Circulating Fluid Temperature Controller
Thermo-chiller Inverter Type

HRSH Series

(UL Standards)

RoHS

Outstanding energy saving due to with the triple inverter!

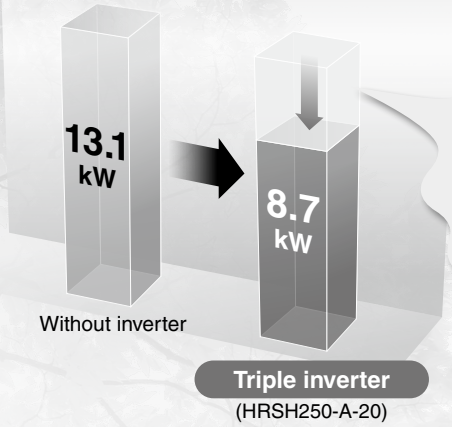

Power consumption reduced by **34%**[*1] (Energy saving)

Triple inverter

- DC inverter compressor
- DC inverter fan[*2] (For the air-cooled type)
- Inverter pump

- **Cooling capacity** 10 kW, 15 kW, 20 kW, 25 kW, 28 kW
- **Temperature stability** ±0.1°C (When a load is stable)
- **Compact, Space saving**
- **Outdoor installation, Splashproof type** (IPX4)[*3]
- **Low-noise design** Operating noise Max. 68 dB (Except HRSH300-A)
- **Ambient temperature** −20 to 45°C (For the air-cooled type)
- **Maintenance-free pump**
  A mechanical sealless **immersion pump** is used.
  No need to replace the seal → Reduced maintenance labor

Compatible with power supplies in Europe, Asia, Oceania, and North, Central, and South America

- 3-phase 200 VAC
- 3-phase 400 VAC

*1 Under the conditions shown on page 311
*2 For the water-cooled type, a water-regulating valve is used for the facility water flow control instead of a fan.
*3 For unexpected natural phenomena, such as stormy weather exceeding the IPX4 level, make sure to take additional protective measures.

Triple inverter

The inverter respectively controls the number of motor rotations of the compressor, fan and pump depending on the load from the user's equipment.

Power consumption reduced by 34%*1 compared with a thermo-chiller without the inverter

With the inverter, it is possible to operate with the same performance even with the power supply of 50 Hz.

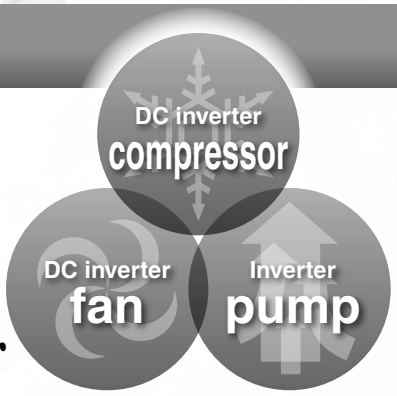

(The water-cooled type is not equipped with a fan.)

*1 For HRSH250-A-20

Conditions
- Outdoor air temperature: 32°C ● Circulating fluid temperature setting: 20°C ● Heat load in the user's equipment: 25 kW ● Power supply: 200 V 60 Hz
- Circulating fluid flow rate: 60 L/min at 0.5 MPa to the user's equipment ● External piping: The shortest distance assumed to the user's equipment
- Values shown in the graph for a thermo-chiller without inverter are found by calculation based on an assumption that a thermo-chiller is operated with a general refrigerant circuit that controls the compressor by turning the power ON/OFF, and with a bypass to the circulating fluid circuit.

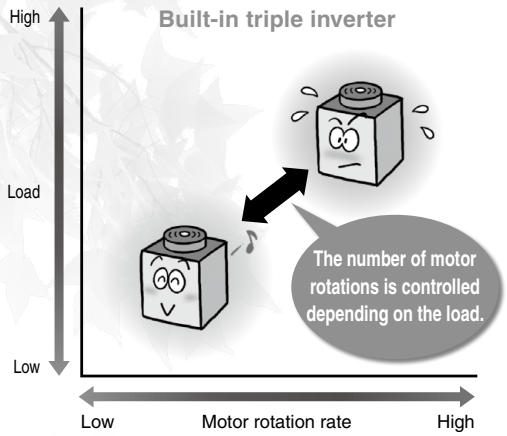

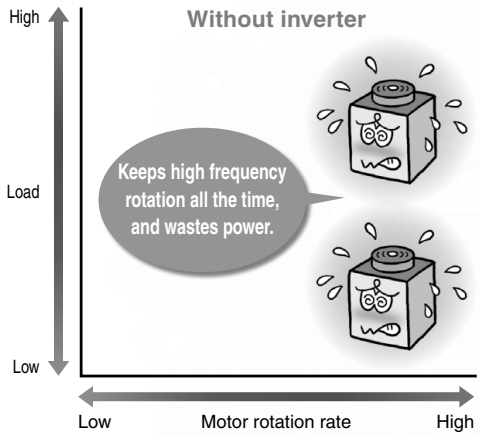

Variations

Cooling capacities ranging from 10 kW to 25 kW

Air-cooled refrigeration

Model		HRSH100-A	HRSH150-A	HRSH200-A
Cooling capacity		10.5 kW	15.7 kW	20.5 kW
Power supply	-20	3-phase 200 VAC (50 Hz), 3-phase 200 to 230 VAC (60 Hz)		
	-40	3-phase 380 to 415 VAC (50/60 Hz) 3-phase 460 to 480 VAC (60 Hz)		
Set temp. range		5 to 35°C		
Temp. stability		±0.1°C		

Model		HRSH250-A	HRSH300-A
Cooling capacity		25 kW	28 kW
Power supply	-20	3-phase 200 VAC (50 Hz), 3-phase 200 to 230 VAC (60 Hz)	
	-40	3-phase 380 to 415 VAC (50/60 Hz), 3-phase 460 to 480 VAC (60 Hz)	
Set temp. range		5 to 35°C	
Temp. stability		±0.1°C	

Water-cooled refrigeration

Model		HRSH100-W	HRSH150-W	HRSH200-W	HRSH250-W
Cooling capacity		11.5 kW	15.7 kW	20.6 kW	24 kW
Power supply	-20	3-phase 200 VAC (50 Hz), 3-phase 200 to 230 VAC (60 Hz)			
	-40	3-phase 380 to 415 VAC (50/60 Hz) 3-phase 460 to 480 VAC (60 Hz)			
Set temp. range		5 to 35°C			
Temp. stability		±0.1°C			

Options
▶Page 330

- With caster adjuster-foot
- With earth leakage breaker (400 V type is equipped as standard.)
- With earth leakage breaker with handle (400 V type is equipped as standard.)
- With fluid fill port
- Compliant with CE/UKCA, UL standards
- SI unit only

Optional accessories
▶Page 334

- Piping conversion fitting
- Caster adjuster-foot kit
- Electric conductivity control set
- Bypass piping set
- Snow protection hood (Air-cooled only)
- Particle filter set
- Wired remote controller

Circuit diagram

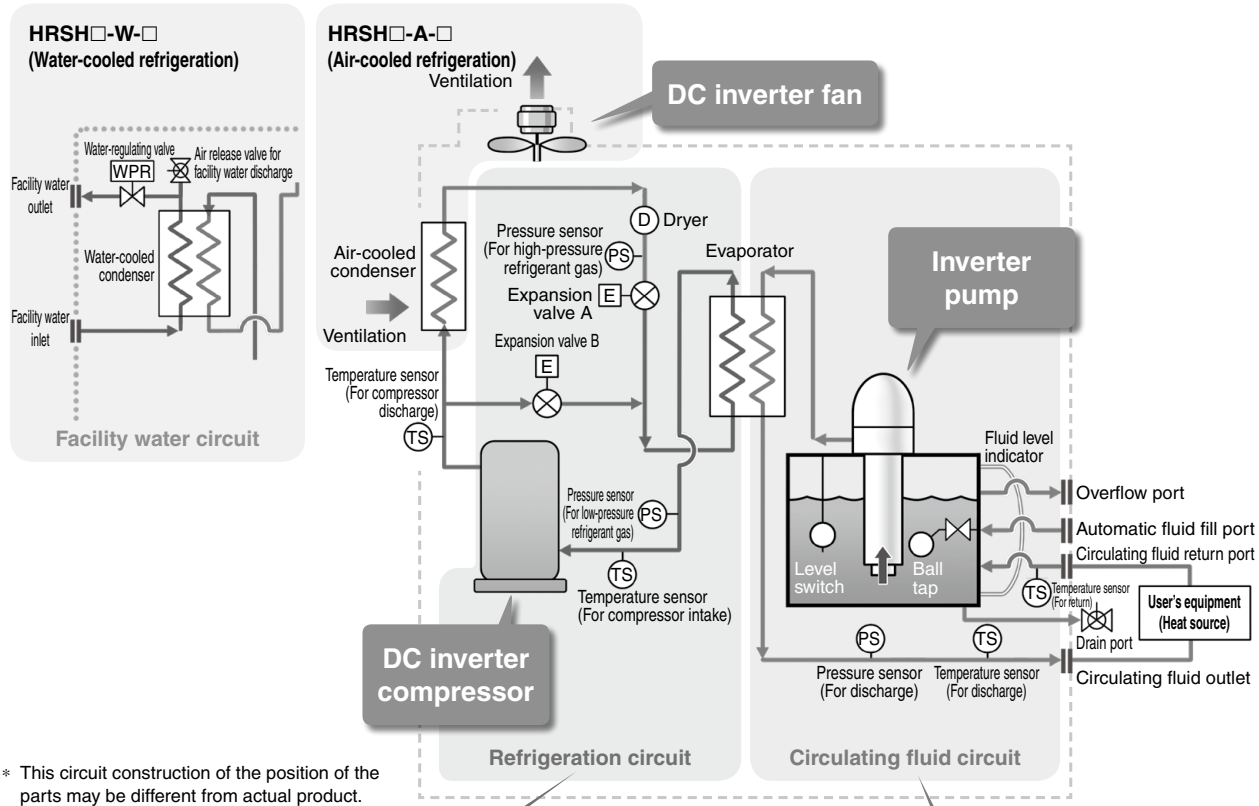

∗ This circuit construction of the position of the parts may be different from actual product.

Refrigeration circuit

- The DC inverter compressor compresses the refrigerant gas and discharges high-temperature, high-pressure refrigerant gas.
- In the case of air-cooled refrigeration, the high-temperature, high-pressure refrigerant gas is cooled down by DC inverter fan ventilation in the air-cooled condenser, where it is then liquefied. In the case of water-cooled refrigeration, the refrigerant gas is cooled by the facility water in the facility water circuit in the water-cooled condenser, where it is then liquefied.
- The liquefied high-pressure refrigerant gas expands and its temperature lowers when it passes through expansion valve A, where it vaporizes after receiving heat from the circulating fluid in the evaporator.
- The vaporized refrigerant gas is sucked into the DC inverter compressor and compressed again.
- When heating the circulating fluid, the high-pressure, high-temperature refrigerant gas is bypassed into the evaporator by expansion valve B to heat the circulating fluid.

POINT

The combination of inverter control of the compressor and fan (facility water flow control by a water-regulating valve is used in water-cooled refrigeration), and the precise control of expansion valves A and B realizes energy saving operation without waste and high temperature stability.

Circulating fluid circuit

- After the circulating fluid discharged from the inverter pump is heated or cooled by the user's equipment, it returns to the tank.
- The circulating fluid is sent to the evaporator by the inverter pump, and is controlled to remain at a set temperature by the refrigeration circuit. It will then be discharged to the user's equipment side again by the thermo-chiller.

POINT

Adjusting the discharge pressure by pump inverter control eliminates wasteful discharge of the circulating fluid and realizes energy saving operation.

POINT

Since the refrigeration circuit is controlled by the signals from 2 temperature sensors (for return and discharge), precise temperature control of the circulating fluid can be achieved. Therefore, there is no need for a tank with a large capacity to absorb the circulating fluid temperature difference, as high temperature stability can be achieved even with a small-size tank. This also contributes to space saving.

Circulating fluid pressure adjustable

Inverter pump

Discharge pressure of the circulating fluid can be set with the operation panel. The inverter pump automatically controls the discharge pressure to the set pressure without adjusting the bypass piping under various piping conditions. Power consumption can be reduced by this control.

(Operation to the set pump operating frequency is also possible.)

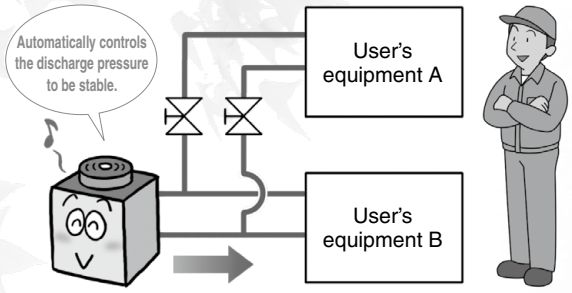

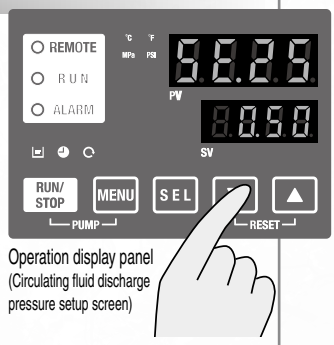

Operation display panel
(Circulating fluid discharge pressure setup screen)

When the product is used with the flow path switched for maintenance, the pressure adjusting function controls the discharge pressure to be stable. (Secure the specified minimum flow for each branch circuit.)

Temperature stability ±0.1°C (When a load is stable)

By controlling the DC inverter compressor, DC inverter fan, and electronic expansion valve simultaneously, it maintains the good temperature stability when the heat load fluctuates.

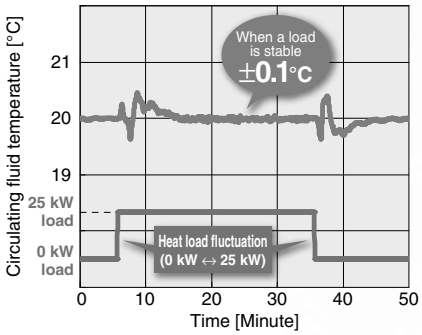

∗ For HRSH250-A-20

Conditions
- Outdoor air temperature: 32°C
- Circulating fluid temperature setting: 20°C
- Heat load in the user's equipment: 25 kW
- Power supply: 200 V 60 Hz
- Circulating fluid flow: 125 L/min at 0.5 MPa
- External piping: Bypass piping + Heat load

Applicable to an ambient temperature of –20°C. (For the air-cooled type)

The product can be installed outdoors even in cold climates, etc.

∗ Before using the product, refer to "Operation at low ambient temperature or low circulating fluid temperature" (page 342).

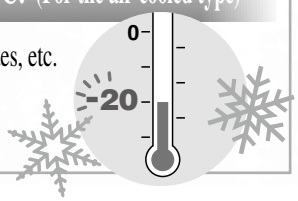

Circulating fluid can be heated without a heater.

As the heating method uses discharged heat, a heater is unnecessary.

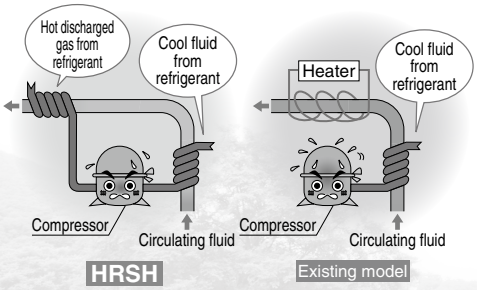

∗ This is just an example diagram.

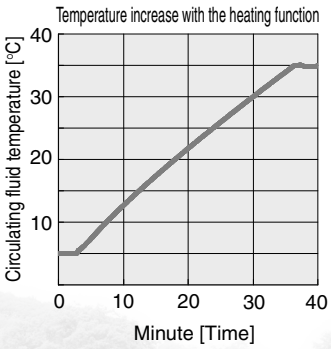

∗ For HRSH250-A-20

Conditions
- Ambient temperature: 5°C
- Power supply: 200 V 60 Hz
- Circulating fluid flow: 125 L/min at 0.5 MPa
- External piping: Bypass piping

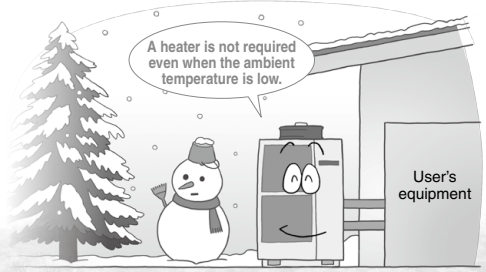

Reduced maintenance hours for the pump

A mechanical sealless immersion pump is used.

As the pump has no external leakage of the circulating fluid, a periodic check of the pump leakage and replacement of the mechanical seal are not necessary. There is no need to exhaust the circulating fluid when removing the pump.

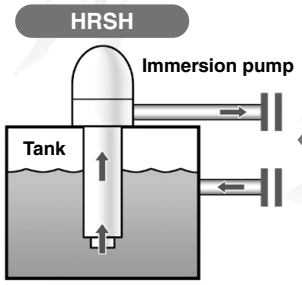

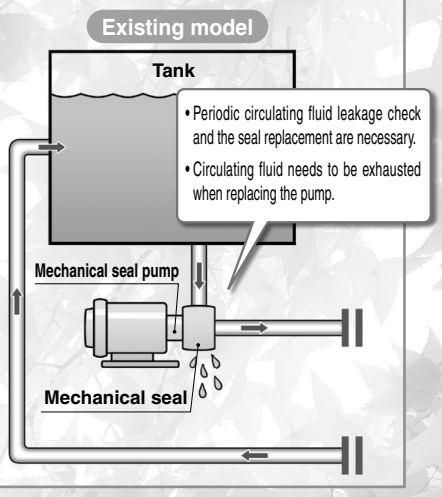

Compact and lightweight 280 kg (For HRSH250-A-20)

Compact tank 60 L (HRSH250-A)

Temperature followability control reduced the tank capacity required as a buffer.

Aluminum air-cooled condenser

High heat transfer efficiency, lightweight

The integrated tank and pump saves space.

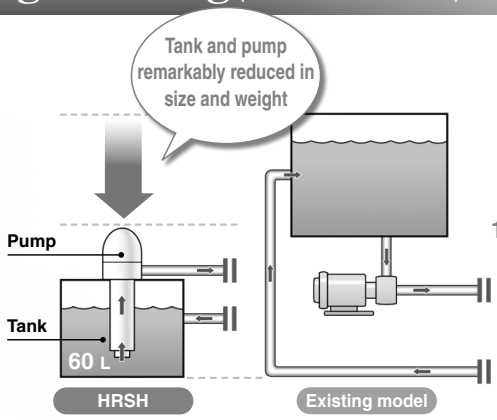

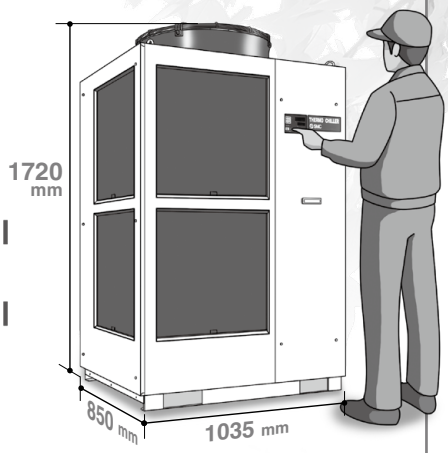

(HRSH250-A)

	Model	Height [mm]	Width [mm]	Depth [mm]	Weight [kg]
Air-cooled refrigeration	HRSH100-A	1420	954	715	180
	HRSH150/200-A	1420	954	715	215
	HRSH250/300-A	1720	1035	850	280
Water-cooled refrigeration	HRSH100-W	1235	687	715	150
	HRSH150/200/250-W	1235	687	715	180

With caster adjuster-foot (Option)

p. 334

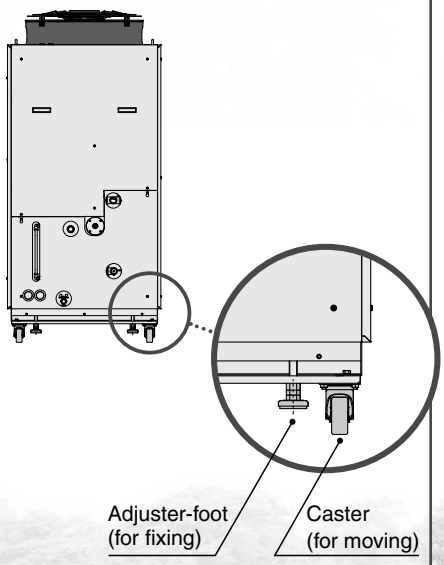

Electric conductivity control set

(With DI filter + Solenoid valve kit for control) p. 335

The electric conductivity of the circulating fluid can be set with the controller monitor arbitrarily.

Set control range: 5.0 to 45.0 μS/cm

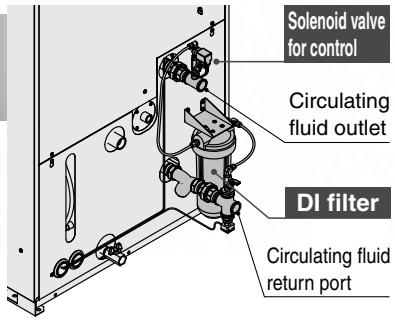

Particle filter set

p. 337

Removes foreign matter in the circulating fluid

Effective in preventing foreign matter from entering the user's equipment and chiller

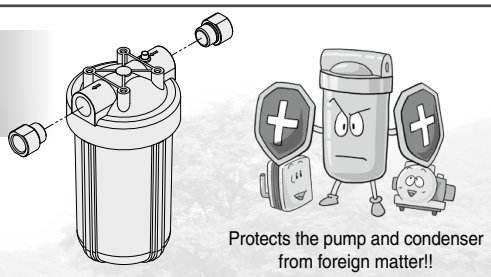

- Prevents pump malfunction
- Prevents the water-cooled condenser performance from falling

IPX4

IP (International Protection) is the industrial standard for "Degrees of protection provided by outer defensive enclosures of electric equipment (IP Code)" according to IEC 60529 and JIS C 0920.

IPX4: No harmful influence by water splash is acceptable from every direction.

Can be installed outdoors

Globally compatible power supplies

(Europe, Asia, Oceania, Central and South America)

Transformer unnecessary

(400 V type only)

Power supply Applicable to 200 to 230 VAC, 380 to 415 VAC, or 460 to 480 VAC

Transformers are unnecessary even when used overseas.

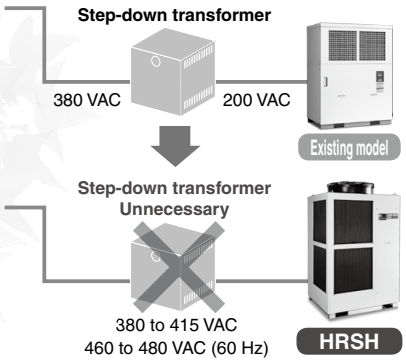

Wired remote controller

(Optional accessory on page 338)

Operable from a distance

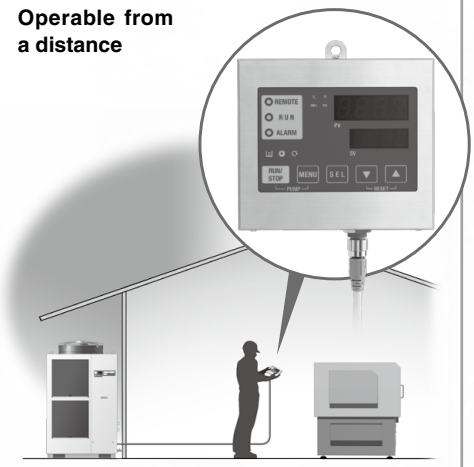

Improved maintenance performance

Fluid fill port for the circulating fluid is available. (Option) p. 331

Fluid fill port is equipped in the upper part of the tank in addition to the automatic fluid fill port for a tap water piping connection.

Front side access

All the electrical components can be checked from the front side for the easier maintenance work.

Alarm code list

Alarm code list stickers (English 1 pc./Japanese 1 pc.) are included. This can be put under the operation panel for reference.

(Alarm ▶ Page 328)

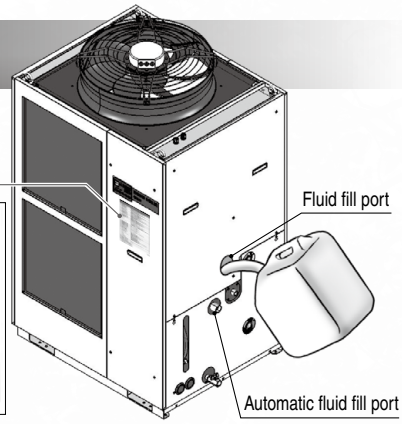

Operation display panel — Easy maintenance with the check display

Alarm codes can be used for the notification of upcoming recommended maintenance.
The codes notify you when it's time to check the pump and fan motor. Helpful for facility maintenance

Ex. AL01 "Low level in tank"

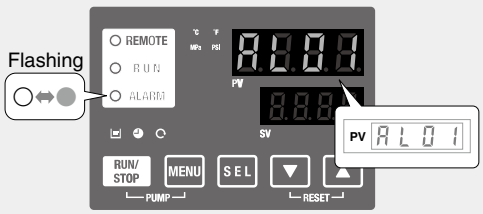

Check display
The internal temperature, pressure, and operating time of the product are displayed.

Ex. drv. "Accumulated operating time"

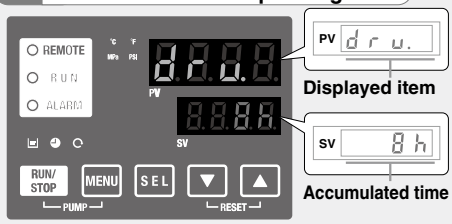

Displayed item	
Temperature	Circulating fluid outlet temperature
	Circulating fluid return temperature
	Compressor gas temperature
Flow rate	Circulating fluid flow rate*1
Pressure	Circulating fluid outlet pressure
	Compressor gas discharge pressure
	Compressor gas return pressure
Operating time	Accumulated operating time
	Accumulated operating time of pump
	Accumulated operating time of fan*2
	Accumulated operating time of compressor
	Accumulated operation time of dustproof filter*2

*1 This is not measurement value. Use it for reference. *2 These are displayed only for air-cooled refrigeration.

Convenient functions Details ▶ Page 328 Timer function, Anti-freezing function, Power failure auto-restart function, Warming-up function, Key-lock function, etc.

Power supply (24 VDC) available

Power can be supplied from the terminal block on the rear side to external switches, etc.

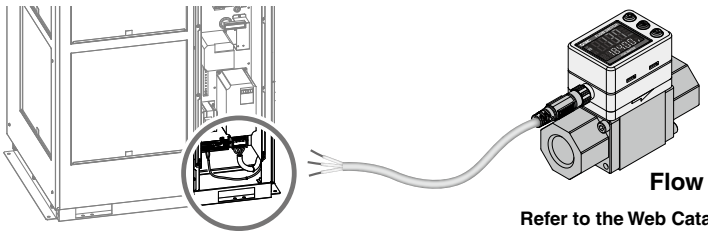

Flow switch

Refer to the Web Catalog for details.

Communication function

Serial communication (RS232C/RS485) and contact I/Os (2 inputs and 3 outputs) are equipped as standard. This allows for communication with the user's equipment and system construction, depending on the application. A 24 VDC output can be also provided and is available for use with flow switches (SMC's PF3W, etc.).

Ex.1 Remote signal I/O through serial communication

Remote operation is enabled (to start and stop operation) through serial communication.

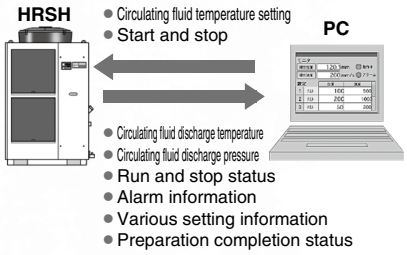

Ex.2 Remote operation signal input

One of the contact inputs is used for remote operation and the other is used to monitor the flow of a flow switch. This is where their alarm outputs are taken in.

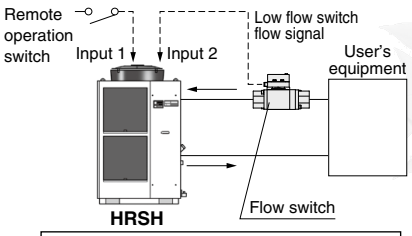

Power for flow switches (24 VDC) can be supplied by the thermo-chiller.

Ex.3 Alarm and operation status (start, stop, etc.) signal output

The alarm and status generated in the product are assigned to 3 output signals based on their contents, which can then be output.

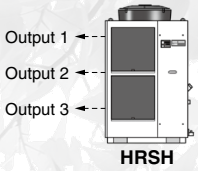

• **Output setting example**
Output 1: Temperature rise
Output 2: Pressure rise
Output 3: Operation status (start, stop, etc.)

CONTENTS

HRSH Series Inverter Type

Thermo-chiller HRSH Series

How to Order/Specifications

- Air-cooled 200 V ..... Page 319
- Water-cooled 200 V ..... Page 320
- Air-cooled 400 V ..... Page 321
- Water-cooled 400 V ..... Page 322

Cooling Capacity ..... Page 323
Pump Capacity ..... Page 324
Dimensions ..... Page 325
Recommended External Piping Flow ..... Page 327
Cable Specifications ..... Page 327
Operation Display Panel ..... Page 328
List of Function ..... Page 328
Alarm ..... Page 328
Communication Functions ..... Page 329

Options

With Caster Adjuster-foot ..... Page 330
With Earth Leakage Breaker ..... Page 330
With Earth Leakage Breaker with Handle ..... Page 331
With Fluid Fill Port ..... Page 331
Applicable to Deionized Water Piping ..... Page 332
Compliant with CE/UKCA, UL Standards ..... Page 332
High-Pressure Pump Mounted ..... Page 333
SI Unit Only ..... Page 333

Optional Accessories

① Piping Conversion Fitting ..... Page 334
② Caster Adjuster-foot Kit ..... Page 334
③ Electric Conductivity Control Set ..... Page 335
④ Bypass Piping Set ..... Page 335
⑤ Snow Protection Hood ..... Page 336
⑥ Particle Filter Set ..... Page 337
⑦ Wired Remote Controller ..... Page 338

Cooling Capacity Calculation

Required Cooling Capacity Calculation ..... Page 339
Precautions on Cooling Capacity Calculation ..... Page 340
Circulating Fluid Typical Physical Property Values ..... Page 340

Specific Product Precautions ..... Page 341

Applications p. 16 | Circulating Fluid/Facility Water Line Equipment p. 21 | Maintenance Service p. 23

Thermo-chiller Inverter Type
Air-cooled 200 V Type
HRSH Series

(UL Standards)

RoHS

How to Order

HRSH 250 – A □ – 20 – □

Cooling method

A	Air-cooled refrigeration

Pipe thread type

Nil	Rc
F	G (with Rc-G conversion fitting)
N	NPT (with Rc-NPT conversion fitting)

Cooling capacity

100	10.5 kW
150	15.7 kW
200	20.5 kW
250	25 kW
300	28 kW

Power supply

20	3-phase 200 VAC (50 Hz) 3-phase 200 to 230 VAC (60 Hz)

Option

Nil	None	**K**∗1	With fluid fill port
A	With caster adjuster-foot	**M**	Applicable to DI water piping
B	With earth leakage breaker	**S**∗2	Compliant with CE/UKCA, UL Standards
B1	With earth leakage breaker with handle	**W**	SI unit only

- When multiple options are combined, indicate symbols in alphabetical order.

∗1 This is a manual fluid fill port that is different from the automatic fluid fill port. Fluid can be supplied manually into the tank without removing the side panel.
(Fluid can be supplied manually for models without option K if the side panel is removed.)

∗2 Combination with option B or option B1 is not necessary. The earth leakage breaker with a handle (-B1) is provided as standard.

Specifications

Model				HRSH100-A□-20-□	HRSH150-A□-20-□	HRSH200-A□-20-□	HRSH250-A□-20-□	HRSH300-A□-20-□
Cooling method				Air-cooled refrigeration				
Refrigerant				R410A (HFC)				
Refrigerant charge			kg	1.27	2.1	2.1	2.8	2.8
Control method				PID control				
Ambient temperature/Altitude∗1, 9			°C	Temperature: –20 to 45, Altitude: less than 3000 m				
Circulating fluid system	**Circulating fluid**∗1, 2			Tap water, 15 to 40% Ethylene glycol aqueous solution, Deionized water				
	Set temperature range∗1		°C	5 to 35				
	Cooling capacity∗3, 9		kW	10.5	15.7	20.5	25	28
	Heating capacity∗4		kW	2.5	3	5.5	7.5	
	Temperature stability∗5		°C	±0.1				
	Pump capacity	**Rated flow (Outlet)**	L/min	45 (0.43 MPa)	45 (0.45 MPa)		125 (0.5 MPa)	
		Maximum flow rate	L/min	120	130		180	
		Maximum pump head	m	50			80	
	Settable pressure range∗6		MPa	0.1 to 0.5			0.1 to 0.8	
	Minimum operating flow rate∗7		L/min	20	25		40	
	Tank capacity		L	25	42		60	
	Circulating fluid outlet, circulating fluid return port			Rc1 (Symbol F: G1, Symbol N: NPT1)				
	Tank drain port			Rc3/4 (Symbol F: G3/4, Symbol N: NPT3/4)				
	Automatic fluid fill system (Standard)	**Supply side pressure range**	MPa	0.2 to 0.5				
		Supply side fluid temperature	°C	5 to 35				
		Automatic fluid fill port		Rc1/2 (Symbol F: G1/2, Symbol N: NPT1/2)				
		Overflow port		Rc1 (Symbol F: G1, Symbol N: NPT1)				
	Fluid contact material		**Metal**	Stainless steel, Copper (Heat exchanger brazing), Brass, Bronze				
			Resin	PTFE, PU, FKM, EPDM, PVC, NBR, POM, PE, NR				
Electrical system	**Power supply**			3-phase 200 VAC (50 Hz), 3-phase 200 to 230 VAC (60 Hz) Allowable voltage range ±10% (No continuous voltage fluctuation)				
	Applicable earth∗8 **leakage breaker**	**Rated current**	A	30		40	50	
		Sensitivity of leak current	mA	30				
	Rated operating current∗5		A	14	17	25	34	36
	Rated power consumption∗5		kW (kVA)	4.5 (4.9)	5.8 (6)	8.4 (8.7)	10.4 (11.6)	11.1 (12.2)
Noise level (Front 1 m/Height 1 m)∗5			dB (A)	68				71
Waterproof specification				IPX4				
Accessories				Alarm code list stickers 2 pcs. (English 1 pc./Japanese 1 pc.), Operation Manual (for installation/operation) 2 pcs. (English 1 pc./Japanese 1 pc.), Y-strainer (40 meshes) 25A, Barrel nipple 25A, Anchor bolt fixing brackets 2 pcs. (including 6 M8 bolts)∗10				
Weight (dry state)			kg	Approx. 180	Approx. 215		Approx. 280	

∗1 When the ambient temperature or circulating fluid temperature is 10°C or below, refer to "Operation at low ambient temperature or low circulating fluid temperature" (page 342).

∗2 Use fluid in condition below as the circulating fluid.
Tap water: please refer to "Specific Product Precautions".
15 to 40% ethylene glycol aqueous solution: Diluted with clean water, without any additives such as antiseptics. (Refer to "Operation at low ambient temperature or low circulating fluid temperature" (page 342) for the concentration of the ethylene glycol aqueous solution.)
Deionized water: Electric conductivity 1 μS/cm or higher (Electric resistivity 1 MΩ·cm or lower)

∗3 ① Ambient temperature: 32°C, ② Circulating fluid: Tap water, ③ Circulating fluid temperature: 20°C, ④ Circulating fluid flow rate: Rated flow, ⑤ Power supply: 200 VAC

∗4 ① Ambient temperature: 32°C, ② Circulating fluid: Tap water, ③ Circulating fluid flow rate: Rated flow, ④ Power supply: 200 VAC

∗5 ① Ambient temperature: 32°C, ② Circulating fluid: Tap water, ③ Circulating fluid temperature: 20°C, ④ Load: Same as the cooling capacity, ⑤ Circulating fluid flow rate: Rated flow, ⑥ Power supply: 200 VAC, ⑦ Piping length: Shortest

∗6 With the pressure control mode by inverter. When the pressure control mode is not used, the pump power frequency set mode can be used.

∗7 Fluid flow rate to maintain the cooling capacity and the temperature stability. If the actual flow rate is lower than this, install a bypass piping.

∗8 To be prepared by the user. A specified earth leakage breaker is installed for option B [With earth leakage breaker], B1 [With earth leakage breaker with handle] and S [Compliant with CE/UKCA, UL Standards].

∗9 If the product is used at an altitude of 1000 m or higher, refer to "Operating Environment/Storage Environment" (page 341) Item 13 "For altitudes of 1000 m or higher."

∗10 The anchor bolt fixing brackets (including 6 M8 bolts) are used for fixing to wooden skids when packaging the thermo-chiller. No anchor bolt is included.

Thermo-chiller Inverter Type
Water-cooled 200 V Type
HRSH Series

How to Order

HRSH 250 – W □ – 20 – □

Cooling capacity

100	11.5 kW
150	15.7 kW
200	20.6 kW
250	24 kW

Cooling method

W	Water-cooled refrigeration

Pipe thread type

Nil	Rc
F	G (with Rc-G conversion fitting)
N	NPT (with Rc-NPT conversion fitting)

Power supply

20	3-phase 200 VAC (50 Hz) 3-phase 200 to 230 VAC (60 Hz)

Option

Nil	None	M	Applicable to DI water piping
A	With caster adjuster-foot	S*2	Compliant with CE/UKCA, UL Standards
B	With earth leakage breaker	T	High-pressure pump mounted
B1	With earth leakage breaker with handle	W	SI unit only
K*1	With fluid fill port		

- When multiple options are combined, indicate symbols in alphabetical order.

*1 This is a manual fluid fill port that is different from the automatic fluid fill port. Fluid can be supplied manually into the tank without removing the side panel. (Fluid can be supplied manually for models without option K if the side panel is removed.)

*2 Combination with option B or option B1 is not necessary. The earth leakage breaker with a handle (-B1) is provided as standard.

Specifications

Model				HRSH100-W□-20-□	HRSH150-W□-20-□	HRSH200-W□-20-□	HRSH250-W□-20-□
Cooling method				Water-cooled refrigeration			
Refrigerant				R410A (HFC)			
Refrigerant charge			kg	1.45	1.95	1.95	1.95
Control method				PID control			
Ambient temperature/Altitude*1, 9			°C	Temperature: 2 to 45, Altitude: less than 3000 m			
Circulating fluid system	Circulating fluid*2			Tap water, 15% Ethylene glycol aqueous solution, Deionized water			
	Set temperature range*1		°C	5 to 35			
	Cooling capacity*3, 9		kW	11.5	15.7	20.6	24
	Heating capacity*4		kW	2.5	3.5	4.0	7.2
	Temperature stability*5		°C	±0.1			
	Pump capacity	Rated flow (Outlet)	L/min	45 (0.43 MPa)	45 (0.45 MPa)		
		Maximum flow rate	L/min	120	130		
		Maximum pump head	m	50			
	Settable pressure range*6		MPa	0.1 to 0.5			
	Minimum operating flow rate*7		L/min	20	25		
	Tank capacity		L	25	42		
	Circulating fluid outlet, circulating fluid return port			Rc1 (Symbol F: G1, Symbol N: NPT1)			
	Tank drain port			Rc3/4 (Symbol F: G3/4, Symbol N: NPT3/4)			
	Automatic fluid fill system (Standard)	Supply side pressure range	MPa	0.2 to 0.5			
		Supply side fluid temperature	°C	5 to 35			
		Automatic fluid fill port		Rc1/2 (Symbol F: G1/2, Symbol N: NPT1/2)			
		Overflow port		Rc1 (Symbol F: G1, Symbol N: NPT1)			
	Fluid contact material		Metal	Stainless steel, Copper (Heat exchanger brazing), Bronze, Brass			
			Resin	PTFE, PU, FKM, EPDM, PVC, NBR, POM, PE, NR			
Facility water system	Supply side pressure range		MPa	0.3 to 0.5			
	Supply side temperature range		°C	5 to 40			
	Required flow*11		L/min	25	30	50	55
	Facility water pressure differential		MPa	0.3 or more			
	Facility water inlet/outlet			Rc1 (Symbol F: G1, Symbol N: NPT1)			
	Fluid contact material		Metal	Stainless steel, Copper (Heat exchanger brazing), Bronze, Brass			
			Resin	PTFE, EPDM, NBR			
Electrical system	Power supply			3-phase 200 VAC (50 Hz), 3-phase 200 to 230 VAC (60 Hz), Allowable voltage range ±10% (No continuous voltage fluctuation)			
	Applicable earth*8 leakage breaker	Rated current	A	30		40	50
		Sensitivity of leak current	mA	30			
	Rated operating current*5		A	14	17	21	25
	Rated power consumption*5		kW (kVA)	4.2 (4.7)	5.3 (5.8)	6.6 (7.0)	8.0 (8.4)
Noise level (Front 1 m/Height 1 m)*5			dB (A)	61	60		61
Waterproof specification				IPX4			
Accessories				Alarm code list stickers 2 pcs. (English 1 pc./Japanese 1 pc.), Operation Manual (for installation/operation) 2 pcs. (English 1 pc./Japanese 1 pc.), Y-strainer (40 meshes) 25A, Barrel nipple 25A, Anchor bolt fixing brackets 2 pcs. (including 6 M8 bolts)*10			
Weight (dry state)			kg	Approx. 150	Approx. 180		

*1 Use a 15% ethylene glycol aqueous solution if operating in a place where the ambient temperature and/or circulating fluid temperature is 10°C or less.
*2 Use fluid in condition below as the circulating fluid.
Tap water: please refer to "Specific Product Precautions".
15% ethylene glycol aqueous solution: diluted by tap water in condition above without any additives such as antiseptics. Deionized water: Electric conductivity 1 μS/cm or higher (Electric resistivity 1 MΩ·cm or lower)
*3 ① Facility water temperature: 32°C, ② Circulating fluid: Tap water, ③ Circulating fluid temperature: 20°C, ④ Circulating fluid flow rate: Rated flow, ⑤ Power supply: 200 VAC
*4 ① Facility water temperature: 32°C, ② Circulating fluid: Tap water, ③ Circulating fluid flow rate: Rated flow, ④ Power supply: 200 VAC
*5 ① Facility water temperature: 32°C, ② Circulating fluid: Tap water, ③ Circulating fluid temperature: 20°C, ④ Load: Same as the cooling capacity, ⑤ Circulating fluid flow rate: Rated flow, ⑥ Power supply: 200 VAC, ⑦ Piping length: Shortest
*6 With the pressure control mode by inverter. When the pressure control mode is not used, the pump power frequency set mode can be used.
*7 Fluid flow rate to maintain the cooling capacity and the temperature stability. If the actual flow rate is lower than this, install a bypass piping.
*8 To be prepared by the user. A specified earth leakage breaker is installed for option B [With earth leakage breaker], B1 [With earth leakage breaker with handle] and S [Compliant with CE/UKCA, UL Standards].
*9 If the product is used at an altitude of 1000 m or higher, refer to "Operating Environment/Storage Environment" (page 341) Item 13 "For altitudes of 1000 m or higher."
*10 The anchor bolt fixing brackets (including 6 M8 bolts) are used for fixing to wooden skids when packaging the thermo-chiller. No anchor bolt is included.
*11 The actual facility water flow rate will vary depending on the operating conditions.

Thermo-chiller Inverter Type
Air-cooled 400 V Type
HRSH Series

How to Order

HRSH 250 – A □ – 40 – □

Cooling capacity

100	10.5 kW
150	15.7 kW
200	20.5 kW
250	25 kW
300	28 kW

Cooling method

A	Air-cooled refrigeration

Pipe thread type

Nil	Rc
F	G (with Rc-G conversion fitting)
N	NPT (with Rc-NPT conversion fitting)

Power supply

40	3-phase 380 to 415 VAC (50/60 Hz) 3-phase 460 to 480 VAC (60 Hz)

Option

Nil*1	None
A	With caster adjuster-foot
K*2	With fluid fill port
M	Applicable to DI water piping
W	SI unit only

*1 400 V type is provided with an earth leakage breaker with handle (-B1) as standard.
*2 This is a manual fluid fill port that is different from the automatic fluid fill port. Fluid can be supplied manually into the tank without removing the side panel. (Fluid can be supplied manually for models without option K if the side panel is removed.)

Specifications

Model				HRSH100-A□-40-□	HRSH150-A□-40-□	HRSH200-A□-40-□	HRSH250-A□-40-□	HRSH300-A□-40-□
Cooling method				Air-cooled refrigeration				
Refrigerant				R410A (HFC)				
Refrigerant charge			kg	1.27	2.1	2.1	2.8	2.8
Control method				PID control				
Ambient temperature/Altitude*1, 8			°C	Temperature: –20 to 45, Altitude: less than 3000 m				
Circulating fluid system	Circulating fluid*1, 2			Tap water, 15 to 40% Ethylene glycol aqueous solution, Deionized water				
	Set temperature range*1		°C	5 to 35				
	Cooling capacity*3, 8		kW	10.5	15.7	20.5	25	28
	Heating capacity*4		kW	2.5	3	5.5	7.5	
	Temperature stability*5		°C	±0.1				
	Pump capacity	Rated flow (Outlet)	L/min	45 (0.43 MPa)	45 (0.45 MPa)		125 (0.5 MPa)	
		Maximum flow rate	L/min	120	130		180	
		Maximum pump head	m	50			80	
	Settable pressure range*6		MPa	0.1 to 0.5			0.1 to 0.8	
	Minimum operating flow rate*7		L/min	20	25		40	
	Tank capacity		L	25	42		60	
	Circulating fluid outlet, circulating fluid return port			Rc1 (Symbol F: G1, Symbol N: NPT1)				
	Tank drain port			Rc3/4 (Symbol F: G3/4, Symbol N: NPT3/4)				
	Automatic fluid fill system (Standard)	Supply side pressure range	MPa	0.2 to 0.5				
		Supply side fluid temperature	°C	5 to 35				
		Automatic fluid fill port		Rc1/2 (Symbol F: G1/2, Symbol N: NPT1/2)				
		Overflow port		Rc1 (Symbol F: G1, Symbol N: NPT1)				
	Fluid contact material		Metal	Stainless steel, Copper (Heat exchanger brazing), Brass, Bronze				
			Resin	PTFE, PU, FKM, EPDM, PVC, NBR, POM, PE, NR				
Electrical system	Power supply			3-phase 380 to 415 VAC (50/60 Hz) Allowable voltage range ±10% (No continuous voltage fluctuation) 3-phase 460 to 480 VAC (60 Hz) Allowable voltage range +4%, –10% (Max. voltage less than 500 V and no continuous voltage fluctuation)				
	Earth leakage breaker (Standard)	Rated current	A	20	30			
		Sensitivity of leak current	mA	30				
	Rated operating current*5		A	7.4	9.3	12.8	16	18
	Rated power consumption*5		kW (kVA)	4.6 (5.1)	5.8 (6.4)	8.2 (8.9)	10.1 (11.1)	10.8 (12.3)
Noise level (Front 1 m/Height 1 m)*5			dB (A)	68				71
Waterproof specification				IPX4				
Accessories				Alarm code list stickers 2 pcs. (English 1 pc./Japanese 1 pc.), Operation Manual (for installation/operation) 2 pcs. (English 1 pc./Japanese 1 pc.), Y-strainer (40 meshes) 25A, Barrel nipple 25A, Anchor bolt fixing brackets 2 pcs. (including 6 M8 bolts)*9				
Weight (dry state)			kg	Approx. 180	Approx. 215		Approx. 280	

*1 When the ambient temperature or circulating fluid temperature is 10°C or below, refer to "Operation at low ambient temperature or low circulating fluid temperature" (page 342).
*2 Use fluid in condition below as the circulating fluid.
Tap water: please refer to "Specific Product Precautions".
15 to 40% ethylene glycol aqueous solution: Diluted with clean water, without any additives such as antiseptics. (Refer to "Operation at low ambient temperature or low circulating fluid temperature" (page 342) for the concentration of the ethylene glycol aqueous solution.)
Deionized water: Electric conductivity 1 μS/cm or higher (Electric resistivity 1 MΩ·cm or lower)
*3 ① Ambient temperature: 32°C, ② Circulating fluid: Tap water, ③ Circulating fluid temperature: 20°C, ④ Circulating fluid flow rate: Rated flow, ⑤ Power supply: 400 VAC
*4 ① Ambient temperature: 32°C, ② Circulating fluid: Tap water, ③ Circulating fluid flow rate: Rated flow, ④ Power supply: 400 VAC
*5 ① Ambient temperature: 32°C, ② Circulating fluid: Tap water, ③ Circulating fluid temperature: 20°C, ④ Load: Same as the cooling capacity, ⑤ Circulating fluid flow rate: Rated flow, ⑥ Power supply: 400 VAC, ⑦ Piping length: Shortest
*6 With the pressure control mode by inverter. When the pressure control mode is not used, the pump power frequency set mode can be used.
*7 Fluid flow rate to maintain the cooling capacity and the temperature stability. If the actual flow rate is lower than this, install a bypass piping.
*8 If the product is used at an altitude of 1000 m or higher, refer to "Operating Environment/Storage Environment" (page 341) Item 13 "For altitudes of 1000 m or higher."
*9 The anchor bolt fixing brackets (including 6 M8 bolts) are used for fixing to wooden skids when packaging the thermo-chiller. No anchor bolt is included.

Thermo-chiller Inverter Type
Water-cooled 400 V Type
HRSH Series

How to Order

HRSH 250 – W □ – 40 – □

Cooling capacity

100	11.5 kW
150	15.7 kW
200	20.6 kW
250	24 kW

Cooling method

W	Water-cooled refrigeration

Pipe thread type

Nil	Rc
F	G (with Rc-G conversion fitting)
N	NPT (with Rc-NPT conversion fitting)

Power supply

40	3-phase 380 to 415 VAC (50/60 Hz) 3-phase 460 to 480 VAC (60 Hz)

Option

Nil*1	None	M	Applicable to DI water piping
A	With caster adjuster-foot	T	High-pressure pump mounted
K*2	With fluid fill port	W	SI unit only

*1 400 V type is provided with an earth leakage breaker with handle (-B1) as standard.
*2 This is a manual fluid fill port that is different from the automatic fluid fill port. Fluid can be supplied manually into the tank without removing the side panel. (Fluid can be supplied manually for models without option K if the side panel is removed.)

Specifications

Model				HRSH100-W□-40-□	HRSH150-W□-40-□	HRSH200-W□-40-□	HRSH250-W□-40-□
Cooling method				Water-cooled refrigeration			
Refrigerant				R410A (HFC)			
Refrigerant charge			kg	1.45	1.95	1.95	1.95
Control method				PID control			
Ambient temperature/Altitude*1, 8			°C	Temperature: 2 to 45, Altitude: less than 3000 m			
Circulating fluid system	Circulating fluid*2			Tap water, 15% Ethylene glycol aqueous solution, Deionized water			
	Set temperature range*1		°C	5 to 35			
	Cooling capacity*3, 8		kW	11.5	15.7	20.6	24
	Heating capacity*4		kW	2.5	3.5	4.0	7.2
	Temperature stability*5		°C	±0.1			
	Pump capacity	Rated flow (Outlet)	L/min	45 (0.43 MPa)	45 (0.45 MPa)		
		Maximum flow rate	L/min	120	130		
		Maximum pump head	m	50			
	Settable pressure range*6		MPa	0.1 to 0.5			
	Minimum operating flow rate*7		L/min	20	25		
	Tank capacity		L	25	42		
	Circulating fluid outlet, circulating fluid return port			Rc1 (Symbol F: G1, Symbol N: NPT1)			
	Tank drain port			Rc3/4 (Symbol F: G3/4, Symbol N: NPT3/4)			
	Automatic fluid fill system (Standard)	Supply side pressure range	MPa	0.2 to 0.5			
		Supply side fluid temperature	°C	5 to 35			
		Automatic fluid fill port		Rc1/2 (Symbol F: G1/2, Symbol N: NPT1/2)			
		Overflow port		Rc1 (Symbol F: G1, Symbol N: NPT1)			
	Fluid contact material		Metal	Stainless steel, Copper (Heat exchanger brazing), Brass, Bronze			
			Resin	PTFE, PU, FKM, EPDM, PVC, NBR, POM, PE, NR			
Facility water system	Temperature range		°C	5 to 40			
	Pressure range		MPa	0.3 to 0.5			
	Required flow*10		L/min	25	30	50	55
	Facility water pressure differential		MPa	0.3 or more			
	Facility water inlet/outlet			Rc1 (Symbol F: G1, Symbol N: NPT1)			
	Fluid contact material		Metal	Stainless steel, Copper (Heat exchanger brazing), Bronze, Brass			
			Resin	PTFE, NBR, EPDM			
Electrical system	Power supply			3-phase 380 to 415 VAC (50/60 Hz) Allowable voltage range ±10% (No continuous voltage fluctuation) 3-phase 460 to 480 VAC (60 Hz) Allowable voltage range +4%, –10% (Max. voltage less than 500 V and no continuous voltage fluctuation)			
	Applicable earth leakage breaker (Standard)	Rated current	A	20	30		
		Sensitivity of leak current	mA	30			
	Rated operating current*5		A	7.3	8.8	10.6	12.8
	Rated power consumption*5		kW (kVA)	4.4 (5.0)	5.3 (6.1)	6.6 (7.4)	8.2 (8.9)
Noise level (Front 1 m/Height 1 m)*5			dB (A)	61	60		61
Waterproof specification				IPX4			
Accessories				Alarm code list stickers 2 pcs. (English 1 pc./Japanese 1 pc.), Operation Manual (for installation/operation) 2 pcs. (English 1 pc./Japanese 1 pc.), Y-strainer (40 meshes) 25A, Barrel nipple 25A, Anchor bolt fixing brackets 2 pcs. (including 6 M8 bolts)*9			
Weight (dry state)			kg	Approx. 150	Approx. 180		

*1 Use a 15% ethylene glycol aqueous solution if operating in a place where the ambient temperature and/or circulating fluid temperature is 10°C or less.
*2 Use fluid in condition below as the circulating fluid.
Tap water: please refer to "Specific Product Precautions".
15% ethylene glycol aqueous solution: diluted by tap water in condition above without any additives such as antiseptics.
Deionized water: Electric conductivity 1 μS/cm or higher (Electric resistivity 1 MΩ·cm or lower)
*3 ① Facility water temperature: 32°C, ② Circulating fluid: Tap water, ③ Circulating fluid temperature: 20°C, ④ Circulating fluid flow rate: Rated flow, ⑤ Power supply: 400 VAC
*4 ① Facility water temperature: 32°C, ② Circulating fluid: Tap water, ③ Circulating fluid flow rate: Rated flow, ④ Power supply: 400 VAC
*5 ① Facility water temperature: 32°C, ② Circulating fluid: Tap water, ③ Circulating fluid temperature: 20°C, ④ Load: Same as the cooling capacity, ⑤ Circulating fluid flow rate: Rated flow, ⑥ Power supply: 400 VAC, ⑦ Piping length: Shortest
*6 With the pressure control mode by inverter. When the pressure control mode is not used, the pump power frequency set mode can be used.
*7 Fluid flow rate to maintain the cooling capacity and the temperature stability. If the actual flow rate is lower than this, install a bypass piping.
*8 If the product is used at an altitude of 1000 m or higher, refer to "Operating Environment/Storage Environment" (page 341) Item 13 "For altitudes of 1000 m or higher."
*9 The anchor bolt fixing brackets (including 6 M8 bolts) are used for fixing to wooden skids when packaging the thermo-chiller. No anchor bolt is included.
*10 The actual facility water flow rate will vary depending on the operating conditions.

Cooling Capacity

* If the product is used at an altitude of 1000 m or higher, refer to "Operating Environment/ Storage Environment" (page 341) Item 13 "For altitudes of 1000 m or higher."

HRSH100-A□-20/40-□

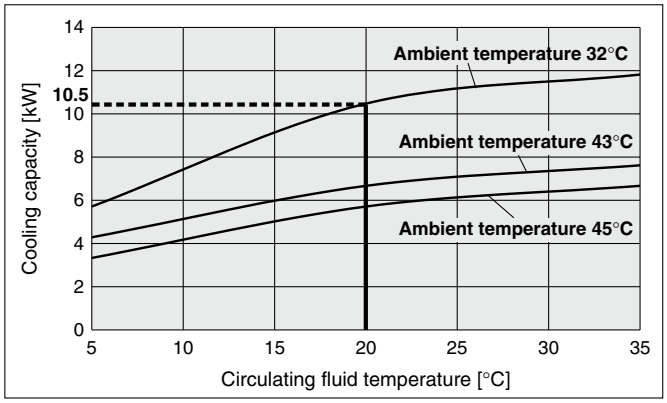

HRSH100-W□-20/40-□

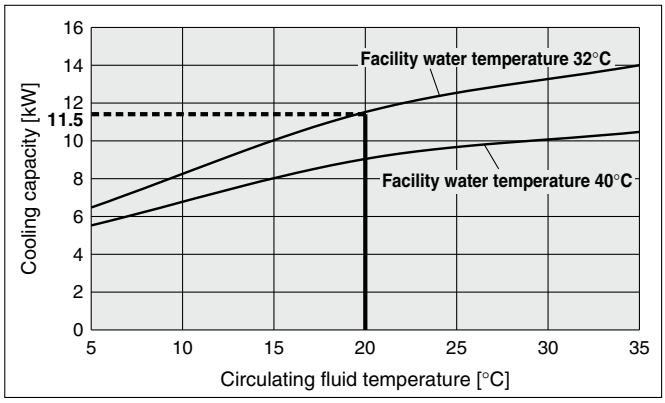

HRSH150-A□-20/40-□

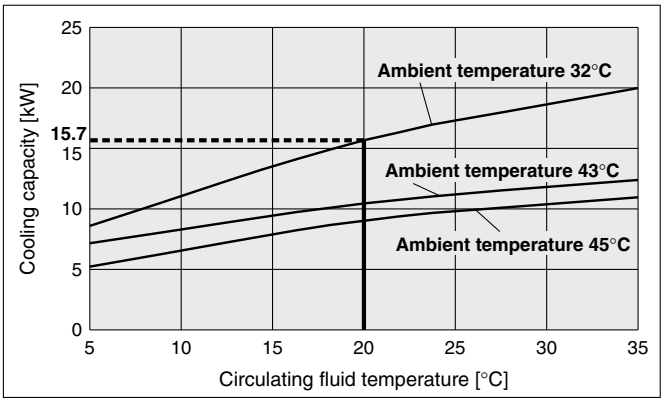

HRSH150-W□-20/40-□

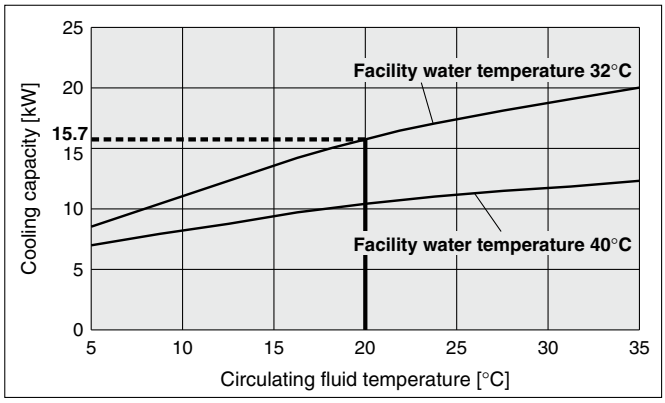

HRSH200-A□-20/40-□

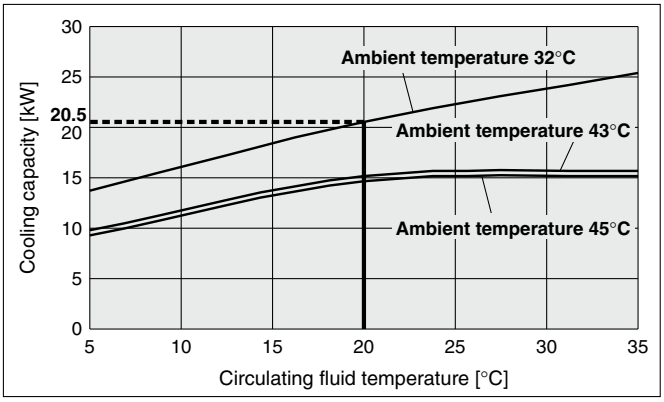

HRSH200-W□-20/40-□

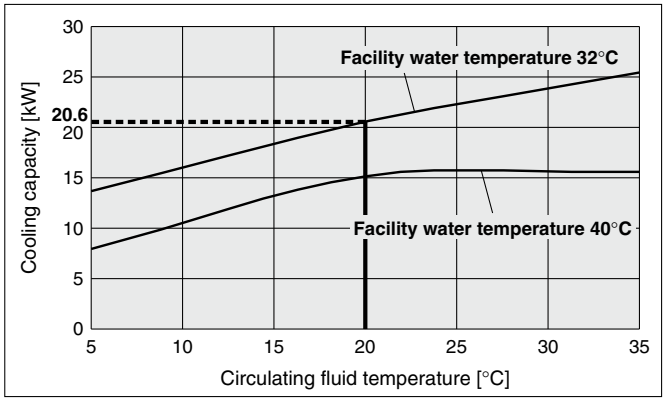

HRSH250-A□-20/40-□

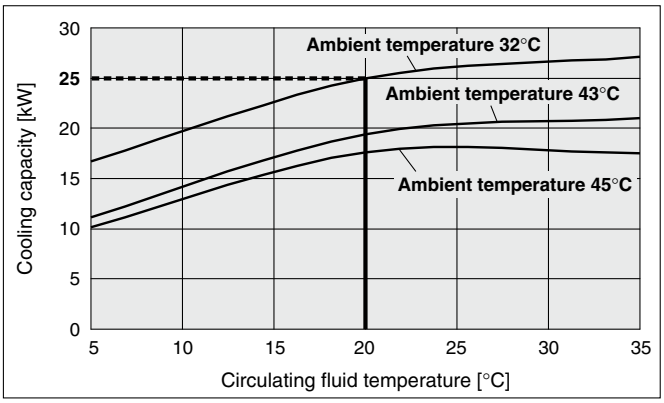

HRSH250-W□-20/40-□

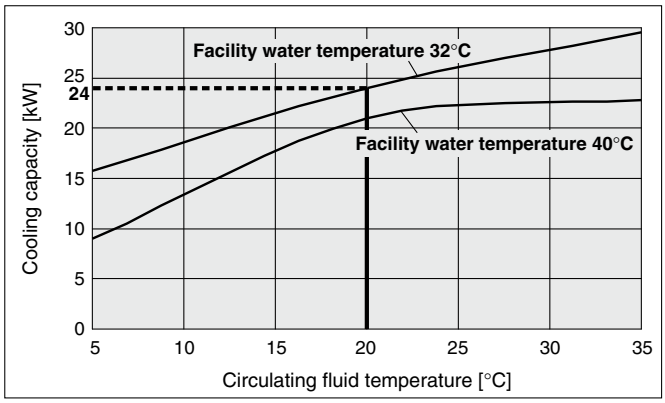

Cooling Capacity

∗ If the product is used at an altitude of 1000 m or higher, refer to "Operating Environment/ Storage Environment" (page 341) Item 13 "For altitudes of 1000 m or higher."

HRSH300-A□-20/40-□

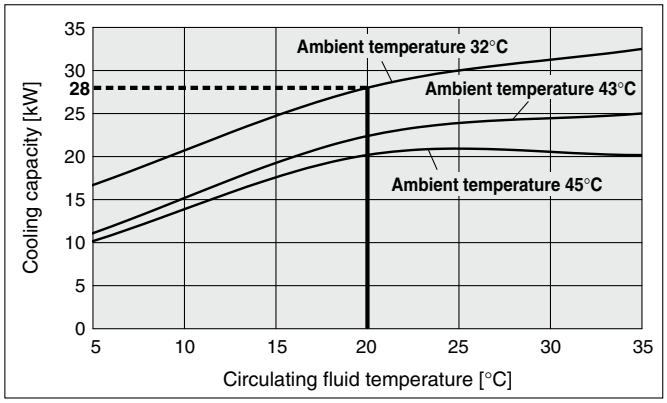

Pump Capacity

HRSH100-A□-20/40-□
HRSH100-W□-20/40-□

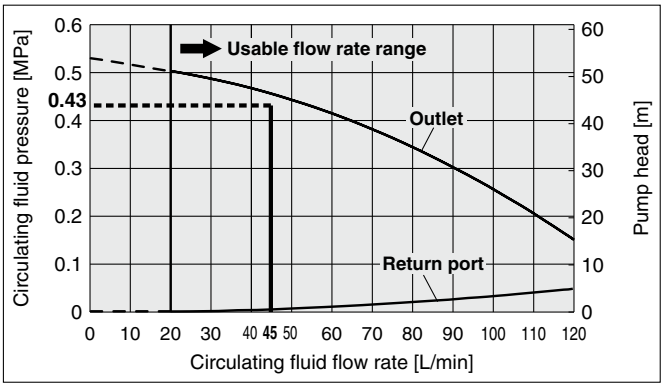

HRSH150/200-A□-20/40-□
HRSH150/200/250-W□-20/40-□

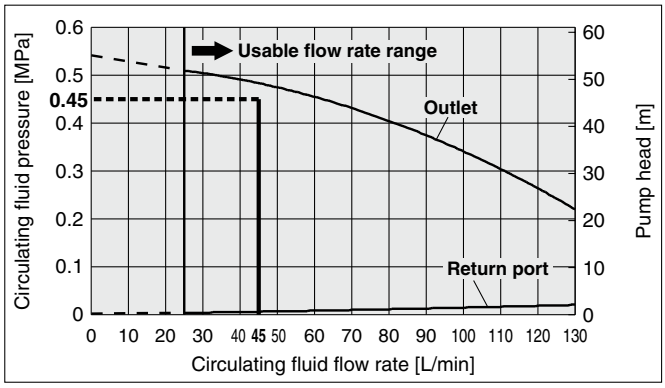

HRSH250/300-A□-20/40-□

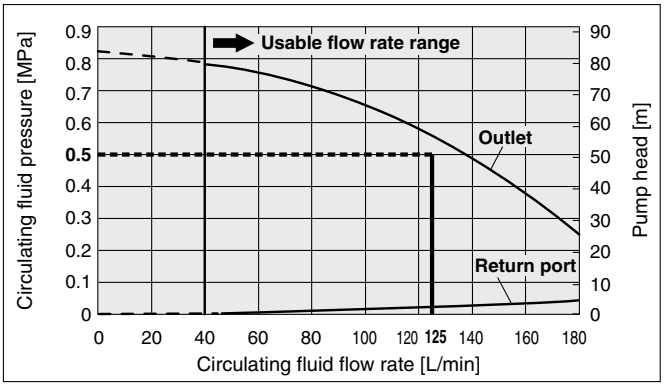

Dimensions

HRSH100/150/200-A-20 (Air-cooled 200 V type)
HRSH100/150/200-A-40 (Air-cooled 400 V type)

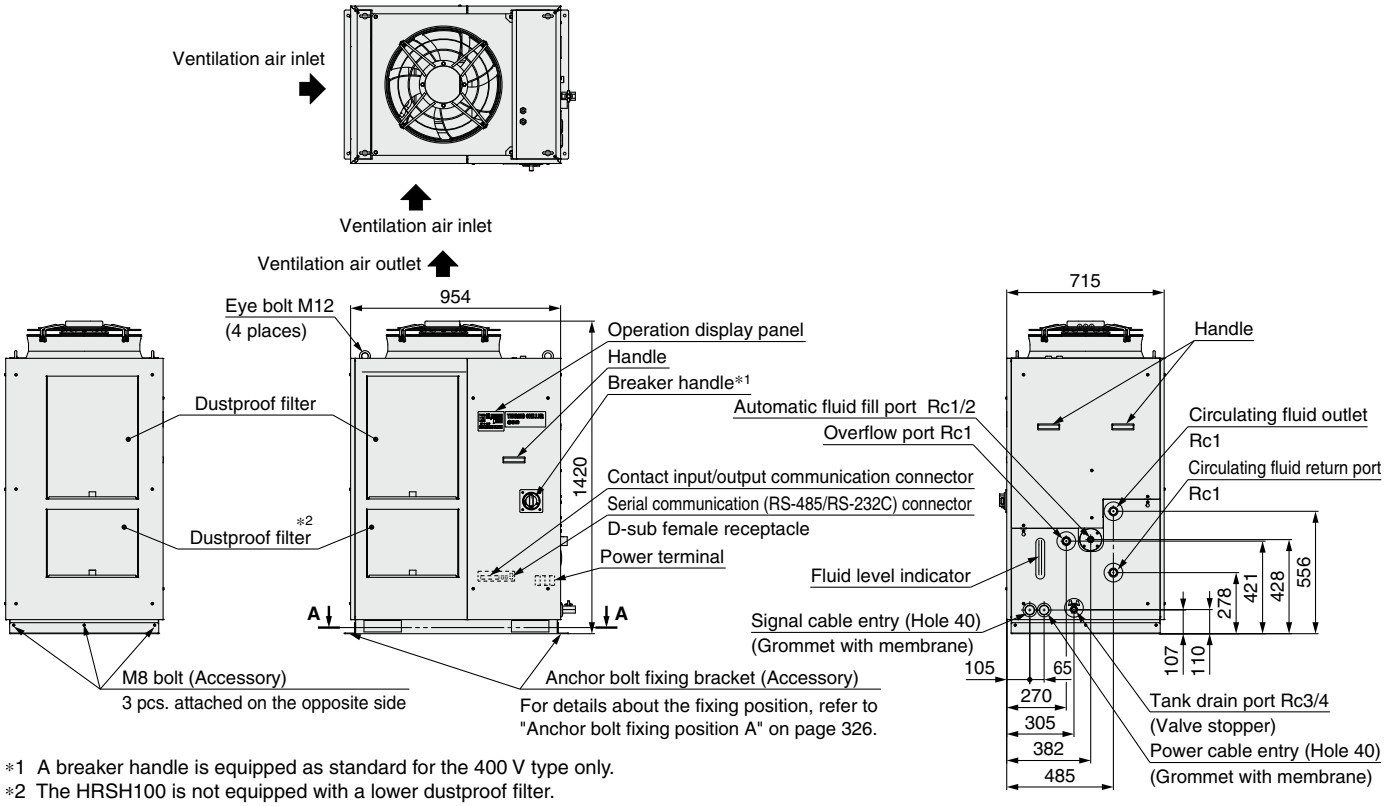

*1 A breaker handle is equipped as standard for the 400 V type only.
*2 The HRSH100 is not equipped with a lower dustproof filter.

HRSH250/300-A-20 (Air-cooled 200 V type)
HRSH250/300-A-40 (Air-cooled 400 V type)

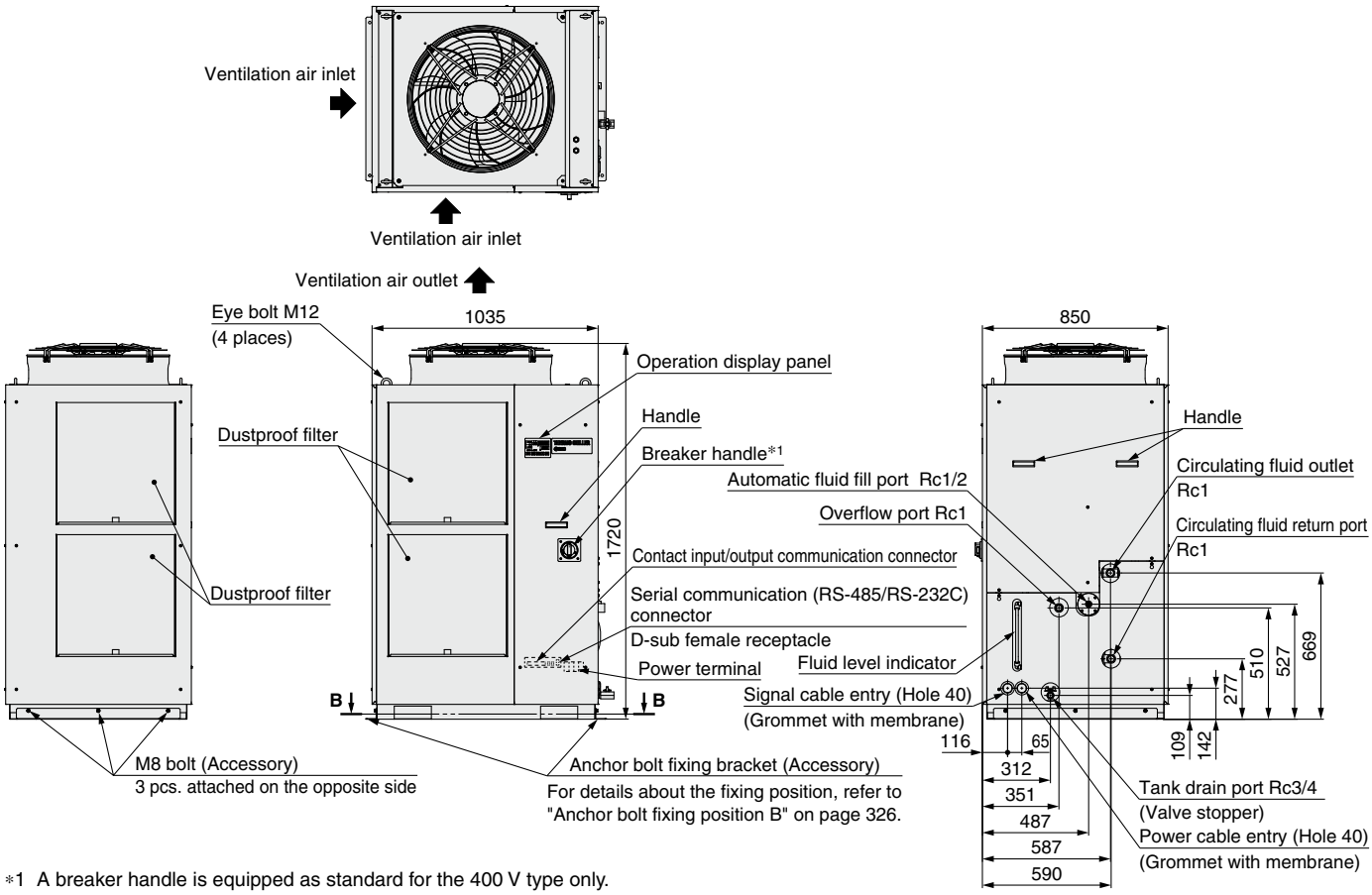

*1 A breaker handle is equipped as standard for the 400 V type only.

Dimensions

HRSH100/150/200/250-W-20 (Water-cooled 200 V type)
HRSH100/150/200/250-W-40 (Water-cooled 400 V type)

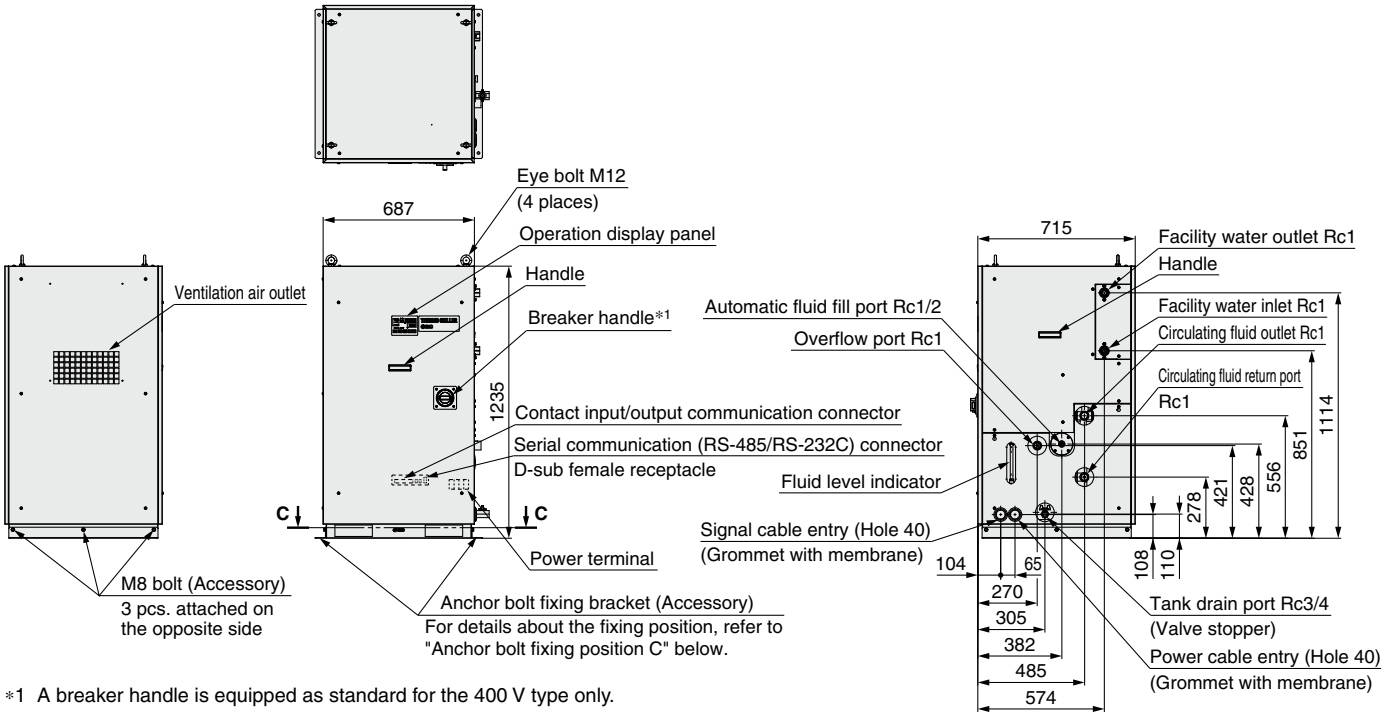

*1 A breaker handle is equipped as standard for the 400 V type only.

Anchor bolt fixing position A

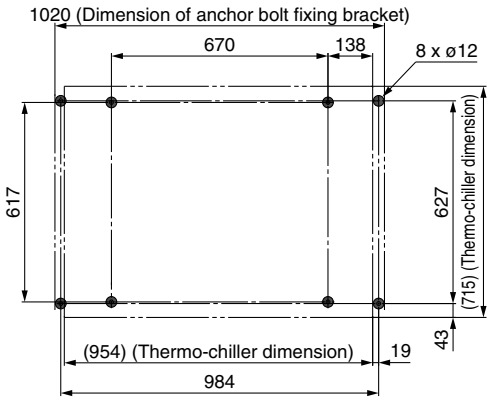

View A-A

Anchor bolt fixing position B

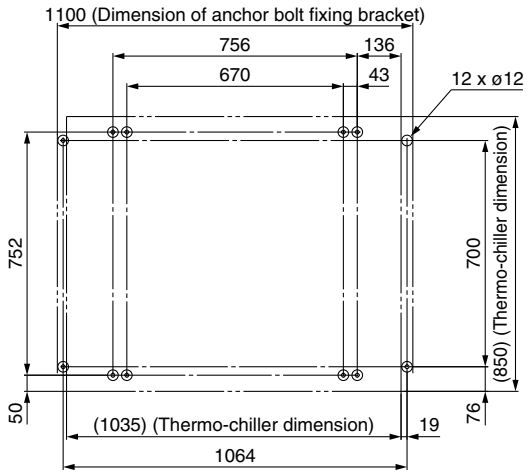

View B-B

Anchor bolt fixing position C

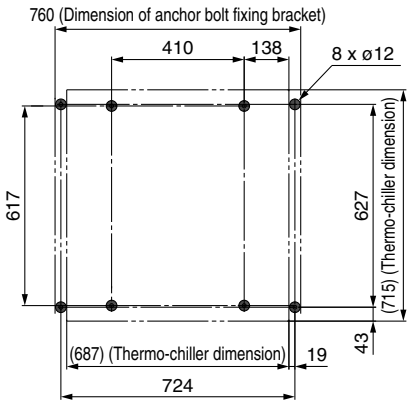

View C-C

Accessory: Y-strainer mounting view

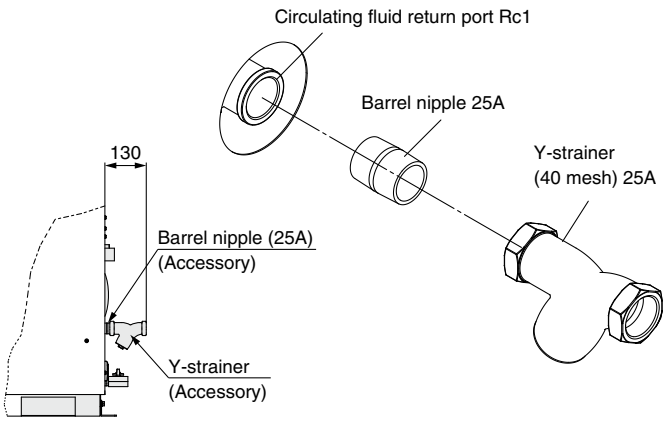

Recommended External Piping Flow

External piping circuit is recommended as shown below.

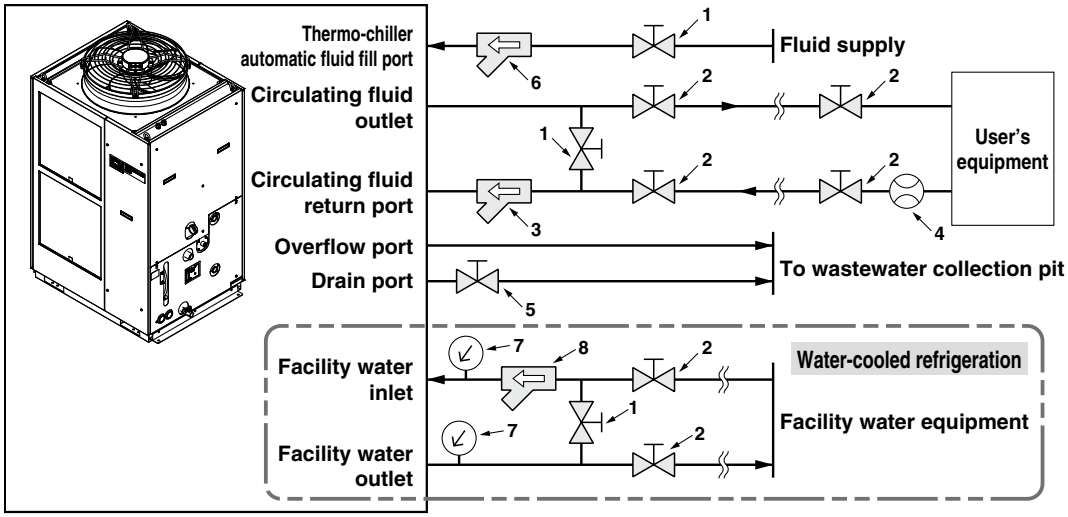

∗ Ensure that the overflow port is connected to the wastewater collection pit in order to avoid damage to the tank of the thermo-chiller.

No.	Description	Size	Recommended part no.	Note
1	Valve	Rc1/2	—	—
2	Valve	Rc1	—	—
3	Y-strainer	Rc1 #40	Accessory	Install either the strainer or filter. If foreign matter with a size of 20 μm or more are likely to enter, install the particle filter. For the recommended filter, refer to the optional accessory HRS-PF005 (page 337).
	Filter	Rc1 20 μm	HRS-PF005∗2	
4	Flow meter	—	—	Prepare a flow meter with an appropriate flow range.
5	Valve (Part of thermo-chiller)	Rc3/4	—	—
6	Y-strainer	Rc1/2 #40	—	Install either the strainer or filter. If foreign matter with a size of 20 μm or more are likely to enter, select and prepare a particle filter.
	Filter	Rc1/2 20 μm	—	
7	Pressure gauge	0 to 1.0 MPa	—	—
8	Y-strainer	Rc1 #40	HRS-S0212	Install either the strainer or filter. If foreign matter with a size of 20 μm or more are likely to enter, install the particle filter. For the recommended filter, refer to the table below (∗1).
	Filter	Rc1 20 μm	Refer to the table below	

∗1 Recommended filters for facility water inlet

Applicable model	Recommended filter
HRSH100/150	FQ1012N-10-T020-B-X61
HRSH200/250	FGESA-10-T020A-G2

∗2 The filter shown above cannot be directly connected to the thermo-chiller. Install it in the user's piping system.

Cable Specifications

Power supply and signal cable should be prepared by user.

Power Cable Specifications

Applicable model	Rated value for thermo-chiller			Power cable examples	
	Power supply	Applicable breaker rated current	Terminal block thread size	Cable size	Crimped terminal on the thermo-chiller side
HRSH100-□□-20 HRSH150-□□-20	3-phase 200 VAC (50 Hz) 3-phase 200 to 230 VAC (60 Hz)	30 A	M5	4 cores x 5.5 mm² (4 cores x AWG10) (Including grounding cable)	R5.5-5
HRSH100-W□-20-T HRSH150-W□-20-T HRSH200-□□-20 HRSH200-W□-20-T		40 A		4 cores x 8 mm² (4 cores x AWG8) (Including grounding cable)	R8-5
HRSH250-□□-20 HRSH250-W□-20-T HRSH300-A□-20		50 A		4 cores x 8 mm² (4 cores x AWG8) (Including grounding cable)	R8-5
HRSH100-□□-40	3-phase 380 to 415 VAC (50/60 Hz) 3-phase 460 to 480 VAC (60 Hz)	20 A		3 x 5.5 mm² (3 x AWG10) (Power supply) 1 x 14 mm² (1 x AWG6) (Grounding cable)	R5.5-5 (Power supply) R14-5 (Grounding cable)
HRSH100-W□-40-T HRSH150-□□-40 HRSH150-W□-40-T HRSH200-□□-40 HRSH200-W□-40-T HRSH250-□□-40 HRSH250-W□-40-T HRSH300-A□-40		30 A			

∗ An example of the cable specifications is when two kinds of vinyl insulated wires with a continuous allowable operating temperature of 70°C at 600 V, are used at an ambient temperature of 30°C. Select the proper size of cable according to an actual condition.

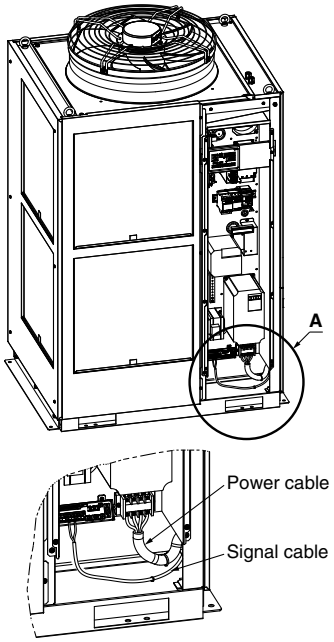

Partially enlarged view A

Signal Cable Specifications

Terminal specifications		Cable specifications
Terminal block screw diameter	Recommended crimped terminal	0.75 mm² (AWG18) Shielded cable
M3	Y-shape crimped terminal 1.25Y-3	

Operation Display Panel

The basic operation of this unit is controlled through the operation display panel on the front of the product.

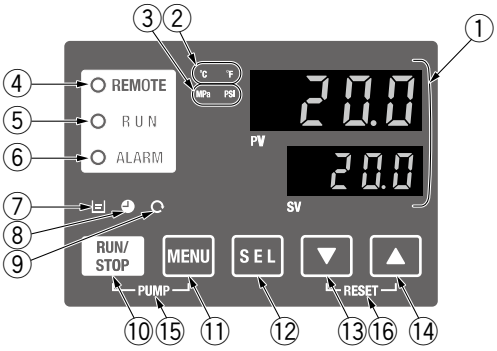

No.	Description	Function	
①	**Digital display (7-segment, 4 digits)**	PV	Displays the circulating fluid current discharge temperature and pressure and alarm codes and other menu items (codes).
		SV	Displays the circulating fluid discharge temperature and the set values of other menus.
②	**[°C] [°F] lamp**	Equipped with a unit conversion function. Displays the unit of displayed temperature (default setting: °C).	
③	**[MPa] [PSI] lamp**	Equipped with a unit conversion function. Displays the unit of displayed pressure (default setting: MPa).	
④	**[REMOTE] lamp**	Enables remote operation (start and stop) by communication. Lights up during remote operation.	
⑤	**[RUN] lamp**	Lights up when the product is started, and goes off when it is stopped. Flashes during stand-by for stop or anti-freezing function, or independent operation of the pump.	
⑥	**[ALARM] lamp**	Flashes with buzzer when alarm occurs.	
⑦	**[ ] lamp**	Lights up when the surface of the fluid level indicator falls below the L level.	
⑧	**[ ] lamp**	Equipped with a timer for start and stop. Lights up when this function is operated.	
⑨	**[ ] lamp**	Equipped with a power failure auto-restart function, which restarts the product automatically after stopped due to a power failure. Lights up when this function is operated.	
⑩	**[RUN/STOP] key**	Makes the product start or stop.	
⑪	**[MENU] key**	Shifts the main menu (display screen of circulating fluid discharge temperature and pressure) and other menus (for monitoring and entry of set values).	
⑫	**[SEL] key**	Changes the item in menu and enters the set value.	
⑬	**[▼] key**	Decreases the set value.	
⑭	**[▲] key**	Increases the set value.	
⑮	**[PUMP] key**	Press the [MENU] and [RUN/STOP] keys simultaneously. The pump starts running independently to make the product ready for start-up (release the air).	
⑯	**[RESET] key**	Press the [▼] and [▲] keys simultaneously. The alarm buzzer is stopped and the [ALARM] lamp is reset.	

List of Function

No.	Function	Outline
1	**Main display**	Displays the current and set temperature of the circulating fluid, discharge pressure of the circulating fluid. Changes the circulating fluid set temperature.
2	**Alarm display menu**	Indicates alarm number when an alarm occurs.
3	**Inspection monitor menu**	Product temperature, pressure and accumulated operating time can be checked as daily inspection. Use these for daily inspection.
4	**Key-lock**	Keys can be locked so that set values cannot be changed by operator error.
5	**Timer for operation start/stop**	Timer is used to set the operation start/stop.
6	**Signal for the completion of preparation**	A signal is output when the circulating fluid temperature reaches the set temperature, when using contact input/output and serial communication.
7	**Offset function**	Use this function when there is a temperature offset between the discharge temperature of the thermo-chiller and user's equipment.
8	**Reset after power failure**	Start operation automatically after the power supply is turned on.
9	**Key click sound setting**	Operation panel key sound can be set on/off.
10	**Changing temp. unit**	Temperature unit can be changed. Centigrade (°C) ⇔ Fahrenheit (°F)
11	**Changing pressure unit**	Pressure unit can be changed. MPa ⇔ PSI
12	**Data reset**	Functions can be reset to the default settings (settings when shipped from the factory).
13	**Accumulation time reset**	Reset function when the pump, the fan or the compressor is replaced. Reset the accumulated time here.
14	**Pump operation mode set**	The fluid supply mode of the pump can be changed Pressure control mode ⇔ Frequency set mode
15	**Anti-freezing function**	Circulating fluid is protected from freezing during winter or at night. Set beforehand if there is a risk of freezing.
16	**Warming-up function**	When circulating fluid temperature rising time at starting needs shortening during winter or at night, set beforehand.
17	**Anti-snow coverage function**	If there will be a possibility of the snow coverage due to the change of the installation environment (season, weather), set beforehand.
18	**Alarm buzzer sound setting**	Alarm sound can be set to on/off.
19	**Alarm customizing**	Operation during alarm condition and threshold values can be changed depending on the alarm type.
20	**Communication**	This function is used for contact input/output or serial communication.

Alarm

This unit has 42 types of alarms as standard, and displays each of them by its alarm code on the PV screen with the [ALARM] lamp ([LOW LEVEL] lamp) lit up on the operation display panel. The alarm can be read out through communication.

Code	Alarm message
AL01	Low level in tank
AL02	High circulating fluid discharge temp.
AL03	Circulating fluid discharge temp. rise
AL04	Circulating fluid discharge temp. drop
AL05	High circulating fluid return temp.
AL08	Circulating fluid discharge pressure rise
AL09	Circulating fluid discharge pressure drop
AL10	High compressor intake temp.
AL11	Low compressor intake temp.
AL12	Low super heat temp.
AL13	High compressor discharge pressure
AL15	Refrigeration circuit pressure (high pressure side) drop
AL16	Refrigeration circuit pressure (low pressure side) rise
AL17	Refrigeration circuit pressure (low pressure side) drop
AL18	Compressor running failure

Code	Alarm message
AL19	Communication error
AL20	Memory error
AL21	DC line fuse cut
AL22	Circulating fluid discharge temp. sensor failure
AL23	Circulating fluid return temp. sensor failure
AL24	Compressor intake temp. sensor failure
AL25	Circulating fluid discharge pressure sensor failure
AL26	Compressor discharge pressure sensor failure
AL27	Compressor intake pressure sensor failure
AL28	Pump maintenance
AL29	Fan maintenance*1
AL30	Compressor maintenance
AL31	Contact input 1 signal detection
AL32	Contact input 2 signal detection
AL37	Compressor discharge temp. sensor failure

Code	Alarm message
AL38	Compressor discharge temp. rise
AL39	Internal unit fan stoppage
AL40	Dustproof filter maintenance*1
AL41	Power stoppage
AL42	Compressor waiting
AL43	Fan breaker trip*1
AL44	Fan inverter error*1
AL45	Compressor breaker trip*2
AL46	Compressor inverter error
AL47	Pump breaker trip*2
AL48	Pump inverter error
AL49	Air exhaust fan stoppage*3

*1 Does not occur on the product of water-cooled refrigeration type.
*2 Does not occur on the product of power supply specification '-20'.
*3 Does not occur on the product of air-cooled refrigeration type.
* For details, read the Operation Manual.

For details, refer to the Operation Manual. Please download it via our website, https://www.smcworld.com

Communication Functions

Contact Input/Output

Item		Specifications
Connector type		M3 terminal block
Input signal	**Insulation method**	Photocoupler
	Rated input voltage	24 VDC
	Operating voltage range	21.6 to 26.4 VDC
	Rated input current	5 mA TYP
	Input impedance	4.7 kΩ
Contact output signal	**Rated load voltage**	48 VAC or less/30 VDC or less
	Maximum load current	500 mA AC/DC (Resistance load)
	Minimum load current	5 VDC 10 mA
Output voltage		24 VDC ±10% 500 mA MAX (No inductive load)
Circuit diagram		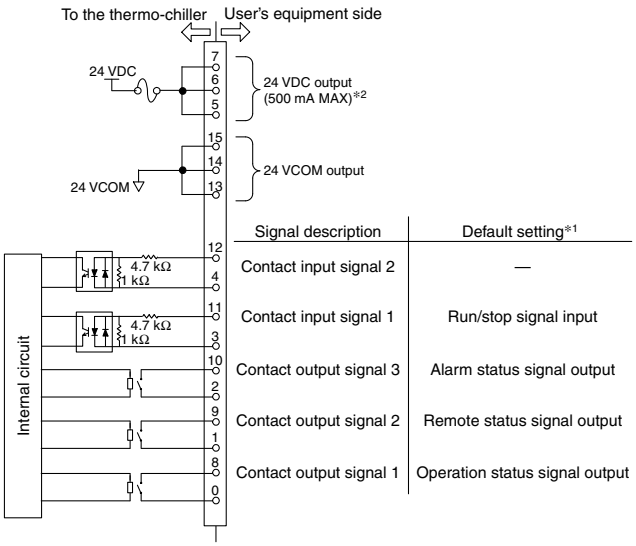

*1 The pin numbers and output signals can be set by user. For details, refer to the Operation Manual for communication.
*2 When using with optional accessories, depending on the accessory, the allowable current of 24 VDC devices will be reduced. Refer to the operation manual of the optional accessories for details.

Serial Communication

The serial communication (RS-485/RS-232C) enables the following items to be written and read out.
For details, refer to the Operation Manual for communication.

Writing

Run/Stop
Circulating fluid temperature setting (SV)

Readout

Circulating fluid present temperature
Circulating fluid discharge pressure
Electric conductivity*1
Status information
Alarm occurrence information

*1 When the optional accessory, "electric conductivity control set" is used.

Item	Specifications	
Connector type	D-sub 9-pin, Female connector (Mounting screw: M2.6 x 0.45)	
Protocol	Modicon Modbus compliant/Simple communication protocol	
Standards	EIA standard RS-485	EIA standard RS-232C
Circuit diagram	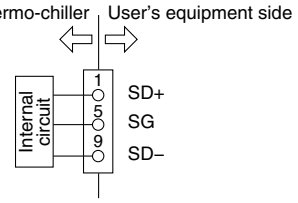	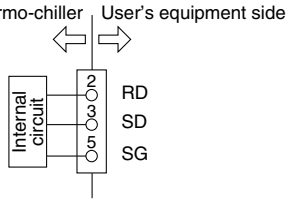

* The terminal resistance of RS-485 (120 Ω) can be switched by the operation display panel. For details, refer to the Operation Manual for communication. Do not connect other than in the way shown above, as it can result in failure.

Please download the Operation Manual via our website, https://www.smcworld.com

HRSH Series
Options

∗ **Options have to be selected when ordering the thermo-chiller. It is not possible to add them after purchasing the unit.**

A Option symbol

With Caster Adjuster-foot

HRSH□−□□−□−A

With caster adjuster-foot

Unfixed casters and adjuster feet stops are mounted.

Applicable model	Dimension [mm]			Additional weight∗1 [kg]
	A	B	C	
HRSH250/300-A□-□□-A	916	536	1838	Approx. 24
HRSH100/150/200-A□-□□-A	830	401	1538	Approx. 18
HRSH100/150/200/250-W□-□□-A	570		1353	

∗1 Refers to the amount of increase from the standard weight

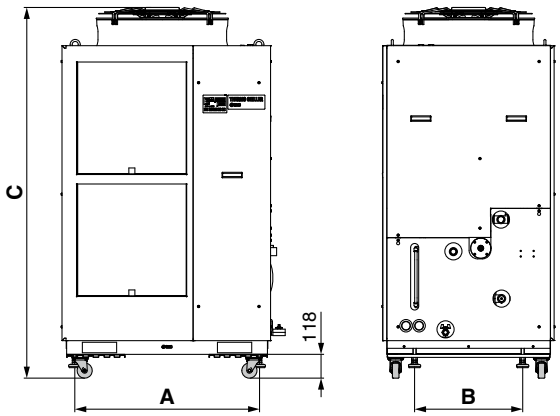

B Option symbol

With Earth Leakage Breaker

HRSH□−□□−20−B

With earth leakage breaker

A leakage breaker is built in to automatically stop the supply power when it has short-circuit, over current or electrical leakage. (It is not necessary to select this option since an earth leakage breaker is installed for the models with power supply specification '-40' as standard equipment.)

Applicable model	Rated current [A]	Sensitivity of leak current [mA]	Short circuit display method
HRSH100-□□-20-B	30	30	Mechanical button
HRSH150-□□-20-B			
HRSH200-□□-20-B	40		
HRSH250-□□-20-B	50		
HRSH300-□□-20-B			

∗ **400 V type is equipped as standard.**

(Refer to the specifications on pages 321, 322 and the dimensions on pages 325, 326 for details.)

∗ **Cannot be selected together with option B1.**

∗ **Cannot be selected together with option S.**

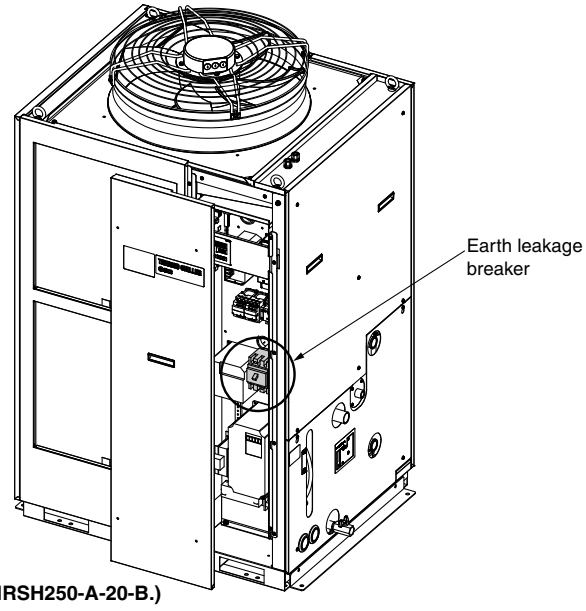

(The figure shows the HRSH250-A-20-B.)

B1 Option symbol

With Earth Leakage Breaker with Handle

HRSH□-□□-20-B1

With earth leakage breaker with handle

A breaker operation handle that can be operated without removing the front panel for the electrical unit is mounted. Breaker capacity, sensitivity of leak current, and operating characteristics of the breaker are the same as option B. (It is not necessary to select this option since an earth leakage breaker with a handle is installed for the models with power supply specification '-40' as standard equipment.)

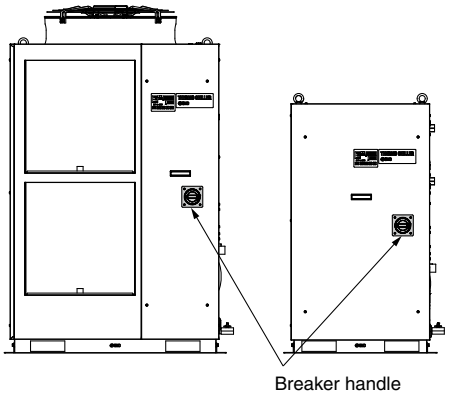

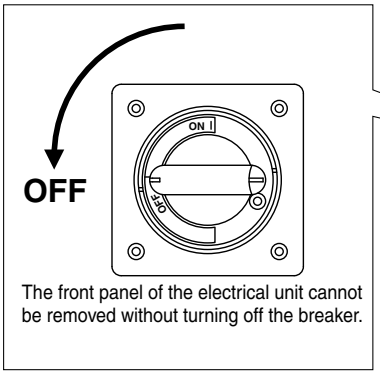

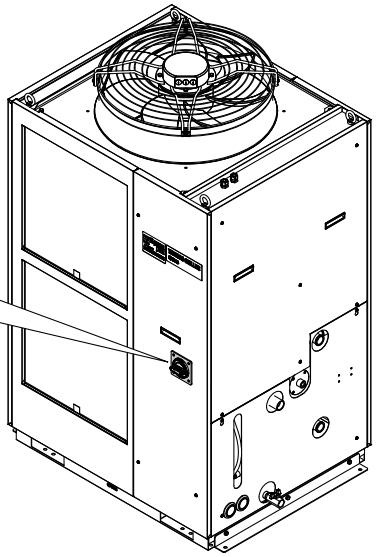

* 400 V type is equipped as standard.
* Cannot be selected together with option B.
* Cannot be selected together with option S.

K Option symbol

With Fluid Fill Port

HRSH□-□□-□-K

With fluid fill port

When the automatic fluid fill in port is not used, water can be supplied manually without removing the panel.

Applicable model	Dimension [mm]	
	A	B
HRSH100-□□-□-K HRSH150-□□-□-K HRSH200-□□-□-K HRSH250-W□-□-K	271	609
HRSH250-A□-□-K HRSH300-A□-□-K	372	708

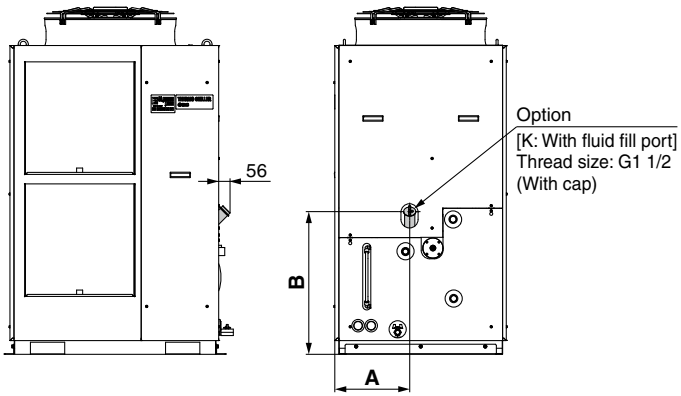

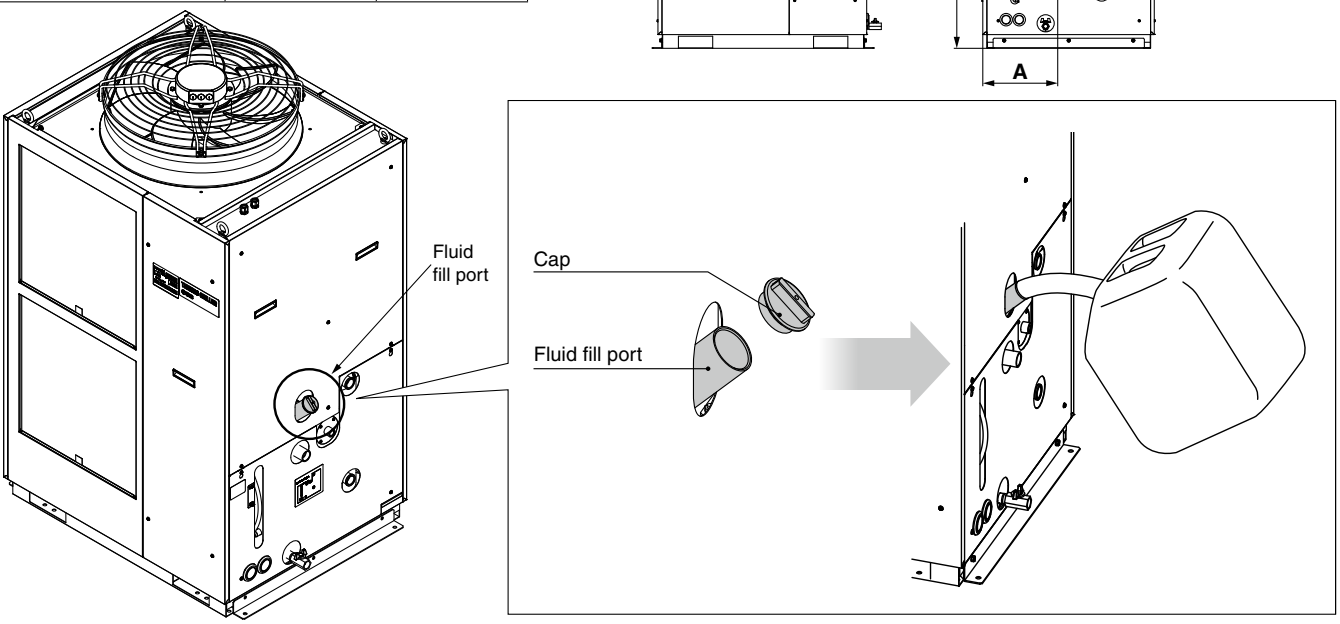

(The figure shows the HRSH250-A-20-K.)

M Option symbol

Applicable to DI Water Piping

HRSH□-□□-□-M

Applicable to DI water piping

Contact material of the circulating fluid circuit is made from non-copper materials.

Applicable model	**HRSH□-□□-□-M**
Contact material for circulating fluid	Stainless steel (including heat exchanger brazing), PTFE, PU, FKM, EPDM, PVC, NBR, POM

∗ No change in external dimensions

S Option symbol

Compliant with CE/UKCA, UL Standards

HRSH□-□□-20-S

Compliant with CE/UKCA, UL Standards

Products compliant with CE/UKCA, UL Standards.
The following standards are applicable.

Applicable standard	
CE/UKCA marking	Refer to the "Declaration of Conformity" on the SMC website.
UL standard	E112803 (UL61010-1)

When selecting this option,
- An earth leakage breaker with a breaker handle is equipped. (The breaker are the same as those for option B1.)
- A caution label is added.
- The CE/UKCA, UL certification mark is added to the model number label.

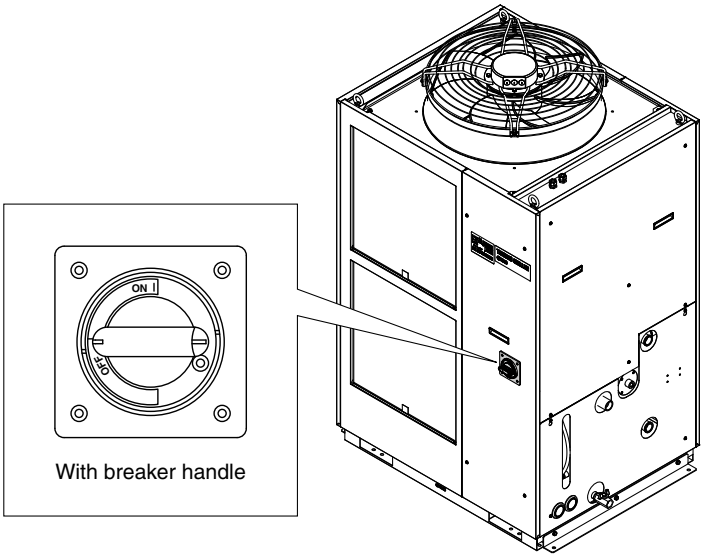

With breaker handle

∗ Cannot be selected for 400 V type.

∗ Cannot be selected together with option B.

∗ Cannot be selected together with option B1.

∗ For the operation in accordance with the UL Standard, the product should be used in an environment at a pollution degree of 2 or less. Prepare a power supply of overvoltage category Ⅱ or less.

T Option symbol

High-Pressure Pump Mounted

HRSH□-W□-□-T

High-pressure pump mounted

Possible to choose a high-pressure pump in accordance with user's piping resistance.

∗ Cannot be selected for air-cooled type

Model				HRSH100-W□-20-T	HRSH150-W□-20-T	HRSH200-W□-20-T	HRSH250-W□-20-T
Circulating fluid system	Pump capacity	Rated flow (Outlet)∗1, 2	L/min	125 (0.50 MPa)			
		Max. flow rate	L/min	180			
		Max. pump head	m	80			
	Settable pressure range		MPa	0.1 to 0.8			
	Min. operating flow rate		L/min	40			
	Tank capacity		L	42			
Electrical system	Applicable earth leakage breaker	Rated current	A	40			50
		Sensitivity of leak current	mA	30			
	Rated operating current		A	26		30	34
	Rated power consumption		kW (kVA)	6.6 (9.0)		8.2 (10.4)	8.9 (11.8)
Weight (dry state)			kg	Approx. 202			

∗1 The capacity at the thermo-chiller outlet when the circulating fluid temperature is 20°C
∗2 The required min. flow rate for maintaining the cooling capacity or temperature stability

Model				HRSH100-W□-40-T	HRSH150-W□-40-T	HRSH200-W□-40-T	HRSH250-W□-40-T
Circulating fluid system	Pump capacity	Rated flow (Outlet)∗1, 2	L/min	125 (0.50 MPa)			
		Max. flow rate	L/min	180			
		Max. pump head	m	80			
	Settable pressure range		MPa	0.1 to 0.8			
	Min. operating flow rate		L/min	40			
	Tank capacity		L	42			
Electrical system	Applicable earth leakage breaker	Rated current	A	30			
		Sensitivity of leak current	mA	30			
	Rated operating current		A	11.8	13.2	15.2	19.2
	Rated power consumption		kW (kVA)	6.5 (8.2)	7.5 (9.1)	9.0 (10.5)	11.9 (13.3)
Weight (dry state)			kg	Approx. 202			

∗1 The capacity at the thermo-chiller outlet when the circulating fluid temperature is 20°C
∗2 The required min. flow rate for maintaining the cooling capacity or temperature stability

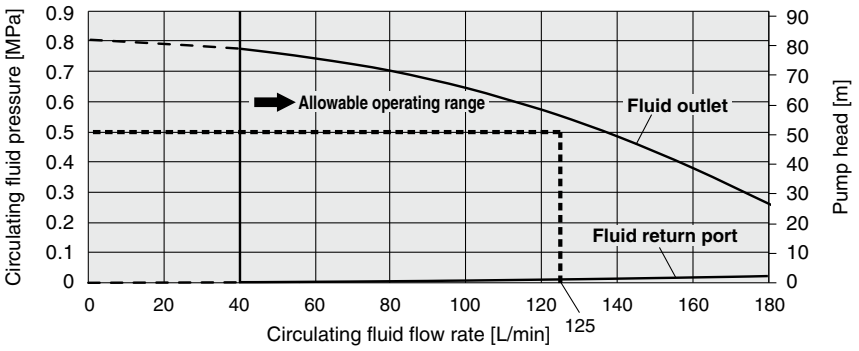

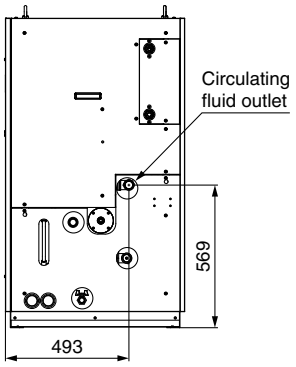

W Option symbol

SI Unit Only

HRSH□-□□-20-W

SI unit only

The circulating fluid temperature and pressure are displayed in SI units [MPa/°C] only.
If this option is not selected, a product with a unit selection function will be provided by default.
∗ No change in external dimensions

Optional Accessories

① Piping Conversion Fitting

This is a fitting to change the port from Rc to G or NPT.
· Circulating fluid outlet, Circulating fluid return port, Overflow port Rc1 → NPT1 or G1
· Drain port Rc3/4 → NPT3/4 or G3/4
· Automatic fluid fill port Rc1/2 → NPT1/2 or G1/2
· Facility water inlet, Facility water outlet Rc1 → NPT1 or G1 (for HRS-EP015 or HRS-EP016)
(It is not necessary to purchase this when pipe thread type F or N is selected in "How to Order" since it is included in the product.)

Part no.	Contents	Applicable model
HRS-EP013	NPT thread conversion fitting set	**HRSH□-A-□**
HRS-EP014	G thread conversion fitting set	
HRS-EP015	NPT thread conversion fitting set	**HRSH□-W-□**
HRS-EP016	G thread conversion fitting set	

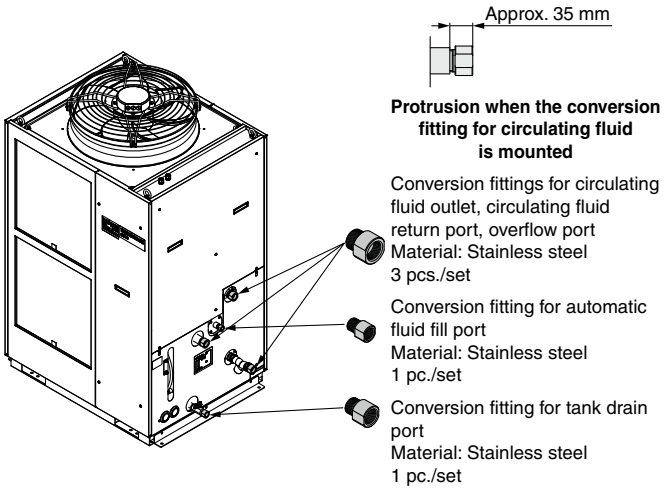

HRS-EP013, HRS-EP014

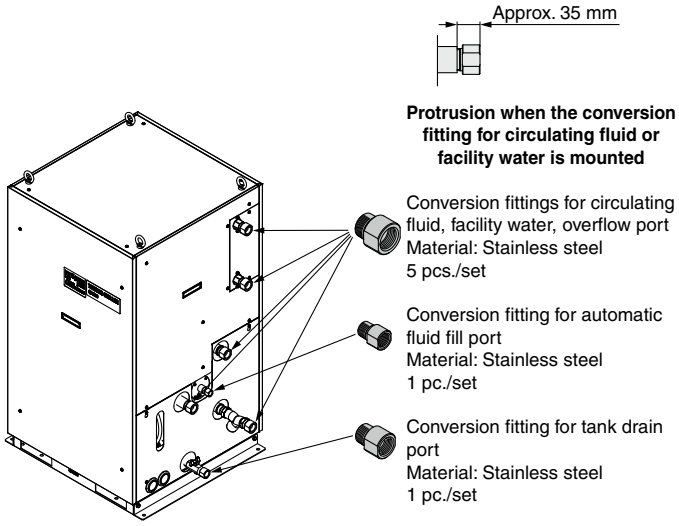

HRS-EP015, HRS-EP016

② Caster Adjuster-foot Kit

This is a set of unfixed casters and adjuster feet stop.
When installed by user, it is necessary to lift the thermo-chiller by a forklift or sling work.
Carefully read the procedure manual included with this kit before performing the installation.

Part no.	Applicable model	Dimension [mm]		Weight [kg]
		A	**B**	
HRS-KS001	**HRSH250-A□-□** **HRSH300-A□-□**	916	536	Approx. 24
HRS-KS002	**HRSH100-A□-□** **HRSH150-A□-□** **HRSH200-A□-□**	830	401	Approx. 18
	HRSH100-W□-□ **HRSH150-W□-□** **HRSH200-W□-□** **HRSH250-W□-□**	570		

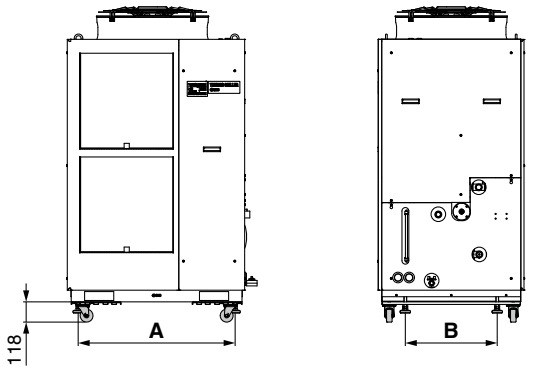

Fig. 1 Mounting view

Parts List

Description
Procedure manual
Caster adjuster-foot bracket (2 pcs.)
Fixing bolt (M8) (8 pcs.)

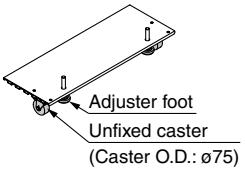

Fig. 2 Caster adjuster-foot bracket (2 pcs.)

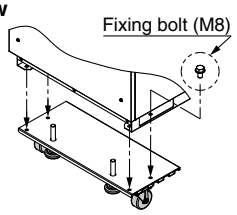

Fig. 3 Fixing bolt (8 pcs.)

③ Electric Conductivity Control Set

The set indicates and controls the electric conductivity of the circulating fluid. Refer to the Operation Manual for details.

Part no.	Applicable model
HRS-DI006	HRSH100-□□-□ HRSH150-□□-□ HRSH200-□□-□ HRSH250-□□-□ HRSH300-□□-□

Measurement range of electric conductivity	2.0 to 48.0 μS/cm
Set range of electric conductivity target	5.0 to 45.0 μS/cm
Set range of electric conductivity hysteresis	2.0 to 10.0 μS/cm
Operating temperature range (Circulating fluid temperature)	5 to 60°C
Power consumption	400 mA or less
Installation environment	Indoor

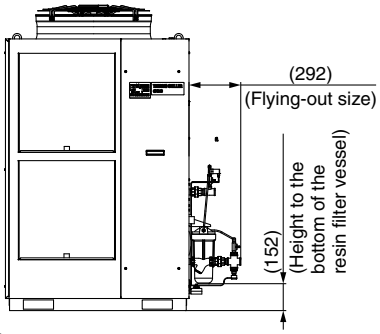

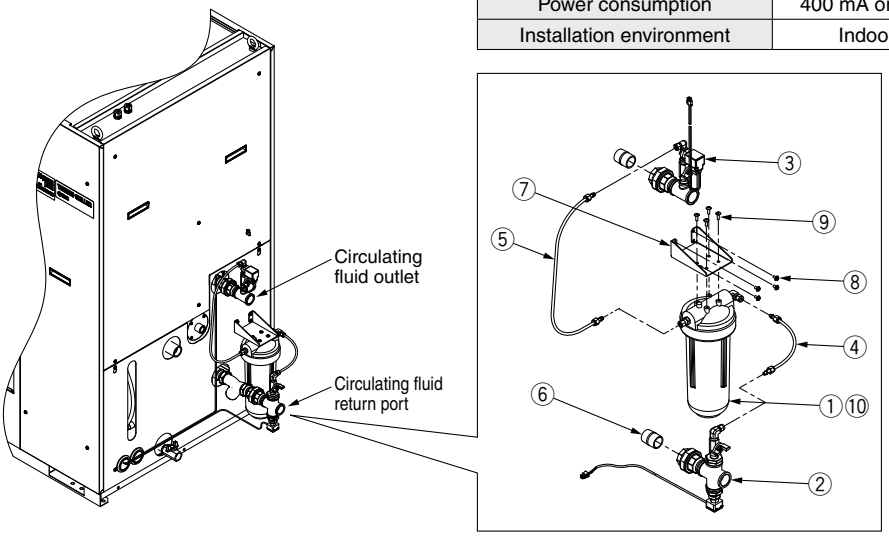

Parts List

No.	Description	Fluid contact material	Qty.
①	DI filter vessel	PC, PP	1
②	DI sensor assembly	Stainless steel, PPS	1
③	DI control piping assembly	Stainless steel, EPDM	1
④	DI filter outlet tube	PFA, POM	1
⑤	DI filter inlet tube	PFA, POM	1
⑥	Nipple (Size: 1 inch)	Stainless steel	2
⑦	Mounting bracket	—	1
⑧	Mounting screw (M5 screw)	—	4
⑨	Tapping screw (M5 screw)	—	4
⑩	DI filter cartridge (Part no.: HRS-DF001)*1	PP, PE	1

*1 The product should be replaced when it can no longer preserve the electrical conductivity set value.

④ Bypass Piping Set

When the circulating fluid goes below the minimum operating flow rate (as shown below), cooling capacity will be reduced and the temperature stability will be badly affected. Use the bypass piping set to ensure a circulating fluid flow rate of the minimum operating flow rate or more.

Bypass Piping Set

Part no.	Applicable model	Minimum operating flow rate [L/min]
HRS-BP005	HRSH100-□□-□	20
	HRSH150-□□-□ HRSH200-□□-□ HRSH250-W□-□	25
	HRSH250-A□-□ HRSH300-A□-□	40

Bypass Piping Set (Stainless Steel)

Part no.	Applicable model	Minimum operating flow rate [L/min]
HRS-BP011	HRSH100-□□-□	20
	HRSH150-□□-□ HRSH200-□□-□ HRSH250-W□-□	25
	HRSH250-A□-□ HRSH300-A□-□	40

* When selecting option "M," the HRS-BP011 is recommended.

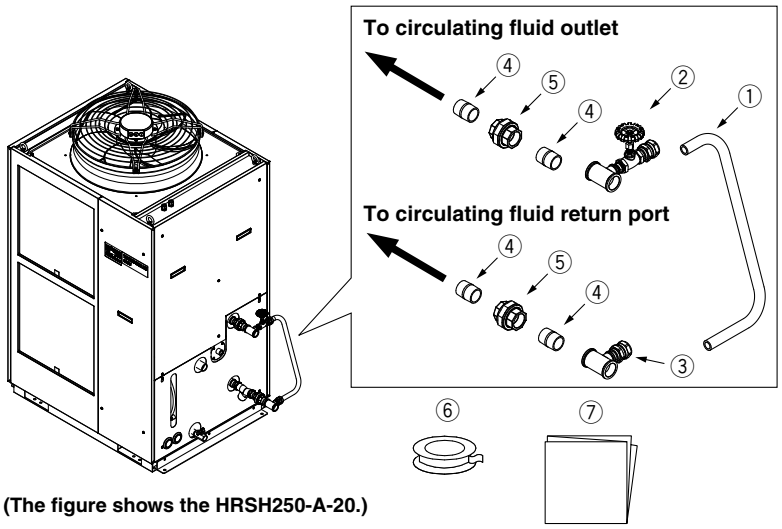

(The figure shows the HRSH250-A-20.)

Parts List

No.	Description	Fluid contact material		Qty.
		HRS-BP005	HRS-BP011	
①	Hose (I.D.: 15 mm)	PVC	PVC	1 (Approx. 700 mm)
②	Outlet piping assembly (With globe valve)	Stainless steel, Brass, Bronze	Stainless steel	1
③	Return piping assembly	Stainless steel, Brass	Stainless steel	1
④	Nipple (Size: 1 inch)	Stainless steel	Stainless steel	4
⑤	Union (Size: 1 inch)	Stainless steel	Stainless steel	2
⑥	Sealant tape	PTFE	PTFE	1
⑦	Operation Manual	—	—	1

⑤ Snow Protection Hood

Stainless steel snow protection hood for air-cooled chiller.
According to the mounting direction of the snow protection hood, the ventilation from the fan can be selected from four directions, front, rear, left and right.

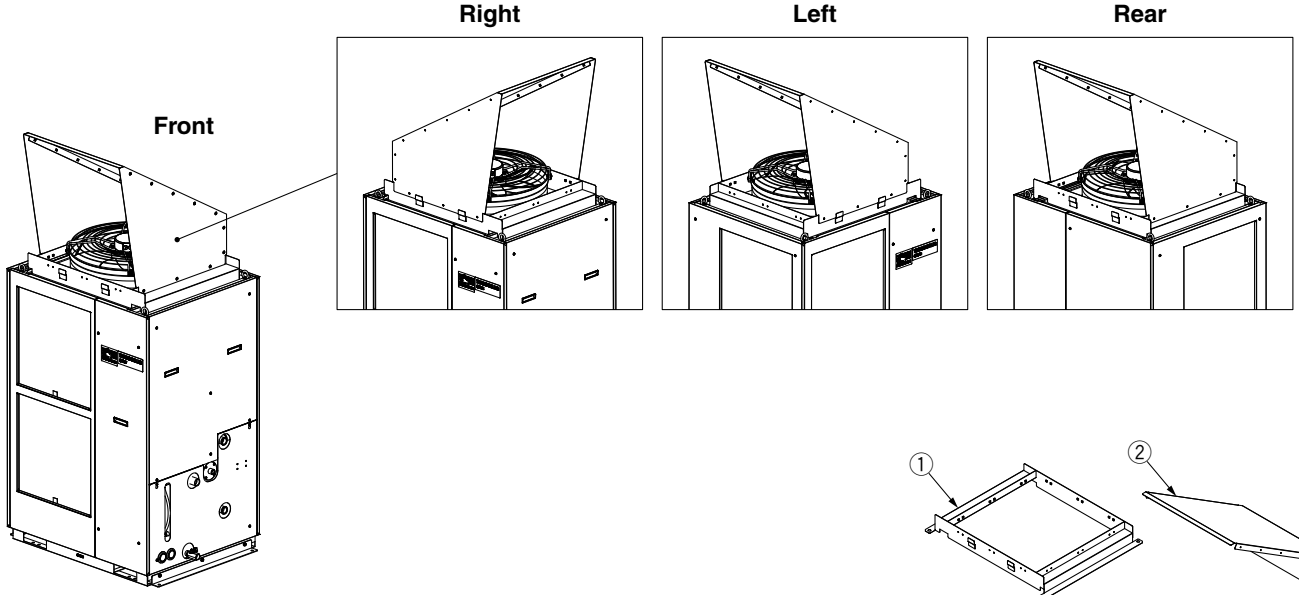

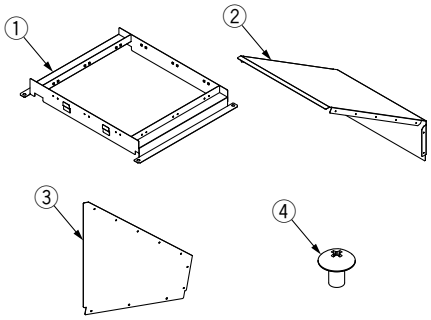

Part no.	Applicable model	Weight [kg]
HRS-BK003	**HRSH250-A□-□** **HRSH300-A□-□**	22
HRS-BK004	**HRSH100-A□-□** **HRSH150-A□-□** **HRSH200-A□-□**	18

Parts List

No.	Description	Qty.
①	Snow protection hood base	1
②	Snow protection hood A	1
③	Snow protection hood B	2
④	Assembly/Mounting screw	20

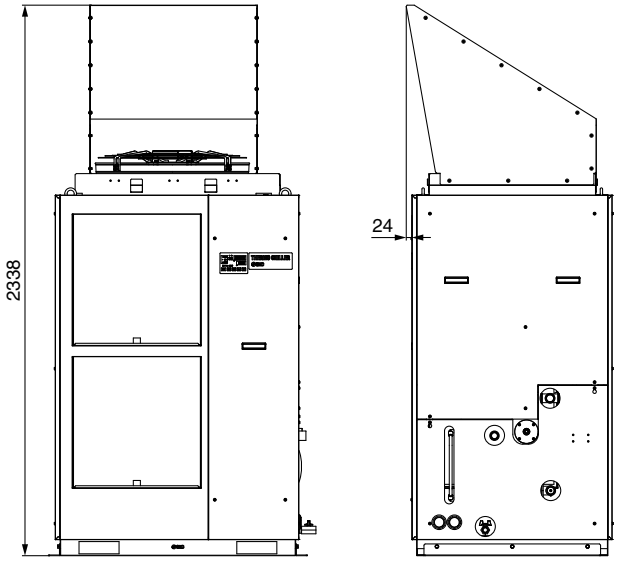

Mounting condition for HRS-BK003

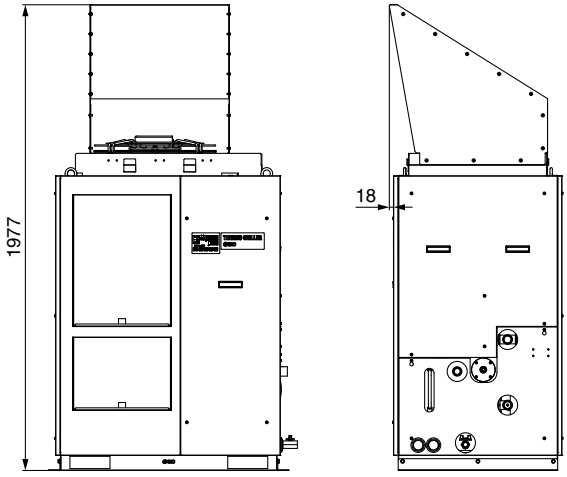

Mounting condition for HRS-BK004

∗ This hood does not completely prevent snow from entering the inside of the chiller.

⑥ Particle Filter Set

Removes foreign matter in the circulating fluid. This set cannot be directly connected to the thermo-chiller. Install it in the user's piping system. Refer to the Operation Manual for details.

Particle Filter Set

HRS−PF005−H

Accessory

Symbol	Accessory
Nil	None
H	With handle

Fluid	Tap water
Max. operating pressure	0.65 MPa
Operating temperature range	5 to 35°C
Nominal filtration accuracy	5 μm
Installation environment	Indoors

Parts List

No.	Description	Material	Qty.	Note
①	Body	PC, PP	1	—
②	Element*1	PP	1	—
③	Extension piece	Stainless steel	2	Conversion from NPT to Rc
④	Handle	—	1	When -H is selected
⑤	Sealant tape	PTFE	1	—

*1 The product should be replaced when the pressure drop reaches 0.1 MPa.

Replacement Element

HRS−PF006

The product should be replaced when the pressure drop reaches 0.1 MPa.

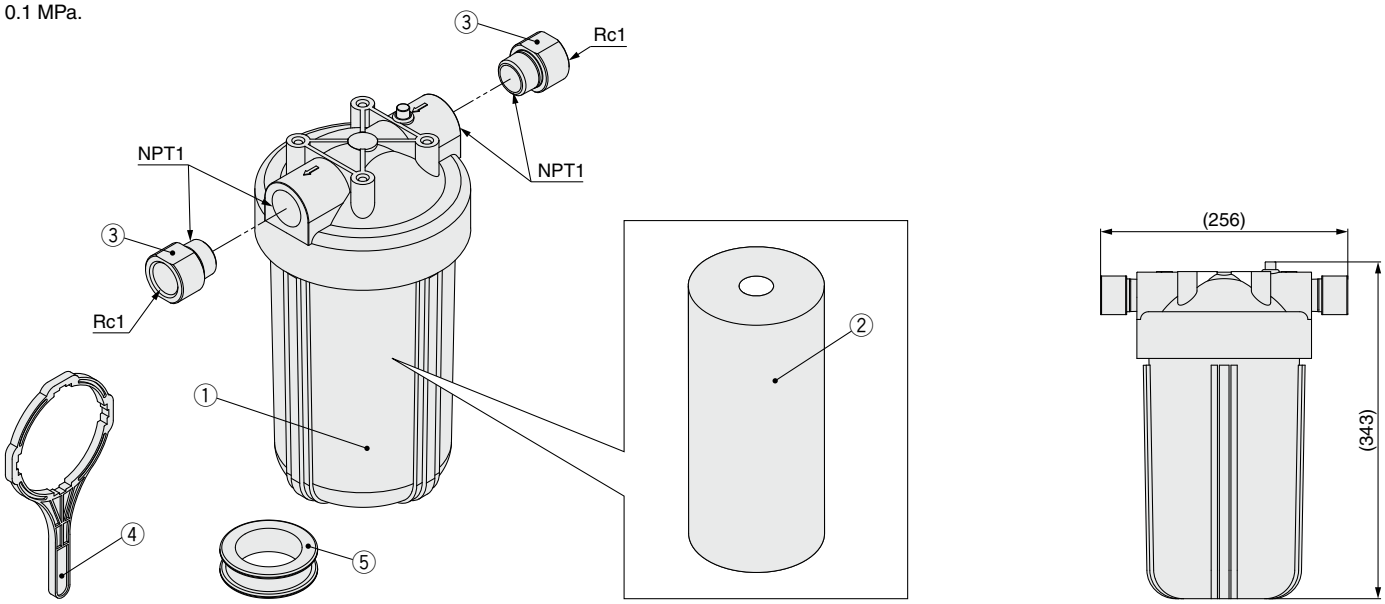

⑦ Wired Remote Controller

When the wired remote controller is connected to the thermo-chiller, the operation start/stop setting or the set temperature can be changed from a place apart from the thermo-chiller. For details, refer to the Operation Manual.

Wired Remote Controller

HRS−CV004− 1

Accessories

Symbol	Accessories
Nil	None
1	With cable (Approx. 20 m)
2	With cable (Approx. 50 m)
3	With cable (Approx. 100 m)

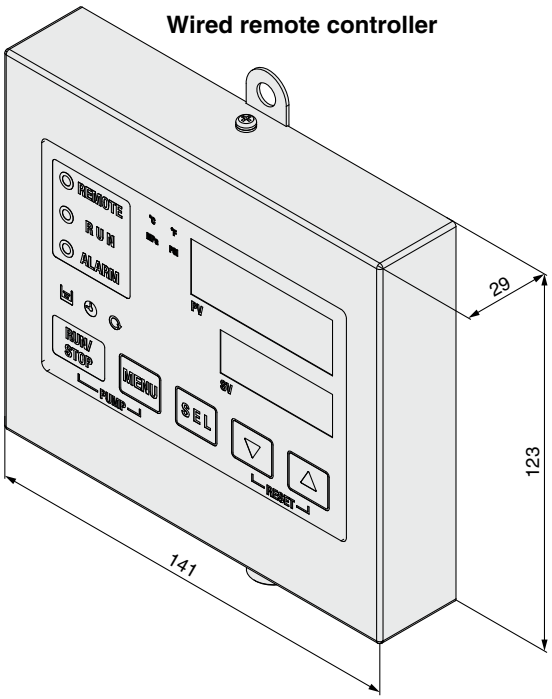

Displayed items

Circulating fluid discharge temperature
Circulating fluid discharge set temperature
Circulating fluid discharge pressure
Circulating fluid electric conductivity*1
Circulating fluid flow rate
Alarm code*2

*1 Only when the electric conductivity control set is used.
*2 Only when an alarm occurs. The alarm cannot be reset with the remote controller. Be sure to reset the alarm with the thermo-chiller main unit.

Operable items

Operation start/stop
Circulating fluid temperature setting
Alarm sound stop
Key-lock
Key operation sound ON/OFF
Digital display brightness adjustment
Alarm sound ON/OFF

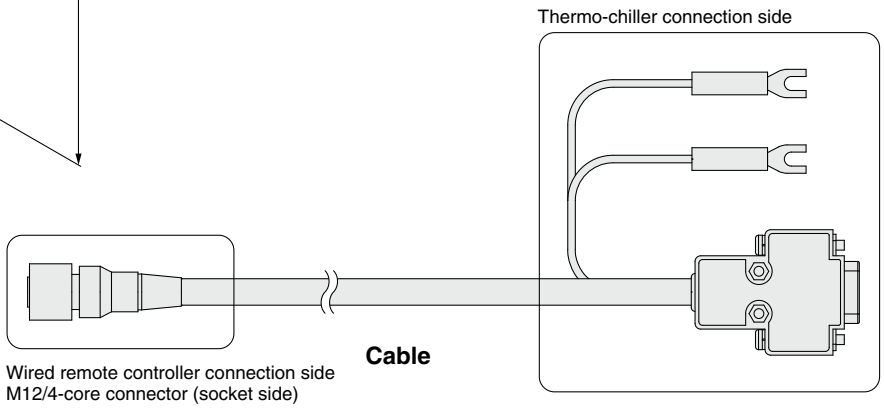

* To use the wired remote controller, the thermo-chiller main unit setting is needed.
* Use the wired remote controller indoors.
* Pass the cable through the duct, etc. so that it is not exposed to rain water or direct sunlight.

HRSH Series
Cooling Capacity Calculation

Required Cooling Capacity Calculation

Example 1: When the heat generation amount in the user's equipment is known.

The heat generation amount can be determined based on the power consumption or output of the heat generating area — i.e. the area requiring cooling — within the user's equipment.∗1

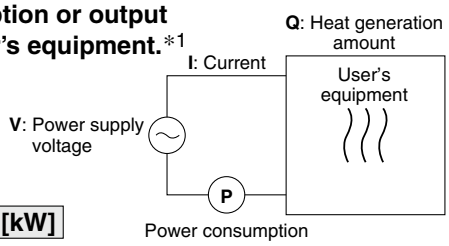

① **Derive the heat generation amount from the power consumption.**

Power consumption **P**: 20 [kW]

Q = P = 20 [kW]

Cooling capacity = Considering a safety factor of 20%, **20 [kW] x 1.2 = 24 [kW]**

② **Derive the heat generation amount from the power supply output.**

Power supply output **VI**: 20 [kVA]

Q = P = V x I x Power factor

In this example, using a power factor of 0.85:

= 20 [kVA] x 0.85 = 17 [kW]

Cooling capacity = Considering a safety factor of 20%,

17 [kW] x 1.2 = 20.4 [kW]

③ **Derive the heat generation amount from the output.**

Output (shaft power, etc.) **W**: 13 [kW]

$$Q = P = \frac{W}{\text{Efficiency}}$$

In this example, using an efficiency of 0.7:

$$= \frac{13}{0.7} = 18.6\ [\text{kW}]$$

Cooling capacity = Considering a safety factor of 20%,

18.6 [kW] x 1.2 = 22.3 [kW]

∗1 The examples above calculate the heat generation amount based on the power consumption.
The actual heat generation amount may differ due to the structure of the user's equipment.
Be sure to check it carefully.

Example 2: When the heat generation amount in the user's equipment is not known.

Obtain the temperature difference between inlet and outlet by circulating the circulating fluid inside the user's equipment.

Heat generation amount by user's equipment **Q**	: Unknown [W] ([J/s])
Circulating fluid	: Tap water∗1
Circulating fluid mass flow rate **qm**	: (= ρ x **qv** ÷ 60) [kg/s]
Circulating fluid density ρ	: 1 [kg/L]
Circulating fluid (volume) flow rate **qv**	: 70 [L/min]
Circulating fluid specific heat **C**	: 4.186 x 10^3 [J/(kg·K)]
Circulating fluid outlet temperature T_1	: 293 [K] (20 [°C])
Circulating fluid return temperature T_2	: 297 [K] (24 [°C])
Circulating fluid temperature difference ΔT	: 4 [K] (= $T_2 - T_1$)
Conversion factor: minutes to seconds (SI units)	: 60 [s/min]

∗1 Refer to page 340 for the typical physical property value of tap water or other circulating fluids.

$$Q = qm \times C \times (T_2 - T_1)$$

$$= \frac{\rho \times qv \times C \times \Delta T}{60} = \frac{1 \times 70 \times 4.186 \times 10^3 \times 4.0}{60}$$

$$= 19535\ [\text{J/s}] \approx 19535\ [\text{W}] = 19.5\ [\text{kW}]$$

Cooling capacity = Considering a safety factor of 20%,

19.5 [kW] x 1.2 = 23.4 [kW]

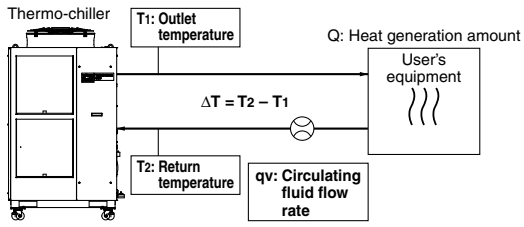

HRSH250-A

Example of conventional units (Reference)

Heat generation amount by user's equipment **Q**	: Unknown [cal/h] → [W]
Circulating fluid	: Tap water∗1
Circulating fluid weight flow rate **qm**	: (= ρ x **qv** x 60) [kgf/h]
Circulating fluid weight volume ratio γ	: 1 [kgf/L]
Circulating fluid (volume) flow rate **qv**	: 70 [L/min]
Circulating fluid specific heat **C**	: 1.0 x 10^3 [cal/(kgf·°C)]
Circulating fluid outlet temperature T_1	: 20 [°C]
Circulating fluid return temperature T_2	: 24 [°C]
Circulating fluid temperature difference ΔT	: 4 [°C] (= $T_2 - T_1$)
Conversion factor: hours to minutes	: 60 [min/h]
Conversion factor: kcal/h to kW	: 860 [(cal/h)/W]

$$Q = \frac{qm \times C \times (T_2 - T_1)}{860}$$

$$= \frac{\gamma \times qv \times 60 \times C \times \Delta T}{860}$$

$$= \frac{1 \times 70 \times 60 \times 1.0 \times 10^3 \times 4.0}{860}$$

$$= \frac{16800000\ [\text{cal/h}]}{860}$$

$$\approx 19534\ [\text{W}] = 19.5\ [\text{kW}]$$

Cooling capacity = Considering a safety factor of 20%,

19.5 [kW] x 1.2 = 23.4 [kW]

Required Cooling Capacity Calculation

Example 3: When there is no heat generation, and when cooling the object below a certain temperature and period of time.

Heat quantity by cooled substance (per unit time) **Q**	: Unknown [W] ([J/s])
Cooled substance	: Water
Cooled substance mass **m**	: (= ρ x **V**) [kg]
Cooled substance density ρ	: 1 [kg/L]
Cooled substance total volume **V**	: 300 [L]
Cooled substance specific heat **C**	: 4.186 x 10^3 [J/(kg·K)]
Cooled substance temperature when cooling begins T_0	: 305 [K] (32 [°C])
Cooled substance temperature after t hour T_t	: 293 [K] (20 [°C])
Cooling temperature difference ΔT	: 12 [K] (= $T_0 - T_t$)
Cooling time Δt	: 900 [s] (= 15 [min])

∗ Refer to the following for the typical physical property values by circulating fluid.

$$Q = \frac{m \times C \times (T_0 - T_t)}{\Delta t} = \frac{\rho \times V \times C \times \Delta T}{\Delta t}$$

$$= \frac{1 \times 300 \times 4.186 \times 10^3 \times 12}{900} = 16744\ [J/s] \approx 16.7\ [kW]$$

Cooling capacity = Considering a safety factor of 20%,

16.7 [kW] x 1.2 = 20 [kW]

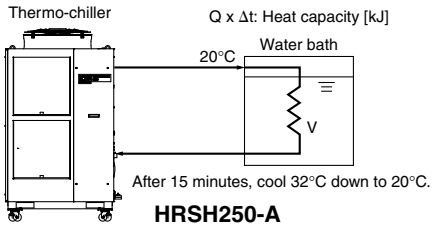

Example of conventional units (Reference)

Heat quantity by cooled substance (per unit time) **Q**	: Unknown [cal/h] → [W]
Cooled substance	: Water
Cooled substance weight **m**	: (= ρ x **V**) [kgf]
Cooled substance weight volume ratio γ	: 1 [kgf/L]
Cooled substance total volume **V**	: 300 [L]
Cooled substance specific heat **C**	: 1.0 x 10^3 [cal/(kgf·°C)]
Cooled substance temperature when cooling begins T_0	: 32 [°C]
Cooled substance temperature after t hour T_t	: 20 [°C]
Cooling temperature difference ΔT	: 12 [°C] (= $T_0 - T_t$)
Cooling time Δt	: 15 [min]
Conversion factor: hours to minutes	: 60 [min/h]
Conversion factor: kcal/h to kW	: 860 [(cal/h)/W]

$$Q = \frac{m \times C \times (T_0 - T_t)}{\Delta t \times 860} = \frac{\gamma \times V \times 60 \times C \times \Delta T}{\Delta t \times 860}$$

$$= \frac{1 \times 300 \times 60 \times 1.0 \times 10^3 \times 12}{15 \times 860}$$

$$\approx 16744\ [W] = 16.7\ [kW]$$

Cooling capacity = Considering a safety factor of 20%,

16.7 [kW] x 1.2 = 20 [kW]

∗ This is the calculated value by changing the fluid temperature only.
Thus, it varies substantially depending on the water bath or piping shape.

Precautions on Cooling Capacity Calculation

1. Heating capacity

When the circulating fluid temperature is set above room temperature, it needs to be heated by the thermo-chiller. The heating capacity depends on the circulating fluid temperature. Consider the radiation rate and heat capacity of the user's equipment and check beforehand if the required heating capacity is provided.

2. Pump capacity

<Circulating fluid flow rate>

Circulating fluid flow rate varies depending on the circulating fluid discharge pressure. Consider the installation height difference between the thermo-chiller and the user's equipment, and the piping resistance such as circulating fluid pipings, or piping size, or piping curves in the machine. Check beforehand if the required flow is achieved, using the pump capacity curves.

<Circulating fluid discharge pressure>

Circulating fluid discharge pressure has the possibility to increase up to the maximum pressure in the pump capacity curves.
Check beforehand if the circulating fluid pipings or circulating fluid circuit of the user's equipment are fully durable against this pressure.

Circulating Fluid Typical Physical Property Values

1. This catalog uses the following values for density and specific heat in calculating the required cooling capacity.

Density ρ: 1 [kg/L] (or, using conventional units, weight volume ratio γ = 1 [kgf/L])
Specific heat **C**: 4.19 x 10^3 [J/(kg·K)] (or, using conventional units, 1 x 10^3 [cal/(kgf·°C)])

2. Values for density and specific heat change slightly according to temperature shown below. Use this as a reference.

Water

Physical property value / Temperature	Density ρ [kg/L]	Specific heat C [J/(kg·K)]	Conventional units	
			Weight volume ratio γ [kgf/L]	Specific heat C [cal/(kgf·°C)]
5°C	1.00	4.2 x 10^3	1.00	1 x 10^3
10°C	1.00	4.19 x 10^3	1.00	1 x 10^3
15°C	1.00	4.19 x 10^3	1.00	1 x 10^3
20°C	1.00	4.18 x 10^3	1.00	1 x 10^3
25°C	1.00	4.18 x 10^3	1.00	1 x 10^3
30°C	1.00	4.18 x 10^3	1.00	1 x 10^3
35°C	0.99	4.18 x 10^3	0.99	1 x 10^3
40°C	0.99	4.18 x 10^3	0.99	1 x 10^3

15% Ethylene Glycol Aqueous Solution

Physical property value / Temperature	Density ρ [kg/L]	Specific heat C [J/(kg·K)]	Conventional units	
			Weight volume ratio γ [kgf/L]	Specific heat C [cal/(kgf·°C)]
5°C	1.02	3.91 x 10^3	1.02	0.93 x 10^3
10°C	1.02	3.91 x 10^3	1.02	0.93 x 10^3
15°C	1.02	3.91 x 10^3	1.02	0.93 x 10^3
20°C	1.01	3.91 x 10^3	1.01	0.93 x 10^3
25°C	1.01	3.91 x 10^3	1.01	0.93 x 10^3
30°C	1.01	3.91 x 10^3	1.01	0.94 x 10^3
35°C	1.01	3.91 x 10^3	1.01	0.94 x 10^3
40°C	1.01	3.92 x 10^3	1.01	0.94 x 10^3

∗ Shown above are reference values.

HRSH Series
Specific Product Precautions 1

Be sure to read this before handling the products. For safety instructions and temperature control equipment precautions, refer to the "Handling Precautions for SMC Products" and the "Operation Manual" on the SMC website: https://www.smcworld.com

Design

⚠ Warning

1. This catalog shows the specifications of a single unit.

1) Check the specifications of the single unit (contents of this catalog) and thoroughly consider the adaptability between the user's system and this unit.
2) Although a protection circuit as a single unit is installed, prepare a drain pan, water leakage sensor, discharge air facility, and emergency stop equipment, depending on the user's operating conditions. Also, the user is requested to carry out a safety design for the whole system.

2. When attempting to cool areas that are open to the atmosphere (tanks, pipes), plan your piping system accordingly.

When cooling open-air external tanks, arrange the piping so that there are coil pipes for cooling inside the tanks and to carry back the entire flow volume of circulating fluid that is released.

3. Use non-corrosive material for circulating fluid and facility water contact parts.

Using corrosive materials such as aluminum or iron for fluid contact parts such as piping may cause clogging or leakage in the circulating fluid and facility water circuits. Provide protection against corrosion when you use the product.

4. The facility water outlet temperature (water-cooled type) may increase up to around 60°C.

When selecting the facility water pipings, consider the suitability for temperature.

Selection

⚠ Warning

Model selection

When selecting a thermo-chiller model, the amount of heat generation from the user's equipment must be known. Obtain this value, referring to "Cooling Capacity Calculation" on pages 339 and 340 before selecting a model.

Handling

⚠ Warning

Thoroughly read the operation manual.

Read the operation manual completely before operation, and keep the manual where it can be referred to as necessary.

Operating Environment/Storage Environment

⚠ Warning

1. Do not use in the following environment as it will lead to a breakdown.

1) In locations where water vapor, salt water, and oil may splash on the product.
2) In locations where there are dust and particles.
3) In locations where corrosive gases, organic solvents, chemical fluids, or flammable gases are present. (This product is not explosion proof.)

Operating Environment/Storage Environment

⚠ Warning

4) In locations where the ambient temperature exceeds the limits as mentioned below.
   During transportation/storage: –15°C to 50°C (But as long as water or circulating fluid are not left inside the pipings)
   During operation: Air cooling type: –20 to 45°C
   Water cooling type: 2 to 45°C
   ∗ When the ambient temperature or circulating fluid temperature is 10°C or below, use the circulating fluid specified in "Operation at low ambient temperature or low circulating fluid temperature".
5) In locations where condensation may occur.
6) In locations which receive direct sunlight or radiated heat.
7) In locations where there is a heat source nearby and the ventilation is poor.
8) In locations where temperature substantially changes.
9) In locations where strong magnetic noise occurs.
   (In locations where strong electric fields, strong magnetic fields and surge voltage occur.)
10) In locations where static electricity occurs, or conditions which make the product discharge static electricity.
11) In locations where high frequency occurs.
12) In locations where damage is likely to occur due to lightning.
13) In locations at an altitude of 3000 m or higher (Except during storage and transportation)
    ∗ For altitudes of 1000 m or higher
    Because of lower air density, the heat radiation efficiencies of the devices in the product will be lower in the location at an altitude of 1000 m or higher. Therefore, the maximum ambient temperature to use and the cooling capacity will lower according to the descriptions in the table below.
    Select the thermo-chiller considering the descriptions.
    ① Upper limit of ambient temperature: Use the product in ambient temperature of the described value or lower at each altitude.
    ② Cooling capacity coefficient: The product's cooling capacity will lower to one that multiplied by the described value at each altitude.

Altitude [m]	① Upper limit of ambient temperature [°C]	② Cooling capacity coefficient
Less than 1000 m	45	1.00
Less than 1500 m	42	0.85
Less than 2000 m	38	0.80
Less than 2500 m	35	0.75
Less than 3000 m	32	0.70

    If heat from the product cannot be sufficiently radiated due to a rise in the ambient temperature, a lack of ventilation, high elevation, etc., the refrigerant circuit pressure on the high pressure side will rise. As a result, the compressor will overload, affecting product performance and life, so be sure to check the value of the refrigerant circuit pressure on the high pressure side. Refer to the operation manual for details on how to check the value of the refrigerant circuit pressure on the high pressure side.
14) In locations where strong impacts or vibrations occur.
15) In locations where a massive force strong enough to deform the product is applied or a weight from a heavy object is applied.
16) In locations where there is not sufficient space for maintenance.
17) In locations where liquid that exceeds the conditions required for the degrees of protection IPX4 may splash on the product.
18) Insects or plants may enter the unit.

2. The product is not designed for clean room usage. It generates particles internally.

HRSH Series
Specific Product Precautions 2

Be sure to read this before handling the products. For safety instructions and temperature control equipment precautions, refer to the "Handling Precautions for SMC Products" and the "Operation Manual" on the SMC website: https://www.smcworld.com

Operating Environment/Storage Environment

3. The product is not dust-proof.

If used in an environment with dust, it may accumulate inside the product and cause not only a malfunction but also a fire hazard.

Operation at Low Ambient Temperature or Low Circulating Fluid Temperature

⚠ Caution

1. Circulating fluid

In order to avoid freezing of the circulating fluid, use aqueous solution of ethylene glycol.

Ambient temperature [°C]	Recommended circulating fluids
10 to 45	Tap water, ethylene glycol aqueous solution 15 (wt)%
–5 to 10	Ethylene glycol aqueous solution 15 (wt)%
–20 to –5	Ethylene glycol aqueous solution 40 (wt)%

Circulating fluid temperature[°C]	Recommended circulating fluids
10 to 35	Tap water, ethylene glycol aqueous solution 15 (wt)%
5 to 10	Ethylene glycol aqueous solution 15 (wt)%

∗ Concentration has to be 40 (wt)% or less. If the concentration is higher than 40 (wt)%, pump could be overloaded and Thermo-chiller makes alarm.

∗ When 40% ethylene glycol aqueous solution is used, cooling capacity decreases by 20%.

2. And following instructions must be executed. If following instructions are not executed, not only Thermo-chiller alarm will be generated, but also damage of the product can result.

- Power has to be supplied to the Thermo-chiller all the time.
- Turn on anti-freezing function (set parameter: SE.10) all the time.
- When the power supply to the Thermo-chiller is stopped for a long period of time, discharge all the circulating fluid in the Thermo-chiller and user's device and piping. When the Thermo-chiller is refilled with the circulating fluid, supply the fluid at normal temperature.

Operation at High Ambient Temperature

⚠ Caution

Check the value of the refrigerant circuit pressure on the high pressure side.

If heat from the product cannot be sufficiently radiated due to a rise in the ambient temperature, a lack of ventilation, high elevation, etc., the refrigerant circuit pressure on the high pressure side will rise. As a result, the compressor will overload, affecting product performance and life.

Refer to the operation manual for details on how to check the value of the refrigerant circuit pressure on the high pressure side.

Transportation/Carriage/Movement

⚠ Warning

1. This product will require an acceptance with the product not unloaded from the truck, and the user will need to unload the product by himself. Prepare a forklift.

The product will be delivered in the packaging shown below.

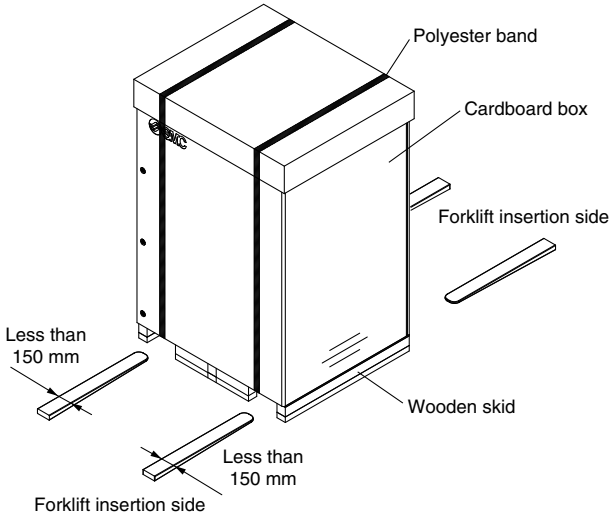

<When packaged>

Model	Weight [kg]	Dimensions [mm]
HRSH100-A□-□	221	Height 1585 x Width 1185 x Depth 955
HRSH150-A□-□ **HRSH200-A□-□**	256	
HRSH250-A□-□	330	Height 1895 x Width 1230 x Depth 1040
HRSH100-W□-□	185	Height 1485 x Width 925 x Depth 955
HRSH150-W□-□ **HRSH200-W□-□** **HRSH250-W□-□**	215	
HRSH100-A□-A	240	Height 1710 x Width 1185 x Depth 955
HRSH150-A□-A **HRSH200-A□-A**	275	
HRSH250-A□-A **HRSH300-A□-A**	355	Height 2020 x Width 1230 x Depth 1040
HRSH100-W□-A	204	Height 1610 x Width 925 x Depth 955
HRSH150-W□-A **HRSH200-W□-A** **HRSH250-W□-A**	234	

2. Transporting with forklift

1) A licensed driver should drive the forklift.
2) The proper place to insert the tines of the forklift differs depending on the model of cooler. Check the insert position, and be sure to drive the fork in far enough for it to come out the other side.
3) Be careful not to bump the fork to the cover panel or piping ports.

HRSH Series
Specific Product Precautions 3

Be sure to read this before handling the products. For safety instructions and temperature control equipment precautions, refer to the "Handling Precautions for SMC Products" and the "Operation Manual" on the SMC website: https://www.smcworld.com

Transportation/Carriage/Movement

⚠ Warning

3. Hanging transportation

1) Crane manipulation and slinging work should be done by an eligible person.
2) Do not grip the piping on the right side or the handles of the panel.
3) When hanging by the eye bolts, be sure to use a 4-point hanging method. For the hanging angle, use caution regarding the position of the center of gravity and hold it within 60°.

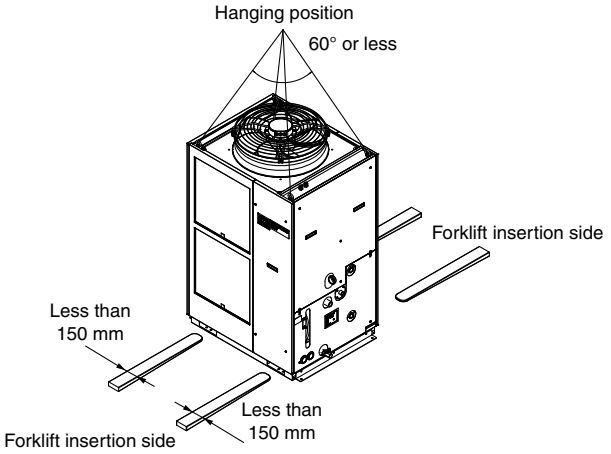

HRSH250-A-20

(When using option A/With caster adjuster-foot and optional accessories/Caster adjuster-foot kit HRS-KS001 or KS002)

4. Transporting with casters

1) This product is heavy and should be moved by at least two people.
2) Do not grip the piping port on the right side or the handles of the panel.
3) When transporting using a forklift, be sure not to let it hit the casters or adjusters, and drive the fork all the way through until it comes out the other side.
4) Do not get across steps with casters.

⚠ Caution

If this product is to be transported after delivery, please use the original packaging the product was delivered in. If other packaging is to be used, carefully package the product so as to prevent the product from incurring any damage during transport.

Mounting/Installation

⚠ Warning

Do not place heavy objects on top of this product, or step on it.

The external panel can be deformed and danger can result.

⚠ Caution

1. Install on a rigid floor which can withstand this product's weight.

2. Secure with bolts, anchor bolts, etc.

Mounting/Installation

⚠ Caution

3. Refer to the operation manual for this product, and secure an installation space that is necessary for the maintenance and ventilation.

<Air-cooled refrigeration>

1. The air-cooled type product exhausts heat using the fan that is mounted to the product. If the product is operated with insufficient ventilation, ambient temperature may exceed 45°C, and this will affect the performance and life of the product. To prevent this ensure that suitable ventilation is available (see below).
2. For installation indoors, ventilation ports and a ventilation fan should be equipped as needed.

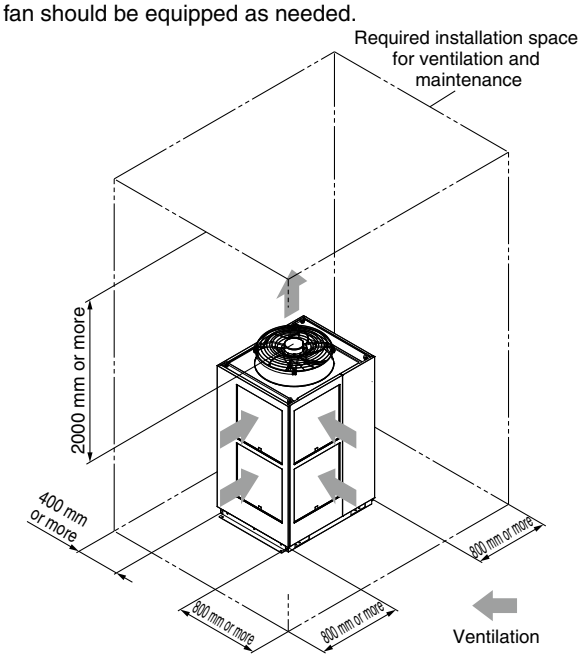

HRSH250-A

3. If it is impossible to exhaust heat from the installation area indoors, or when the installation area is conditioned, provide a duct for heat exhaustion to the air outlet port of this product for ventilation. Do not mount the inlet of the duct (flange) directly to the air vent of the product, and keep a space larger than the diameter of the duct. Additionally, consider the resistance of the duct when making the air vent port for the duct.

<Heat radiation amount/Required ventilation rate>

Model	Heat radiation amount [kW]	Required ventilation rate [m³/min]	
		Differential temp. of 3°C between inside and outside of installation area	Differential temp. of 6°C between inside and outside of installation area
HRSH100-A□-□	Approx. 18	305	155
HRSH150-A□-□	Approx. 29	490	245
HRSH200-A□-□	Approx. 35	590	295
HRSH250-A□-□	Approx. 44	730	365
HRSH300-A□-□	Approx. 45	760	380

4. If heat from the product cannot be sufficiently radiated due to a rise in the ambient temperature, a lack of ventilation, high elevation, etc., the refrigerant circuit pressure on the high pressure side will rise. As a result, the compressor will overload, affecting product performance and life, so be sure to check the value of the refrigerant circuit pressure on the high pressure side. Refer to the operation manual for details on how to check the value of the refrigerant circuit pressure on the high pressure side.

HRSH Series
Specific Product Precautions 4

Be sure to read this before handling the products. For safety instructions and temperature control equipment precautions, refer to the "Handling Precautions for SMC Products" and the "Operation Manual" on the SMC website: https://www.smcworld.com

Mounting/Installation

⚠ Caution

<Water-cooled refrigeration>

When installing the product, keep the space for maintenance as shown below.

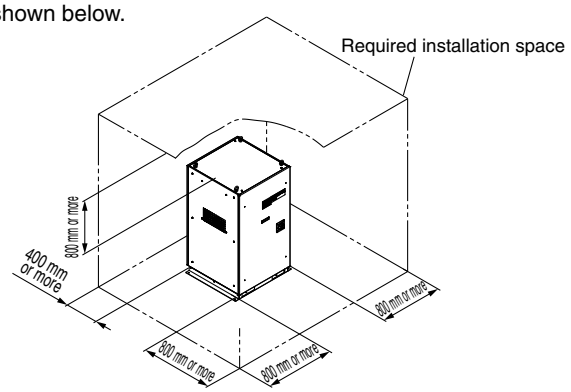

4. When using the product at a low ambient temperature (10°C or less), refer to "Operation at low ambient temperature or low circulating fluid temperature" (page 342).

Piping

⚠ Caution

1. The circulating fluid and facility water piping should be prepared by the customer with consideration of the operating pressure, temperature, and circulating fluid/facility compatibility.

If the operating performance is not sufficient, the pipings may burst during operation. Also, the use of corrosive materials such as aluminum or iron for fluid contact parts, such as piping, may not only lead to clogging or leakage in the circulating fluid and facility water circuits but also refrigerant leakage and other unexpected problems. Provide protection against corrosion when you use the product.

2. Select the piping port size which can exceed the rated flow.

For the rated flow, refer to the pump capacity table.

3. When tightening at the drain port of this product, use a pipe wrench to clamp the connection ports.

4. Supply water pressure to the automatic fluid fill port of this product should be 0.2 to 0.5 MPa.

This product has a built-in ball (float) tap. If you attach it to the faucet of a sink, etc. it will automatically supply water to the rated fluid level of the tank (halfway between HIGH and LOW.) If the water supply pressure is too high, the pipes may burst during use. Proceed with caution.

5. Ensure that piping is connected to the overflow port so that the circulating fluid can be exhausted to the drainage pit when the fluid level in the tank increases.

6. For the circulating fluid piping connection, install a drain pan and wastewater collection pit just in case the circulating fluid may leak.

7. This product series are constant-temperature fluid circulating machines with built-in tanks.

Do not install equipment on your system side such as pumps that forcibly return the circulating fluid to the unit. Also, if you attach an external tank that is open to the air, it may become impossible to circulate the circulating fluid. Proceed with caution.

8. The facility water flow rate is adjusted automatically according to the operating conditions.

In addition, the facility water return temperature is 60°C at maximum.

Electrical Wiring

⚠ Warning

Grounding should never be connected to a water line, gas line or lightning rod.

⚠ Caution

1. Power supply and communication cables should be prepared by user.

2. Provide a stable power supply which is not affected by surge or distortion.

If the voltage increase ratio (dV/dt) at the zero cross should exceed 40 V/200 μsec., it may result in malfunction.

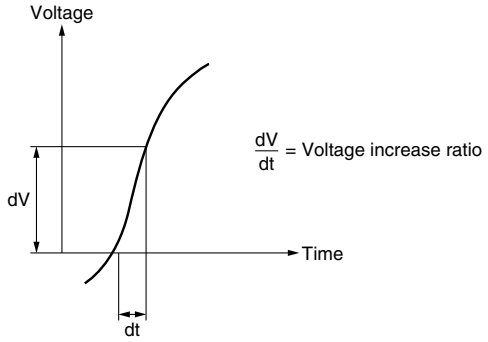

<For 400 V type and option B [With earth leakage breaker]>

3. This product is installed with a breaker with the following operating characteristics.

For the user's equipment (inlet side), use a breaker whose operating time is equal to or longer than the breaker of this product. If a breaker with shorter operating time is connected, the user's equipment could be cut off due to the inrush current of the motor of this product.

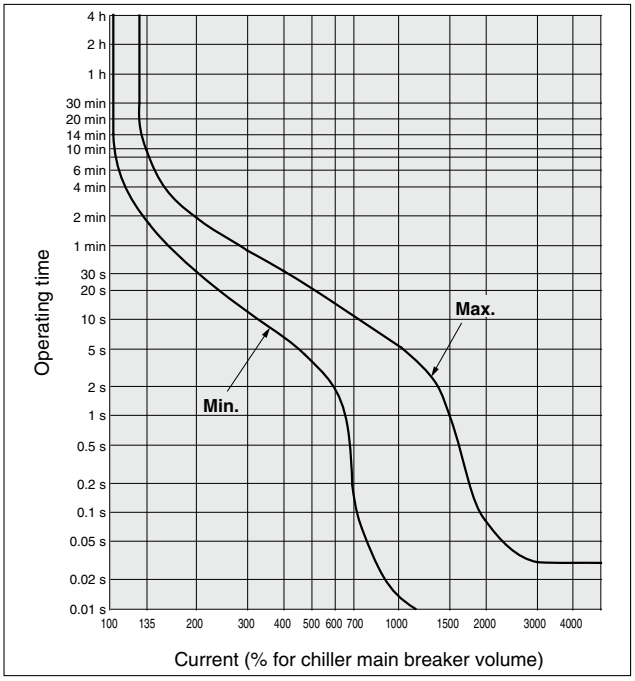

HRSH Series
Specific Product Precautions 5

Be sure to read this before handling the products. For safety instructions and temperature control equipment precautions, refer to the "Handling Precautions for SMC Products" and the "Operation Manual" on the SMC website: https://www.smcworld.com

Circulating Fluid

⚠ Caution

1. Avoid oil or other foreign matter entering the circulating fluid.

2. When water is used as a circulating fluid, SMC recommends the water quality shown in the following table as reference.
- Including water used for dilution of ethylene glycol aqueous solutions.
- In most areas, tap water can be used. However, if the tap water in the area is hard, there is a possibility of failure or performance decline due to limescale build-up. To soften the water and avoid problems, consider using water hardness filters.

Tap Water (as a Circulating Fluid) Quality Standards

The Japan Refrigeration and Air Conditioning Industry Association
JRA GL-02-1994 "Cooling water system – Circulation type – Make-up water"

	Item	Unit	Standard value	Influence	
				Corrosion	Scale generation
Standard item	pH (at 25°C)	—	6.0 to 8.0	○	○
	Electric conductivity (25°C)	[μS/cm]	100*1 to 300*1	○	○
	Chloride ion (Cl^-)	[mg/L]	50 or less	○	
	Sulfuric acid ion (SO_4^{2-})	[mg/L]	50 or less	○	
	Acid consumption amount (at pH4.8)	[mg/L]	50 or less		○
	Total hardness	[mg/L]	70 or less		○
	Calcium hardness ($CaCO_3$)	[mg/L]	50 or less		○
	Ionic state silica (SiO_2)	[mg/L]	30 or less		○
Reference item	Iron (Fe)	[mg/L]	0.3 or less	○	○
	Copper (Cu)	[mg/L]	0.1 or less	○	
	Sulfide ion (S_2^-)	[mg/L]	Should not be detected.	○	
	Ammonium ion (NH_4^+)	[mg/L]	0.1 or less	○	
	Residual chlorine (Cl)	[mg/L]	0.3 or less	○	
	Free carbon (CO_2)	[mg/L]	4.0 or less	○	

*1 In the case of [MΩ·cm], it will be 0.003 to 0.01.
- ○: Factors that have an effect on corrosion or scale generation.
- Even if the water quality standards are met, complete prevention of corrosion is not guaranteed.

3. Use an ethylene glycol aqueous solution that does not contain additives such as preservatives.

4. Refer to "Operation at low ambient temperature or low circulating fluid temperature" (page 342) for the concentration of the ethylene glycol aqueous solution.

5. When deionized water is used, the electric conductivity should be 1 μS/cm or higher (Electric resistivity: 1 MΩ·cm or lower).

Facility Water Supply

⚠ Warning

<Water-cooled refrigeration>

1. The water-cooled refrigeration type thermo-chiller radiates heat to the facility water.
Prepare the facility water system that satisfies the heat radiation and the facility water specifications below.

■ Required facility water system
<Heat radiation amount/Facility water specifications>

Model	Heat radiation [kW]	Facility water specifications
HRSH100-W□-□	Approx. 20	Refer to "Facility water system" in the specifications on pages 320 and 322.
HRSH150-W□-□	Approx. 27	
HRSH200-W□-□	Approx. 34	
HRSH250-W□-□	Approx. 40	

Facility Water Supply

⚠ Warning

2. When using tap water as facility water, SMC recommends the water quality shown in the following table as reference.
- In most areas, tap water can be used. However, if the tap water in the area is hard, there is a possibility of failure or performance decline due to limescale build-up. To soften the water and avoid problems, consider using water hardness filters.

Tap Water (as Facility Water) Quality Standards

The Japan Refrigeration and Air Conditioning Industry Association
JRA GL-02-1994 "Cooling water system – Circulation type – Make-up water"

	Item	Unit	Standard value	Influence	
				Corrosion	Scale generation
Standard item	pH (at 25°C)	—	6.5 to 8.2	○	○
	Electric conductivity (25°C)	[μS/cm]	100*1 to 800*1	○	○
	Chloride ion (Cl^-)	[mg/L]	200 or less	○	
	Sulfuric acid ion (SO_4^{2-})	[mg/L]	200 or less	○	
	Acid consumption amount (at pH4.8)	[mg/L]	100 or less		○
	Total hardness	[mg/L]	200 or less		○
	Calcium hardness ($CaCO_3$)	[mg/L]	150 or less		○
	Ionic state silica (SiO_2)	[mg/L]	50 or less		○
Reference item	Iron (Fe)	[mg/L]	1.0 or less	○	○
	Copper (Cu)	[mg/L]	0.3 or less	○	
	Sulfide ion (S_2^-)	[mg/L]	Should not be detected.	○	
	Ammonium ion (NH_4^+)	[mg/L]	1.0 or less	○	
	Residual chlorine (Cl)	[mg/L]	0.3 or less	○	
	Free carbon (CO_2)	[mg/L]	4.0 or less	○	

*1 In the case of [MΩ·cm], it will be 0.001 to 0.01.
- ○: Factors that have an effect on corrosion or scale generation.
- Even if the water quality standards are met, complete prevention of corrosion is not guaranteed.

3. Set the supply pressure between 0.3 to 0.5 MPa. Ensure a pressure difference at the facility water inlet/outlet of 0.3 MPa or more.
If the supply pressure is high, it will cause water leakage. If the supply pressure and pressure difference at the facility water inlet/outlet is low, it will cause an insufficient flow rate of the facility water, and poor temperature control.

Operation

⚠ Warning

1. Confirmation before operation
1) The fluid level of a tank should be within the specified range of "HIGH" and "LOW."
When exceeding the specified level, the circulating fluid will overflow.
2) Remove the air.
Conduct a trial operation, looking at the fluid level.
Since the fluid level will go down when the air is removed from the user's piping system, supply water once again when the fluid level is reduced. When there is no reduction in the fluid level, the job of removing the air is completed.
Pump can be operated independently.

2. Confirmation during operation
- Check the circulating fluid temperature.
The operating temperature range of the circulating fluid is between 5 and 35°C.
When the amount of heat generated from the user's equipment is greater than the product's capability, the circulating fluid temperature may exceed this range. Use caution regarding this matter.

3. Emergency stop method
- When an abnormality is confirmed, stop the machine immediately. After the machine has stopped, make sure to turn off the breaker of the user's equipment (on the upstream side).

Specific Product Precautions 6

Be sure to read this before handling the products. For safety instructions and temperature control equipment precautions, refer to the "Handling Precautions for SMC Products" and the "Operation Manual" on the SMC website: https://www.smcworld.com

Operation Restart Time/Operation and Suspension Frequency

⚠ Caution

1. **Wait five minutes or more before restarting operation after it has been stopped. If the operation is restarted within five minutes, the protection circuit may activate and the operation may not start properly.**
2. **Operation and suspension frequency should not exceed 10 times per day. Frequently switching between operation and suspension may result in the malfunction of the refrigeration circuit.**

Protection Circuit

⚠ Caution

If operating in the below conditions, the protection circuit will activate and an operation may not be performed or will stop.

- Power supply voltage is not within the rated voltage range of ±10%.
- In case the water level inside the tank is reduced abnormally.
- Circulating fluid temperature is too high.
- Compared to the cooling capacity, the heat generation amount of the user's equipment is too high.
- Ambient temperature is over 45°C.
- Ventilation hole is clogged with dust or dirt.

Maintenance

⚠ Caution

<Periodical inspection every one month>

Clean the ventilation hole.

If the dustproof filter of water-cooled type product becomes clogged with dust or debris, a decline in cooling performance can result.
In order to avoid deforming or damaging the dustproof filter, clean it with a long-haired brush or air gun.

<Periodical inspection every three months>

Inspect the circulating fluid.

1. When using tap water or deionized water
   - Replacement of circulating fluid
     Failure to replace the circulating fluid can lead to the development of bacteria or algae. Replace it regularly depending on your usage conditions.
2. When using ethylene glycol aqueous solution
   Use a concentration meter to confirm that the concentration does not exceed 15%.
   Dilute or add as needed to adjust the concentration.

<Periodical inspection during the winter season>

1. **Make water-removal arrangements beforehand.**
   If there is a risk of the circulating fluid and facility water freezing when the product is stopped, release the circulating fluid and facility water in advance.

Maintenance

⚠ Caution

<Periodical inspection during the summer season>

Check the value of the refrigerant circuit pressure on the high pressure side.

If heat from the product cannot be sufficiently radiated due to a rise in the ambient temperature, a lack of ventilation, high elevation, etc., the refrigerant circuit pressure on the high pressure side will rise. As a result, the compressor will overload, affecting product performance and life.
Refer to the operation manual for details on how to check the value of the refrigerant circuit pressure on the high pressure side.

■ Refrigerant with GWP reference

Refrigerant	Global Warming Potential (GWP)		
	Regulation (EU) 2024/573, AIM Act 40 CFR Part 84	Fluorocarbon Emissions Control Act (Japan)	
		GWP value labeled on products	GWP value to be used for reporting the calculated amount of leakage
R134a	1,430	1,430	1,300
R404A	3,922	3,920	3,940
R407C	1,774	1,770	1,620
R410A	2,088	2,090	1,920
R448A	1,386	1,390	1,270
R454C	146	145	146

∗ This product is hermetically sealed and contains fluorinated greenhouse gases (HFC). When this product is sold on the market in the EU after January 1, 2017, it needs to be compliant with the quota system of the F-Gas Regulation in the EU.
∗ See specification table for refrigerant used in the product.