Direct Operated 2 Port Solenoid Valve

VX21/22/23 Series

Air

Medium vacuum

Water

Oil

Steam

∗ Can be used with heated water.

Note) For details, refer to the UL-compliance table on page 52 and onwards.

RoHS

Large flow rate

Flow rate

20% More flow∗

(Size 1)

Compact

Height

10% Smaller∗

(Size 1)

Lightweight

Weight

30% Lighter∗

(Size 1, Aluminum body)

∗ Comparison with SMC current model

Body material

Air
Aluminum, Resin
Water/Oil/
Medium vacuum/Steam
C37 (Brass),
Stainless steel

With One-touch fittings (Resin body)

Bracket
Standard equipment

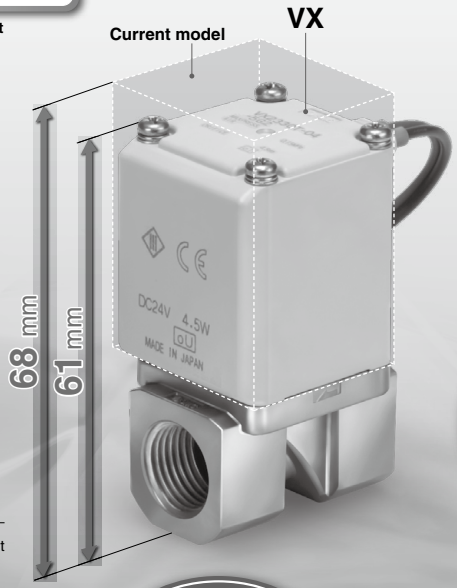

Enclosure

IP65∗

∗ Electrical entry Flat terminal type terminal is IP40.

Power consumption

4.5 W (Size 1)
7 W (Size 2)
10.5 W (Size 3)
(DC/N.C. valve)

Manifold

Material
- Body/PPS
- Base/Aluminum
- Seal/NBR, FKM

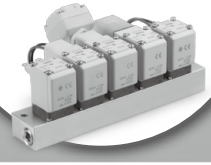

Solenoid coil type

- Insulation type Class B/H
- Fluid temperature
  Class B/Max. 60°C
  Class H/Max. 183°C

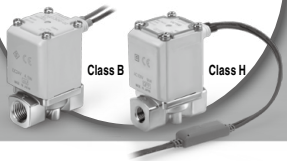

Valve type

N.C. N.O.

Direct Operated 2 Port Solenoid Valve

Air | Medium vacuum | Water | Oil | Steam
∗ Can be used with heated water.

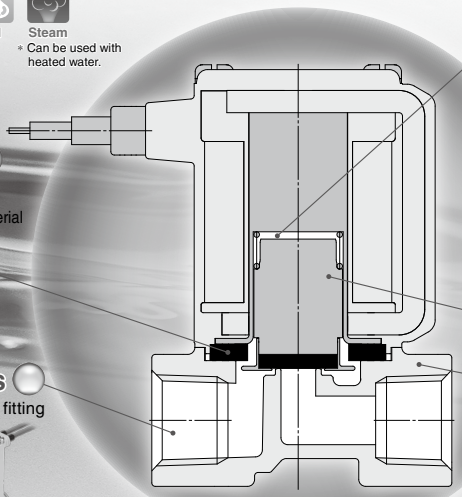

Enclosure
IP65

Flame resistance
UL94V-0 conformed
Flame resistant mold coil material

Low-noise construction
Metal noise reduced by the rubber bumper

Piping variations
Thread piping, One-touch fitting

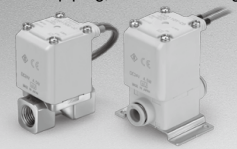

Clearance
By providing a bumper and clearance, we reduced the collision sound of the core when ON (when the valve is open). Because of the clearance, when using highly viscous fluids such as oil, the armature does not get stuck and the responsiveness when OFF (when the valve is closed) is improved.

Power consumption
∗ DC/Class B, N.C. valve
4.5 W (Size 1)
7 W (Size 2)
10.5 W (Size 3)

Improved armature durability

Body material
Air Aluminum, Resin
Water/ Oil/ Medium vacuum/ Steam C37 (Brass), Stainless steel

Full-wave rectifier type (AC specification: Insulation type Class B/H)

Improved durability
Service life is extended by the special construction. (compared with current shading coil)

Reduced buzz noise
Rectified to DC by the full-wave rectifier, resulting in a buzz noise reduction.

Reduced apparent power ∗ Class B, N.C. valve
10 VA→**7** VA (Size 1) 20 VA→**9.5** VA (Size 2)
32 VA→**12** VA (Size 3)

Improved OFF response
Specially constructed to improve the OFF response when operated with a higher viscosity fluid such as oil.

Low-noise construction
Specially constructed to reduce the metal noise during operation.

Variations

<Fluid>

Model	Applicable fluid ∗1 (∗ Can be used with heated water.)				
	Air	Medium vacuum	Water	Oil	Steam
For Air **VX2□0** Page 33	●	—	—	—	—
For Medium vacuum **VX2□4** Page 38	●∗2	●	—	—	—
For Water **VX2□2** Page 42	●∗2	—	●	—	—
For Oil **VX2□3** Page 44	●∗2	—	●∗2	●	—
For Steam ∗ Can be used with heated water. **VX2□5** Page 46	●∗2	—	●∗2	●∗2	●

∗1 For details, refer to pages 73 and 74. ∗2 Refer to the individual specifications for each fluid.

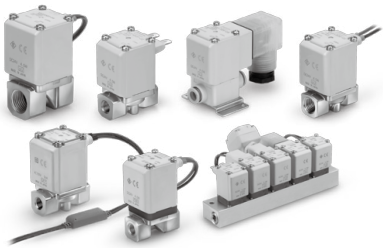

<Body Size>

Model	Body size	Orifice diameter							Port size
		2 mmø	3 mmø	4 mmø	5 mmø	7 mmø	8 mmø	10 mmø Note)	
VX2$^{1}_{4}$	**Size 1**	●	●	—	●	—	—	—	1/8, 1/4 One-touch fitting: ø6, ø8
VX2$^{2}_{5}$	**Size 2**	—	—	●	—	●	—	—	1/4, 3/8 One-touch fitting: ø8, ø10
VX2$^{3}_{6}$	**Size 3**	—	—	—	●	—	●	●	1/4, 3/8, 1/2 One-touch fitting: ø10, ø12

Note) N.C. only

INDEX

Direct Operated 2 Port Solenoid Valve
VX21/22/23 Series

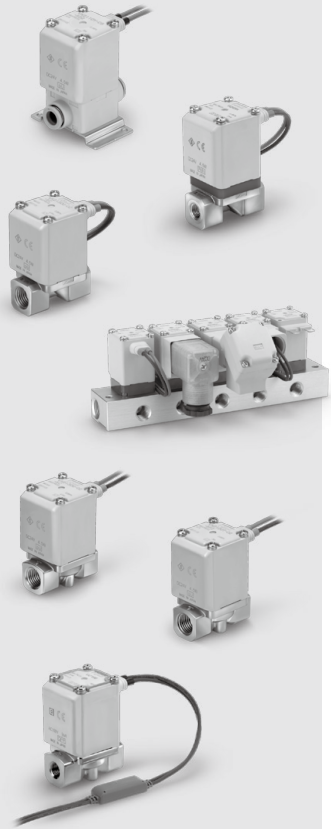

Single Unit/Manifold: Specifications 30
Common Specifications 31
Selection Steps 32

For Air
Model/Valve Specifications, Fluid and Ambient Temperature, Valve Leakage Rate ... 33, 34
How to Order (Single Unit) 35
Model/Valve Specifications, Fluid and Ambient Temperature, Valve Leakage Rate ... 36
How to Order (Solenoid Valve for Manifold, Manifold Base), Blanking Plate Assembly Part No., How to Order Manifold Assembly (Example) ... 37

For Medium Vacuum (0.1 Pa·abs or more)
Model/Valve Specifications, Fluid and Ambient Temperature, Valve Leakage Rate ... 38
How to Order (Single Unit) 39
Model/Valve Specifications, Fluid and Ambient Temperature, Valve Leakage Rate ... 40
How to Order (Solenoid Valve for Manifold, Manifold Base), Blanking Plate Assembly Part No., How to Order Manifold Assembly (Example) ... 41

For Water
Model/Valve Specifications, Fluid and Ambient Temperature, Valve Leakage Rate ... 42
How to Order (Single Unit) 43

For Oil
Model/Valve Specifications, Fluid and Ambient Temperature, Valve Leakage Rate ... 44
How to Order (Single Unit) 45

For Steam * Can be used with heated water.
Model/Valve Specifications, Fluid and Ambient Temperature, Valve Leakage Rate ... 46
How to Order (Single Unit) 47

Special Options 49
UL-compliant 52
Construction
Single Unit 54
Manifold 55
Dimensions (Single Unit) Body material: Aluminum 56
Body material: Resin 58
Body material: C37, Stainless steel ... 60
(Manifold) Base material: Aluminum 63
Replacement Parts 64
Glossary of Terms 65
Solenoid Valve Flow Rate Characteristics 66
Flow Rate Characteristics 71
Specific Product Precautions 73

Direct Operated 2 Port Solenoid Valve
VX21/22/23 Series
For Air, Medium Vacuum, Water, Oil and Steam

Variations

Single Unit (For Air, Medium Vacuum, Water, Oil and Steam)

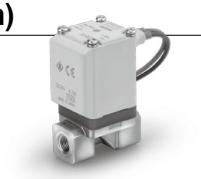

■ Valve type

Normally Closed (N.C.)
Normally Open (N.O.)

■ Solenoid coil type

Insulation type: Class B, Class H

■ Rated voltage

100 V/200 V/110 V/230 VAC
(220 V/240 V/48 V/24 VAC)
24 VDC (12 VDC)

Voltage in ( ) indicates special voltage.

■ Material

Body — Aluminum, Resin, C37 (Brass), Stainless steel
Seal — NBR, FKM*

* Refer to individual pages for details of each fluid.

■ Electrical entry

- Grommet
- Conduit
- DIN terminal
- Conduit terminal
- Flat terminal

Normally Closed (N.C.) **Normally Open (N.O.)**

Size		Size 1	Size 2	Size 3
Orifice diameter	2 mmø	●	—	—
	3 mmø	●	—	—
	4 mmø	—	●	—
	5 mmø	●	—	●
	7 mmø	—	●	—
	8 mmø	—	—	●
	10 mmø	—	—	●*
Port size		1/8, 1/4 ø6, ø8	1/4, 3/8 ø8, ø10	1/4, 3/8, 1/2 ø10, ø12

* N.C. only

Manifold (For Air, Medium Vacuum)

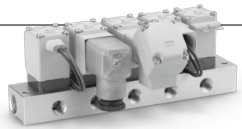

■ Valve type

Normally Closed (N.C.)
Normally Open (N.O.)

■ Manifold type

Common SUP type
Individual SUP type

■ Solenoid coil type

Insulation type: Class B

■ Rated voltage

100 V/200 V/110 V/230 VAC
(220 V/240 V/48 V/24 VAC)
24 VDC (12 VDC)

Voltage in ( ) indicates special voltage.

■ Material

Body — Resin
Base — Aluminum
Seal — NBR, FKM

■ Electrical entry

- Grommet
- Conduit
- DIN terminal
- Conduit terminal
- Flat terminal

Manifold

Size			Size 1	Size 2	Size 3
Orifice diameter		2 mmø	●	—	—
		3 mmø	●	—	—
		4 mmø	—	●	—
		5 mmø	●	—	●
		7 mmø	—	●	●
Port size	Common SUP type (Air)	IN	3/8		
		OUT	1/8, 1/4		
	Individual SUP type (Medium vacuum)	IN	1/8, 1/4		
		OUT	3/8		

Common Specifications

Standard Specifications

Valve specifications	**Valve construction**		Direct operated poppet
	Withstand pressure		2.0 MPa (Resin body type 1.5 MPa)
	Body material		Aluminum, Resin, C37 (Brass), Stainless steel
	Seal material Note 3)		NBR, FKM
	Enclosure		Dust-tight, Water-jet-proof type (IP65) Note 1,4)
	Environment		Location without the presence of corrosive gases, explosive gases, or constant water adhesion Note 4)
Coil specifications	**Rated voltage**	**AC**	100 VAC, 200 VAC, 110 VAC, 230 VAC, (220 VAC, 240 VAC, 48 VAC, 24 VAC) Note 2)
		DC	24 VDC, (12 VDC) Note 2)
	Allowable voltage fluctuation		±10% of rated voltage
	Allowable leakage voltage	**AC**	5% or less of rated voltage
		DC	2% or less of rated voltage
	Coil insulation type		Class B, Class H

Note 1) Electrical entry flat terminal type terminal is IP40.
Note 2) Voltage in ( ) indicates special voltage. (Refer to page 49.)
Note 3) For seal material/EPDM, refer to X332. (Refer to page 51.)
Note 4) For enclosure, refer to "Glossary of Terms" on page 65.

⚠ **Be sure to read "Specific Product Precautions" before handling.**

Solenoid Coil Specifications

Normally Closed (N.C.)

DC Specification

Class B

Size	Power consumption (W) Note 1)	Temperature rise (°C) Note 2)
Size 1	4.5	50
Size 2	7	55
Size 3	10.5	65

Class H

Size	Power consumption (W) Note 1)	Temperature rise (°C) Note 2)
Size 1	9	100
Size 2	12	100
Size 3	15	100

Note 1) Power consumption: The value at ambient temperature of 20°C and when the rated voltage is applied. (Variation: ±10%)
Note 2) The value at ambient temperature of 20°C and when the rated voltage is applied. The value depends on the ambient environment. This is for reference.

AC Specification (Built-in Full-wave Rectifier Type)

Class B

Size	Apparent power (VA) Note 1) 2)	Temperature rise (°C) Note 3)
Size 1	7	60
Size 2	9.5	70
Size 3	12	70

Class H

Size	Apparent power (VA) Note 1) 2)	Temperature rise (°C) Note 3)
Size 1	9	100
Size 2	12	100
Size 3	15	100

Note 1) Apparent power: The value at ambient temperature of 20°C and when the rated voltage is applied. (Variation: ±10%)
Note 2) There is no difference in the frequency and the inrush and energized apparent power, since a rectifying circuit is used in the AC.
Note 3) The value at ambient temperature of 20°C and when the rated voltage is applied. The value depends on the ambient environment. This is for reference.

Normally Open (N.O.)

DC Specification

Class B

Size	Power consumption (W) Note 1)	Temperature rise (°C) Note 2)
Size 1	7.5	60
Size 2	8.5	70
Size 3	12.5	70

Class H

Size	Power consumption (W) Note 1)	Temperature rise (°C) Note 2)
Size 1	9	100
Size 2	12	100
Size 3	15	100

Note 1) Power consumption: The value at ambient temperature of 20°C and when the rated voltage is applied. (Variation: ±10%)
Note 2) The value at ambient temperature of 20°C and when the rated voltage is applied. The value depends on the ambient environment. This is for reference.

AC Specification (Built-in Full-wave Rectifier Type)

Class B

Size	Apparent power (VA) Note 1) 2)	Temperature rise (°C) Note 3)
Size 1	9	60
Size 2	10	70
Size 3	14	70

Class H

Size	Apparent power (VA) Note 1) 2)	Temperature rise (°C) Note 3)
Size 1	9	100
Size 2	12	100
Size 3	15	100

Note 1) Apparent power: The value at ambient temperature of 20°C and when the rated voltage is applied. (Variation: ±10%)
Note 2) There is no difference in the frequency and the inrush and energized apparent power, since a rectifying circuit is used in the AC.
Note 3) The value at ambient temperature of 20°C and when the rated voltage is applied. The value depends on the ambient environment. This is for reference.

Selection Steps

Selection Steps

Step 1 **Select the fluid.**

Item	Selection item	Page	Symbol	
Select the fluid.	Air	Page 33, 34	0	❶
	Water	Page 42	2	
	Oil	Page 44	3	
	Medium vacuum	Page 38	4	
	Steam ※ Can be used with heated water.	Page 46	5	

VX2 3 0 A A
❶

Step 2 **Select "Body material", "Port size" and "Orifice diameter" from "Flow rate — Pressure" of each fluid.**

Item	Selection item		Symbol	
Select from "Flow rate — Pressure." ● Body material ● Port size ● Orifice diameter	Size	Size 3	3	❷
	Body material	Aluminum	A	❸
	Port size	1/8		
	Orifice diameter	2		

VX2 3 0 A A
❷ ❸

Step 3 **Select electrical specification.**

Item	Selection item		Symbol	
Select electrical specification.	Voltage	24 VDC	A	❹
	Electrical entry	Grommet		

VX2 3 0 A A
❹

Step 4 **For special options, refer to pages 49 to 51.**

For Air Single Unit

Model/Valve Specifications

N.C.

Symbol

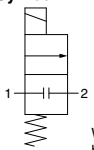

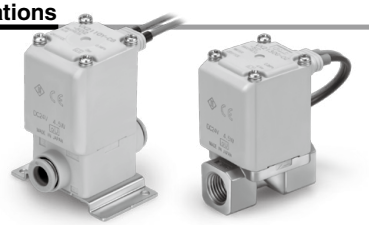

When the valve is closed, flow is blocked from port 1 to port 2. However, if the pressure in port 2 is higher than port 1, the valve will not be able to block the fluid and it will flow from port 2 to port 1.

Aluminum Body Type

Size	Port size	Orifice diameter (mmø) Note 1)	Model	Flow rate characteristics Note 2) C [dm³/(s·bar)]	b	Cv	Maximum operating pressure differential (MPa) Note 4)	Max. system pressure (MPa) Note 4)	Weight (g) Note 3)
1	1/8, 1/4	2	VX210	0.63	0.63	0.23	1.0	1.0	220
		3		1.05	0.68	0.41	0.6		220
		5		2.20	0.39	0.62	0.2		220
2	1/4, 3/8	4	VX220	1.90	0.52	0.62	1.0		340
		7		3.99	0.44	1.08	0.15		340
3	1/4, 3/8	5	VX230	1.96	0.55	0.75	1.0		450
		8		5.67	0.33	1.58	0.3		450
		10		5.74	0.64	2.21	0.1		450
	1/2	10		8.42	0.39	2.21	0.1		470

Resin Body Type (Built-in One-touch Fittings)

Size	Port size	Orifice diameter (mmø) Note 1)	Model	Flow rate characteristics Note 2) C [dm³/(s·bar)]	b	Cv	Maximum operating pressure differential (MPa) Note 4)	Max. system pressure (MPa) Note 4)	Weight (g) Note 3)
1	ø6	2	VX210	0.82	0.44	0.23	1.0	1.0	220
		3		1.25	0.34	0.35	0.6		220
		5		1.45	0.43	0.40	0.2		220
	ø8	2		0.82	0.44	0.23	1.0		220
		3		1.81	0.40	0.41	0.6		220
		5		2.11	0.32	0.56	0.2		220
2	ø8	4	VX220	1.69	0.40	0.47	1.0		340
		7		3.14	0.34	0.84	0.15		340
	ø10	4		1.68	0.49	0.50	1.0		340
		7		3.54	0.36	0.90	0.15		340
3	ø10	5	VX230	2.50	0.44	0.70	1.0		460
		8		2.77	0.82	1.22	0.3		460
		10		5.69	0.46	1.54	0.1		460
	ø12	5		2.50	0.44	0.70	1.0		460
		8		2.56	0.88	1.38	0.3		460
		10		5.69	0.64	1.76	0.1		460

Note 1) The orifice size is just as a reference guide. Check the flow rate characteristics (conversion Cv).
Note 2) The flow rate characteristics of this product have variations.
When the highly precise flow control is required according to the system to be used, select an orifice diameter 1.3 times larger than that shown above and install a restrictor on the downstream side of the solenoid valve to make the adjustment.
Note 3) Weight of grommet type. Add 10 g for conduit type, 30 g for DIN terminal type, 60 g for conduit terminal type respectively.
Note 4) Refer to "Glossary of Terms" on page 65 for details on the maximum operating pressure differential and the maximum system pressure.

Fluid and Ambient Temperature

Fluid temperature (°C)	Ambient temperature (°C)
−10 Note) to 60	−20 to 60

Note) Dew point temperature: −10°C or less

Valve Leakage Rate

Internal Leakage

Seal material Note 2)	Leakage rate (Air) Note 1)
NBR (FKM)	1 cm³/min or less (Aluminum body type)
	15 cm³/min or less (Resin body type)

External Leakage

Seal material Note 2)	Leakage rate (Air) Note 1)
NBR (FKM)	1 cm³/min or less (Aluminum body type)
	15 cm³/min or less (Resin body type)

Note 1) Leakage is the value at ambient temperature 20°C.
Note 2) For seal material/FKM, refer to "Other Options" on page 49 for the selection.
Note 3) The amount of leakage is the value at a differential pressure of 0.01 MPa or more, and a temperature of 20°C.

For Air Single Unit

Model/Valve Specifications

N.O.

Symbol

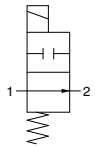

When the valve is closed, flow is blocked from port 1 to port 2. However, if the pressure in port 2 is higher than port 1, the valve will not be able to block the fluid and it will flow from port 2 to port 1.

Aluminum Body Type

Size	Port size	Orifice diameter (mmø) Note 1)	Model	Flow rate characteristics Note 2)			Maximum operating pressure differential (MPa) Note 4)	Max. system pressure (MPa) Note 4)	Weight Note 3) (g)
				C [dm³/(s·bar)]	b	Cv			
1	1/8, 1/4	2	VX240	0.63	0.63	0.23	0.9	1.0	240
		3		1.05	0.68	0.41	0.45		240
		5		2.20	0.39	0.62	0.2		240
2	1/4, 3/8	4	VX250	1.90	0.52	0.62	0.8		370
		7		3.99	0.44	1.08	0.15		370
3	1/4, 3/8	5	VX260	1.96	0.55	0.75	0.8		490
		8		5.67	0.33	1.58	0.3		490

Resin Body Type (Built-in One-touch Fittings)

Size	Port size	Orifice diameter (mmø) Note 1)	Model	Flow rate characteristics Note 2)			Maximum operating pressure differential (MPa) Note 4)	Max. system pressure (MPa) Note 4)	Weight Note 3) (g)
				C [dm³/(s·bar)]	b	Cv			
1	ø6	2	VX240	0.82	0.44	0.23	0.9	1.0	240
		3		1.25	0.34	0.35	0.45		240
		5		1.45	0.43	0.40	0.2		240
	ø8	2		0.82	0.44	0.23	0.9		240
		3		1.81	0.40	0.41	0.45		240
		5		2.11	0.32	0.56	0.2		240
2	ø8	4	VX250	1.69	0.40	0.47	0.8		370
		7		3.14	0.34	0.84	0.15		370
	ø10	4		1.68	0.49	0.50	0.8		370
		7		3.54	0.36	0.90	0.15		370
3	ø10	5	VX260	2.50	0.44	0.70	0.8		500
		8		2.77	0.82	1.22	0.3		500
	ø12	5		2.50	0.42	0.70	0.8		500
		8		2.56	0.88	1.38	0.3		500

Note 1) The orifice size is just as a reference guide. Check the flow rate characteristics (conversion Cv).
Note 2) The flow rate characteristics of this product have variations.
When the highly precise flow control is required according to the system to be used, select an orifice diameter 1.3 times larger than that shown above and install a restrictor on the downstream side of the solenoid valve to make the adjustment.
Note 3) Weight of grommet type. Add 10 g for conduit type, 30 g for DIN terminal type, 60 g for conduit terminal type respectively.
Note 4) Refer to “Glossary of Terms” on page 65 for details on the maximum operating pressure differential and the maximum system pressure.

Fluid and Ambient Temperature

Fluid temperature (°C)	Ambient temperature (°C)
–10 Note) to 60	–20 to 60

Note) Dew point temperature: –10°C or less

Valve Leakage Rate

Internal Leakage

Seal material Note 2)	Leakage rate (Air) Note 1)
NBR (FKM)	1 cm³/min or less (Aluminum body type)
	15 cm³/min or less (Resin body type)

External Leakage

Seal material Note 2)	Leakage rate (Air) Note 1)
NBR (FKM)	1 cm³/min or less (Aluminum body type)
	15 cm³/min or less (Resin body type)

Note 1) Leakage is the value at ambient temperature 20°C.
Note 2) For seal material/FKM, refer to “Other Options” on page 49 for the selection.
Note 3) The amount of leakage is the value at a differential pressure of 0.01 MPa or more, and a temperature of 20°C.

How to Order (Single Unit)

Note) Refer to the table on page 52 for UL-compliant.

RoHS

VX2 1 0 A A

Fluid

0	Air

Common Specifications

Seal material	NBR
Coil insulation type	Class B
Thread type	Rc*

* One-touch fittings are attached to the resin body type.

Coil size/Valve type

Size	Symbol	Valve type
Size 1	1	N.C.
	4	N.O.
Size 2	2	N.C.
	5	N.O.
Size 3	3	N.C.
	6	N.O.

Body material/Port size/Orifice diameter

Symbol	Body material	Port size	Orifice diameter
A	Aluminum	1/8	2
B			3
C			5
D		1/4	2
E			3
F			5
H	Resin (With bracket)	ø6	2
J			3
K			5
L		ø8	2
M			3
N			5
A	Aluminum	1/4	4
B			7
D		3/8	4
E			7
H	Resin (With bracket)	ø8	4
J			7
L		ø10	4
M			7
A	Aluminum	1/4	5
B			8
C			10 (N.C. only)
D		3/8	5
E			8
F			10 (N.C. only)
G		1/2	10 (N.C. only)
H	Resin (With bracket)	ø10	5
J			8
K			10 (N.C. only)
L		ø12	5
M			8
N			10 (N.C. only)

Voltage/Electrical entry

Symbol	Voltage	Electrical entry
A	24 VDC	Grommet 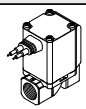
B	100 VAC	Grommet (With surge voltage suppressor) 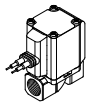
C	110 VAC	
D	200 VAC	
E	230 VAC	
F	24 VDC	
G	24 VDC	DIN terminal (With surge voltage suppressor) 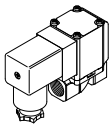
H	100 VAC	
J	110 VAC	
K	200 VAC	
L	230 VAC	
M	24 VDC	Conduit terminal (With surge voltage suppressor) 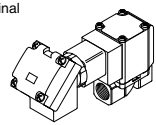
N	100 VAC	
P	110 VAC	
Q	200 VAC	
R	230 VAC	
S	24 VDC	Conduit (With surge voltage suppressor)
T	100 VAC	
U	110 VAC	
V	200 VAC	
W	230 VAC	
Y	24 VDC	Flat terminal 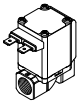
Z	Other voltages	

For special options, refer to pages 49 to 51.

Special voltage	24 VAC
	48 VAC
	220 VAC
	240 VAC
	12 VDC
DIN terminal with light	
Conduit terminal with light	
Without DIN connector	

Low concentration ozone resistant (Seal material: FKM)
Seal material: EPDM
Oil-free
G thread
NPT thread
With bracket (Aluminum body only)
Mounting holes on the bottom side of the body (Aluminum body only)
Special electrical entry direction

Dimensions → Pages 56 to 59 (Single unit)

For Air Manifold

Model/Valve Specifications

N.C.

Symbol

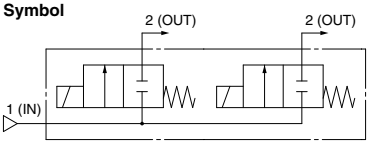

Common SUP type

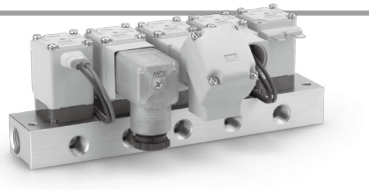

N.O.

Symbol

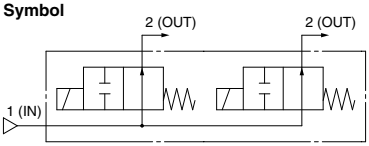

Common SUP type

When the valve is closed, flow is blocked from port 1 to port 2. However, if the pressure in port 2 is higher than port 1, the valve will not be able to block the fluid and it will flow from port 2 to port 1.

Normally Closed (N.C.)

Size	Orifice diameter (mmø) Note 1)	Model	Flow rate characteristics Note 2)			Maximum operating pressure differential (MPa) Note 3)	Max. system pressure (MPa) Note 3)
			C [dm³/(s·bar)]	b	Cv		
1	2	VX2A0	0.63	0.63	0.23	1.0	1.0
	3		1.05	0.68	0.41	0.6	
	5		2.20	0.39	0.62	0.2	
2	4	VX2B0	1.90	0.52	0.62	1.0	
	7		3.99	0.44	1.08	0.15	
3	5	VX2C0	1.96	0.55	0.75	1.0	
	7		3.99	0.44	1.08	0.3	

Normally Open (N.O.)

Size	Orifice diameter (mmø) Note 1)	Model	Flow rate characteristics Note 2)			Maximum operating pressure differential (MPa) Note 3)	Max. system pressure (MPa) Note 3)
			C [dm³/(s·bar)]	b	Cv		
1	2	VX2D0	0.63	0.63	0.23	0.9	1.0
	3		1.05	0.68	0.41	0.45	
	5		2.20	0.39	0.62	0.2	
2	4	VX2E0	1.90	0.52	0.62	0.8	
	7		3.99	0.44	1.08	0.15	
3	5	VX2F0	1.96	0.55	0.75	0.8	
	7		3.99	0.44	1.08	0.3	

Note 1) The orifice size is just as a reference guide. Check the flow rate characteristics (conversion Cv).
Note 2) The flow rate characteristics of this product have variations.
When the highly precise flow control is required according to the system to be used, select an orifice diameter 1.3 times larger than that shown above and install a restrictor on the downstream side of the solenoid valve to make the adjustment.
Note 3) Refer to “Glossary of Terms” on page 65 for details on the maximum operating pressure differential and the maximum system pressure.

Fluid and Ambient Temperature

Fluid temperature (°C)	Ambient temperature (°C)
–10 Note) to 60	–20 to 60

Note) Dew point temperature: –10°C or less

Valve Leakage Rate

Internal Leakage

Seal material Note 2)	Leakage rate Note 1)
NBR (FKM)	1 cm³/min or less

External Leakage

Seal material Note 2)	Leakage rate Note 1)
NBR (FKM)	1 cm³/min or less

Note 1) Leakage is the value at ambient temperature 20°C.
Note 2) For seal material/FKM, refer to “Other Options” on page 49 for the selection.
Note 3) The amount of leakage is the value at a differential pressure of 0.01 MPa or more, and a temperature of 20°C.

How to Order (Solenoid Valve for Manifold)

VX2 A 0 A A

Fluid

0	Air

Common Specifications

Seal material	NBR
Coil insulation type	Class B

Coil size/Valve type

Size	Symbol	Valve type
Size 1	A	N.C.
	D	N.O.
Size 2	B	N.C.
	E	N.O.
Size 3	C	N.C.
	F	N.O.

Body material/Orifice diameter

Symbol	Body material	Orifice diameter
A	Resin	2
B		3
C		5
A	Resin	4
B		7
A	Resin	5
B		7

Voltage/Electrical entry

Symbol	Voltage	Electrical entry
A	24 VDC	Grommet
B	100 VAC	Grommet (With surge voltage suppressor)
C	110 VAC	
D	200 VAC	
E	230 VAC	
F	24 VDC	
G	24 VDC	DIN terminal (With surge voltage suppressor)
H	100 VAC	
J	110 VAC	
K	200 VAC	
L	230 VAC	
M	24 VDC	Conduit terminal (With surge voltage suppressor)
N	100 VAC	
P	110 VAC	
Q	200 VAC	
R	230 VAC	
S	24 VDC	Conduit (With surge voltage suppressor)
T	100 VAC	
U	110 VAC	
V	200 VAC	
W	230 VAC	
Y	24 VDC	Flat terminal
Z	Other voltages	

For special options, refer to pages 49 to 51.

Special voltage	24 VAC
	48 VAC
	220 VAC
	240 VAC
	12 VDC
DIN terminal with light	
Conduit terminal with light	
Without DIN connector	
Seal material: EPDM	
Low concentration ozone resistant (Seal material: FKM)	
Oil-free	
Special electrical entry direction	

⚠Caution

Mounting orientation exists when mounting valves onto manifold base. Refer to page 76 for details.

Manifold Base/How to Order

VVX2 1 0 A 02 ☐

Fluid

0	Air

Coil size

Size	Symbol
Size 1	1
Size 2	2
Size 3	3

Base material/Port size/Base type

Symbol	Base material	Individual port size	Base type
A	Aluminum	1/8	Common
B		1/4	SUP

Common port size: 3/8 (IN port)

Stations

Symbol	Stations
02	2 stations
03	3 stations
04	4 stations
05	5 stations
06	6 stations
07	7 stations
08	8 stations
09	9 stations
10	10 stations

Symbol	Oil-free	Special thread
Nil	—	Rc
A	—	G*1
B	—	NPT
D	○	G*1
E	○	NPT
Z	○	Rc

*1 For connection, prepare a fitting compliant with ISO 16030 and JIS B 8674.

Blanking Plate Assembly Part No.

For size 1 **VVX021S-4A-N**

For size 2 **VVX022S-4A-N**

For size 3 **VVX023S-4A-N**

When mounting a blanking plate assembly, if the solenoid valve for the manifold is ozone resistant, (Seal material: FKM), please select FKM.

Seal material

N	NBR
F	FKM

Dimensions → Page 63

How to Order Manifold Assembly (Example)

Enter the valve and blanking plate to be mounted under the manifold base part number.

<Example>

VVX210B05.....1
***VX2A0AA 4**
***VVX021S-4A-N 1**

"*" is the symbol for mounting.
Add an "*" in front of the part numbers for solenoid valves etc. to be mounted.

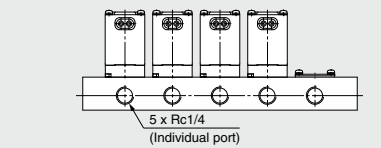

Enter the product's part number in order, counting the 1st station from the D side (left in the manifold arrangement, when viewing the individual port in front).

For Medium Vacuum (0.1 Pa·abs or more) Single Unit

∗ This valve can also be used with air.
(Refer to the valve specifications for air.)

Model/Valve Specifications

Symbol (Application example)

N.C.

① **Used with vacuum** ② **Used with pressure**

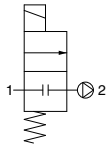

When the valve is closed, flow is blocked from port 1 to port 2. However, if the pressure in port 2 is higher than port 1, the valve will not be able to block the fluid and it will flow from port 2 to port 1.

Symbol (Application example)

N.O.

① **Used with vacuum** ② **Used with pressure**

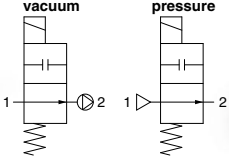

When the valve is closed, flow is blocked from port 1 to port 2. However, if the pressure in port 2 is higher than port 1, the valve will not be able to block the fluid and it will flow from port 2 to port 1.

Normally Closed (N.C.)

Size	Port size	Orifice diameter (mmø) Note 1)	Model	Flow rate characteristics Note 2)			Operating pressure range		Max. system pressure (MPa)	Weight Note 3) (g)
				C [dm³/(s·bar)]	b	Cv	① Used with vacuum (Pa·abs)	② Used with pressure (MPa·G)		
1	1/8, 1/4	2	VX214	0.63	0.63	0.23	0.1 to atmospheric pressure	0 to 1.0	1.0	300
		3		1.05	0.68	0.41		0 to 0.6		300
		5		2.20	0.39	0.62		0 to 0.2		300
2	1/4, 3/8	4	VX224	1.90	0.52	0.62		0 to 1.0		460
		7		3.99	0.44	1.08		0 to 0.15		460
3	1/4, 3/8	5	VX234	1.96	0.55	0.75		0 to 1.0		580
		8		5.67	0.33	1.58		0 to 0.3		580
		10		5.74	0.64	2.21		0 to 0.1		580
	1/2	10		8.42	0.39	2.21		0 to 0.1		630

Normally Open (N.O.)

Size	Port size	Orifice diameter (mmø) Note 1)	Model	Flow rate characteristics Note 2)			Operating pressure range		Max. system pressure (MPa)	Weight Note 3) (g)
				C [dm³/(s·bar)]	b	Cv	① Used with vacuum (Pa·abs)	② Used with pressure (MPa·G)		
1	1/8, 1/4	2	VX244	0.63	0.63	0.23	0.1 to atmospheric pressure	0 to 0.9	1.0	320
		3		1.05	0.68	0.41		0 to 0.45		320
		5		2.20	0.39	0.62		0 to 0.2		320
2	1/4, 3/8	4	VX254	1.90	0.52	0.62		0 to 0.8		490
		7		3.99	0.44	1.08		0 to 0.15		490
3	1/4, 3/8	5	VX264	1.96	0.55	0.75		0 to 0.8		620
		8		5.67	0.33	1.58		0 to 0.3		620

Note 1) The orifice size is just as a reference guide. Check the flow rate characteristics (conversion Cv).
Note 2) The flow rate characteristics of this product have variations.
When the highly precise flow control is required according to the system to be used, select an orifice diameter 1.3 times larger than that shown above and install a restrictor on the downstream side of the solenoid valve to make the adjustment.
Note 3) Weight of grommet type. Add 10 g for conduit type, 30 g for DIN terminal type, 60 g for conduit terminal type respectively.

Fluid and Ambient Temperature

Fluid temperature (°C)	Ambient temperature (°C)
1 to 60 Note)	–20 to 60

Note) With no freezing

Valve Leakage Rate

Internal Leakage

Seal material	Leakage rate Note)
FKM	10^{-6} Pa·m³/sec or less

External Leakage

Seal material	Leakage rate Note)
FKM	10^{-6} Pa·m³/sec or less

Note) Leakage (10^{-6} Pa·m³/sec) is the value at differential pressure 0.1 MPa and ambient temperature 20°C.

How to Order (Single Unit)

Note) Refer to the table on page 53-1 for UL-compliant products.

RoHS

VX2 1 4 A A

Fluid

4	Medium vacuum

Common Specifications

Seal material	FKM
Coil insulation type	Class B
Thread type	Rc
Oil-free	
Non-leak	

Coil size/Valve type

Size	Symbol	Valve type
Size 1	1	N.C.
	4	N.O.
Size 2	2	N.C.
	5	N.O.
Size 3	3	N.C.
	6	N.O.

Body material/Port size/Orifice diameter

Symbol	Body material	Port size	Orifice diameter
A	C37	1/8	2
B			3
C			5
D		1/4	2
E			3
F			5
H	Stainless steel	1/8	2
J			3
K			5
L		1/4	2
M			3
N			5
A	C37	1/4	4
B			7
D		3/8	4
E			7
H	Stainless steel	1/4	4
J			7
L		3/8	4
M			7
A	C37	1/4	5
B			8
C			10 (N.C. only)
D		3/8	5
E			8
F			10 (N.C. only)
G		1/2	10 (N.C. only)
H	Stainless steel	1/4	5
J			8
K			10 (N.C. only)
L		3/8	5
M			8
N			10 (N.C. only)
P		1/2	10 (N.C. only)

Voltage/Electrical entry

Symbol	Voltage	Electrical entry
A	24 VDC	Grommet
B	100 VAC	Grommet (With surge voltage suppressor)
C	110 VAC	
D	200 VAC	
E	230 VAC	
F	24 VDC	
G	24 VDC	DIN terminal (With surge voltage suppressor)
H	100 VAC	
J	110 VAC	
K	200 VAC	
L	230 VAC	
M	24 VDC	Conduit terminal (With surge voltage suppressor)
N	100 VAC	
P	110 VAC	
Q	200 VAC	
R	230 VAC	
S	24 VDC	Conduit (With surge voltage suppressor)
T	100 VAC	
U	110 VAC	
V	200 VAC	
W	230 VAC	
Y	24 VDC	Flat terminal
Z	Other voltages	

For special options, refer to pages 49 to 51.

Special voltage	24 VAC
	48 VAC
	220 VAC
	240 VAC
	12 VDC
DIN terminal with light	
Conduit terminal with light	

Without DIN connector
Seal material: EPDM
G thread
NPT thread
With bracket
Mounting holes on the bottom side of the body
Special electrical entry direction

Dimensions→ Pages 60, 61 (Single unit)

For Medium Vacuum (0.1 Pa·abs or more) Manifold

Model/Valve Specifications

N.C.

Symbol

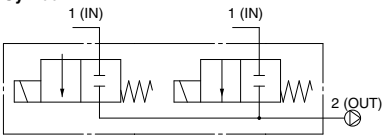

Individual SUP type

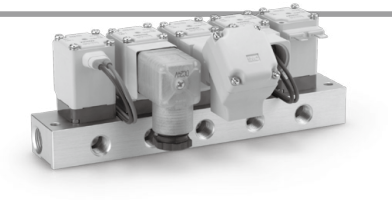

N.O.

Symbol

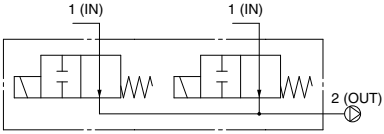

Individual SUP type

When the valve is closed, flow is blocked from port 1 to port 2.
However, if the pressure in port 2 is higher than port 1,
the valve will not be able to block the fluid and it will flow from port 2 to port 1.

Normally Closed (N.C.)

Size	Orifice diameter (mmø) Note 1)	Model	Flow rate characteristics Note 2)			Maximum operating pressure differential (MPa) Note 3)	Max. system pressure (MPa) Note 3)
			C [dm³/(s·bar)]	b	Cv		
1	2	VX2A4	0.63	0.63	0.23	1.0	1.0
	3		1.05	0.68	0.41	0.6	
	5		2.20	0.39	0.62	0.2	
2	4	VX2B4	1.90	0.52	0.62	1.0	
	7		3.99	0.44	1.08	0.15	
3	5	VX2C4	1.96	0.55	0.75	1.0	
	7		3.99	0.44	1.08	0.3	

Normally Open (N.O.)

Size	Orifice diameter (mmø) Note 1)	Model	Flow rate characteristics Note 2)			Maximum operating pressure differential (MPa) Note 3)	Max. system pressure (MPa) Note 3)
			C [dm³/(s·bar)]	b	Cv		
1	2	VX2D4	0.63	0.63	0.23	0.9	1.0
	3		1.05	0.68	0.41	0.45	
	5		2.20	0.39	0.62	0.2	
2	4	VX2E4	1.90	0.52	0.62	0.8	
	7		3.99	0.44	1.08	0.15	
3	5	VX2F4	1.96	0.55	0.75	0.8	
	7		3.99	0.44	1.08	0.3	

Note 1) The orifice size is just as a reference guide. Check the flow rate characteristics (conversion Cv).
Note 2) The flow rate characteristics of this product have variations.
When the highly precise flow control is required according to the system to be used, select an orifice diameter 1.3 times larger than that shown above and install a restrictor on the downstream side of the solenoid valve to make the adjustment.
Note 3) Refer to "Glossary of Terms" on page 65 for details on the maximum operating pressure differential and the maximum system pressure.

Fluid and Ambient Temperature

Fluid temperature (°C)	Ambient temperature (°C)
1 to 60 Note)	–20 to 60

Note) With no freezing

Valve Leakage Rate

Internal Leakage

Seal material	Leakage rate Note)
FKM	10^{-6} Pa·m³/sec or less

External Leakage

Seal material	Leakage rate Note)
FKM	10^{-6} Pa·m³/sec or less

Note) Leakage (10^{-6} Pa·m³/sec) is the value at 0.1 Pa·abs and ambient temperature 20°C.

How to Order (Solenoid Valve for Manifold)

VX2 A 4 A A

Fluid

4	Medium vacuum

Common Specifications

Seal material	FKM
Coil insulation type	Class B
Oil-free	
Non-leak	

Coil size/Valve type

Size	Symbol	Valve type
Size 1	A	N.C.
	D	N.O.
Size 2	B	N.C.
	E	N.O.
Size 3	C	N.C.
	F	N.O.

Body material/Orifice diameter

Symbol	Body material	Orifice diameter
A	Resin	2
B		3
C		5
A	Resin	4
B		7
A	Resin	5
B		7

Voltage/Electrical entry

Symbol	Voltage	Electrical entry
A	24 VDC	Grommet
B	100 VAC	Grommet (With surge voltage suppressor)
C	110 VAC	
D	200 VAC	
E	230 VAC	
F	24 VDC	
G	24 VDC	DIN terminal (With surge voltage suppressor)
H	100 VAC	
J	110 VAC	
K	200 VAC	
L	230 VAC	
M	24 VDC	Conduit terminal (With surge voltage suppressor)
N	100 VAC	
P	110 VAC	
Q	200 VAC	
R	230 VAC	
S	24 VDC	Conduit (With surge voltage suppressor)
T	100 VAC	
U	110 VAC	
V	200 VAC	
W	230 VAC	
Y	24 VDC	Flat terminal
Z	Other voltages	

For special options, refer to pages 49 to 51.

Special voltage	24 VAC
	48 VAC
	220 VAC
	240 VAC
	12 VDC
DIN terminal with light	
Conduit terminal with light	
Without DIN connector	
Seal material: EPDM	
Special electrical entry direction	

⚠Caution
Mounting orientation exists when mounting valves onto manifold base. Refer to page 76 for details.

Manifold Base/How to Order

VVX2 1 4 A 02 ☐

Fluid

4	Medium vacuum

Coil size

Size	Symbol
Size 1	1
Size 2	2
Size 3	3

Common port size: 3/8 (OUT port)

Base material/Port size/Base type

Symbol	Base material	Individual port size	Base type
A	Aluminum	1/8	Individual SUP
B		1/4	

Stations

Symbol	Stations
02	2 stations
03	3 stations
04	4 stations
05	5 stations
06	6 stations
07	7 stations
08	8 stations
09	9 stations
10	10 stations

Symbol	Special thread
Nil	Rc
A	G*1
B	NPT

*1 For connection, prepare a fitting compliant with ISO 16030 and JIS B 8674.

Blanking Plate Assembly Part No.

For size 1 **VVX021S-4A-F**
For size 2 **VVX022S-4A-F**
For size 3 **VVX023S-4A-F**

Dimensions→Page 63

How to Order Manifold Assembly (Example)

Enter the valve and blanking plate to be mounted under the manifold base part number.

<Example>

VVX214B05.....1
***VX2A4AA 4**
***VVX021S-4A-F 1**
"*" is the symbol for mounting.
Add an "*" in front of the part numbers for solenoid valves etc. to be mounted.

D side — Stations 1 2 3 4 5 — U side

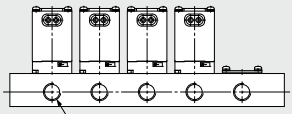

5 x Rc1/4
(Individual port)

Enter the product's part number in order, counting the 1st station from the D side (left in the manifold arrangement, when viewing the individual port in front).

For Water Single Unit

∗ This valve can also be used with air.
(Refer to the valve specifications for air.)

⚠ When water is used as the fluid

Use clear water equivalent to tap water. (When using underground water, if the water is to be treated, be sure to check the disinfectant or corrosion treatment's compatibility with the product before use.) Corrosive fluids or seawater cannot be used.

Model/Valve Specifications

Symbol

N.C.

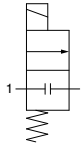

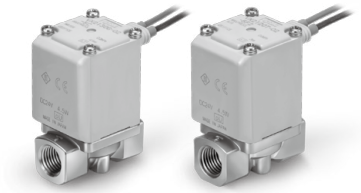

When the valve is closed, flow is blocked from port 1 to port 2. However, if the pressure in port 2 is higher than port 1, the valve will not be able to block the fluid and it will flow from port 2 to port 1.

Symbol

N.O.

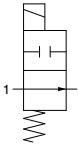

When the valve is closed, flow is blocked from port 1 to port 2. However, if the pressure in port 2 is higher than port 1, the valve will not be able to block the fluid and it will flow from port 2 to port 1.

Normally Closed (N.C.)

Size	Port size	Orifice diameter (mmø) Note 1)	Model	Flow rate characteristics Note 2)		Maximum operating pressure differential (MPa) Note 4)	Max. system pressure (MPa) Note 4)	Weight Note 3) (g)
				Kv	Conversion Cv			
1	1/8, 1/4	2	VX212	0.20	0.23	1	1.0	300
		3		0.36	0.42	0.6		300
		5		0.54	0.63	0.2		300
2	1/4, 3/8	4	VX222	0.54	0.63	1		460
		7		0.93	1.08	0.15		460
3	1/4, 3/8	5	VX232	0.64	0.75	1		580
		8		1.36	1.58	0.3		580
		10		1.89	2.21	0.1		580
	1/2	10		1.89	2.21	0.1		630

Normally Open (N.O.)

Size	Port size	Orifice diameter (mmø) Note 1)	Model	Flow rate characteristics Note 2)		Maximum operating pressure differential (MPa) Note 4)	Max. system pressure (MPa) Note 4)	Weight Note 3) (g)
				Kv	Conversion Cv			
1	1/8, 1/4	2	VX242	0.20	0.23	0.9	1.0	320
		3		0.36	0.42	0.45		320
		5		0.54	0.63	0.2		320
2	1/4, 3/8	4	VX252	0.54	0.63	0.8		490
		7		0.93	1.08	0.15		490
3	1/4, 3/8	5	VX262	0.64	0.75	0.8		620
		8		1.36	1.58	0.3		620

Note 1) The orifice size is just as a reference guide. Check the flow rate characteristics (conversion Cv).
Note 2) The flow rate characteristics of this product have variations.
When the highly precise flow control is required according to the system to be used, select an orifice diameter 1.3 times larger than that shown above and install a restrictor on the downstream side of the solenoid valve to make the adjustment.
Note 3) Weight of grommet type. Add 10 g for conduit type, 30 g for DIN terminal type, 60 g for conduit terminal type respectively.
Note 4) Refer to "Glossary of Terms" on page 65 for details on the maximum operating pressure differential and the maximum system pressure.

Fluid and Ambient Temperature

Fluid temperature (°C)	Ambient temperature (°C)
1 to 60 Note)	–20 to 60

Note) With no freezing

Valve Leakage Rate

Internal Leakage

Seal material Note 2)	Leakage rate (Water) Note 1)
NBR (FKM)	0.1 cm^3/min or less

External Leakage

Seal material Note 2)	Leakage rate (Water) Note 1)
NBR (FKM)	0.1 cm^3/min or less

Note 1) Leakage is the value at ambient temperature 20°C.
Note 2) For seal material/FKM, refer to "Other Options" on page 49 for the selection.

How to Order (Single Unit)

Note) Refer to the table on page 53 for UL-compliant.

VX2 1 2 A A

Fluid

2	Water

Common Specifications

Seal material	NBR
Coil insulation type	Class B
Thread type	Rc

Coil size/Valve type

Size	Symbol	Valve type
Size 1	1	N.C.
	4	N.O.
Size 2	2	N.C.
	5	N.O.
Size 3	3	N.C.
	6	N.O.

Body material/Port size/Orifice diameter

Symbol	Body material	Port size	Orifice diameter
A	C37	1/8	2
B			3
C			5
D		1/4	2
E			3
F			5
H	Stainless steel	1/8	2
J			3
K			5
L		1/4	2
M			3
N			5
A	C37	1/4	4
B			7
D		3/8	4
E			7
H	Stainless steel	1/4	4
J			7
L		3/8	4
M			7
A	C37	1/4	5
B			8
C			10 (N.C. only)
D		3/8	5
E			8
F			10 (N.C. only)
G		1/2	10 (N.C. only)
H	Stainless steel	1/4	5
J			8
K			10 (N.C. only)
L		3/8	5
M			8
N			10 (N.C. only)
P		1/2	10 (N.C. only)

Voltage/Electrical entry

Symbol	Voltage	Electrical entry
A	24 VDC	Grommet
B	100 VAC	Grommet (With surge voltage suppressor)
C	110 VAC	
D	200 VAC	
E	230 VAC	
F	24 VDC	
G	24 VDC	DIN terminal (With surge voltage suppressor)
H	100 VAC	
J	110 VAC	
K	200 VAC	
L	230 VAC	
M	24 VDC	Conduit terminal (With surge voltage suppressor)
N	100 VAC	
P	110 VAC	
Q	200 VAC	
R	230 VAC	
S	24 VDC	Conduit (With surge voltage suppressor)
T	100 VAC	
U	110 VAC	
V	200 VAC	
W	230 VAC	
Y	24 VDC	Flat terminal
Z	Other voltages	

For special options, refer to pages 49 to 51.

Special voltage	24 VAC	Applicable to deionized water (Seal material: FKM)
	48 VAC	Seal material: EPDM
	220 VAC	Oil-free
	240 VAC	G thread
	12 VDC	NPT thread
DIN terminal with light		With bracket
Conduit terminal with light		Mounting holes on the bottom side of the body
Without DIN connector		Special electrical entry direction

Dimensions → Pages 60, 61 (Single unit)

For Oil Single Unit

∗ This valve can also be used with air or water.
(Refer to the valve specifications for air or water.)

⚠When the fluid is oil.

The kinematic viscosity must not exceed 50 mm²/s.
The special construction of the armature adopted in the built-in full-wave rectifier type gives an improvement in OFF response by providing clearance on the absorbed surface when it is switched ON.

Model/Valve Specifications

Symbol

N.C.

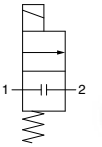

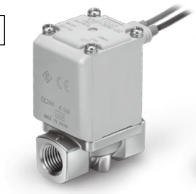

When the valve is closed, flow is blocked from port 1 to port 2. However, if the pressure in port 2 is higher than port 1, the valve will not be able to block the fluid and it will flow from port 2 to port 1.

Symbol

N.O.

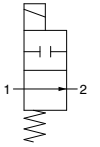

When the valve is closed, flow is blocked from port 1 to port 2. However, if the pressure in port 2 is higher than port 1, the valve will not be able to block the fluid and it will flow from port 2 to port 1.

Normally Closed (N.C.)

Size	Port size	Orifice diameter (mmø) Note 1)	Model	Flow rate characteristics Note 2)		Maximum operating pressure differential (MPa) Note 4)	Max. system pressure (MPa) Note 4)	Weight Note 3) (g)
				Kv	Conversion Cv			
1	1/8, 1/4	2	VX213	0.20	0.23	1	1.0	300
		3		0.36	0.42	0.6		300
		5		0.54	0.63	0.2		300
2	1/4, 3/8	4	VX223	0.54	0.63	1		460
		7		0.93	1.08	0.15		460
3	1/4, 3/8	5	VX233	0.64	0.75	1		580
		8		1.36	1.58	0.3		580
		10		1.89	2.21	0.1		580
	1/2	10		1.89	2.21	0.1		630

Normally Open (N.O.)

Size	Port size	Orifice diameter (mmø) Note 1)	Model	Flow rate characteristics Note 2)		Maximum operating pressure differential (MPa) Note 4)	Max. system pressure (MPa) Note 4)	Weight Note 3) (g)
				Kv	Conversion Cv			
1	1/8, 1/4	2	VX243	0.20	0.23	0.9	1.0	320
		3		0.36	0.42	0.45		320
		5		0.54	0.63	0.2		320
2	1/4, 3/8	4	VX253	0.54	0.63	0.8		490
		7		0.93	1.08	0.15		490
3	1/4, 3/8	5	VX263	0.64	0.75	0.8		620
		8		1.36	1.58	0.3		620

Note 1) The orifice size is just as a reference guide. Check the flow rate characteristics (conversion Cv).
Note 2) The flow rate characteristics of this product have variations.
When the highly precise flow control is required according to the system to be used, select an orifice diameter 1.3 times larger than that shown above and install a restrictor on the downstream side of the solenoid valve to make the adjustment.
Note 3) Weight of grommet type. Add 10 g for conduit type, 30 g for DIN terminal type, 60 g for conduit terminal type respectively.
Note 4) Refer to “Glossary of Terms” on page 65 for details on the maximum operating pressure differential and the maximum system pressure.

Fluid and Ambient Temperature

Fluid temperature (°C)	Ambient temperature (°C)
–5 Note) to 60	–20 to 60

Note) Kinematic viscosity: 50 mm²/s or less

Valve Leakage Rate

Internal Leakage

Seal material	Leakage rate (Oil) Note)
FKM	0.1 cm³/min or less

External Leakage

Seal material	Leakage rate (Oil) Note)
FKM	0.1 cm³/min or less

Note) Leakage is the value at ambient temperature 20°C.

How to Order

Note) Refer to the table on page 53-2 for UL-compliant products.

RoHS

VX2 1 3 A A

Fluid

3	Oil

Common Specifications

Seal material	FKM
Coil insulation type	Class B
Thread type	Rc

Coil size/Valve type

Size	Symbol	Valve type
Size 1	1	N.C.
	4	N.O.
Size 2	2	N.C.
	5	N.O.
Size 3	3	N.C.
	6	N.O.

Body material/Port size/Orifice diameter

Symbol	Body material	Port size	Orifice diameter
A	C37	1/8	2
B			3
C			5
D		1/4	2
E			3
F			5
H	Stainless steel	1/8	2
J			3
K			5
L		1/4	2
M			3
N			5
A	C37	1/4	4
B			7
D		3/8	4
E			7
H	Stainless steel	1/4	4
J			7
L		3/8	4
M			7
A	C37	1/4	5
B			8
C			10 (N.C. only)
D		3/8	5
E			8
F			10 (N.C. only)
G		1/2	10 (N.C. only)
H	Stainless steel	1/4	5
J			8
K			10 (N.C. only)
L		3/8	5
M			8
N			10 (N.C. only)
P		1/2	10 (N.C. only)

Voltage/Electrical entry

Symbol	Voltage	Electrical entry
A	24 VDC	Grommet 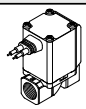
B	100 VAC	Grommet (With surge voltage suppressor) 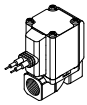
C	110 VAC	
D	200 VAC	
E	230 VAC	
F	24 VDC	
G	24 VDC	DIN terminal (With surge voltage suppressor) 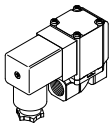
H	100 VAC	
J	110 VAC	
K	200 VAC	
L	230 VAC	
M	24 VDC	Conduit terminal (With surge voltage suppressor) 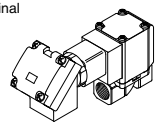
N	100 VAC	
P	110 VAC	
Q	200 VAC	
R	230 VAC	
S	24 VDC	Conduit (With surge voltage suppressor) 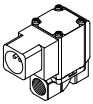
T	100 VAC	
U	110 VAC	
V	200 VAC	
W	230 VAC	
Y	24 VDC	Flat terminal 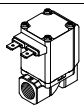
Z	Other voltages	

For special options, refer to pages 49 to 51.

Special voltage	24 VAC
	48 VAC
	220 VAC
	240 VAC
	12 VDC
DIN terminal with light	
Conduit terminal with light	

Without DIN connector
Oil-free
G thread
NPT thread
With bracket
Mounting holes on the bottom side of the body
Special electrical entry direction

Dimensions → Pages 60, 61 (Single unit)

For Steam Single Unit

∗ This valve can also be used with air, water, oil or heated water.
(Refer to the valve specifications for air, water or oil.)

Model/Valve Specifications

Symbol

N.C.

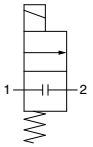

Symbol

N.O.

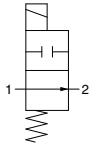

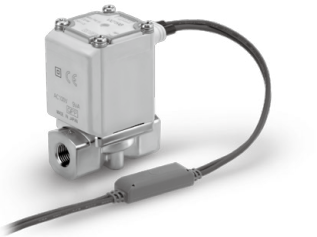

When the valve is closed, flow is blocked from port 1 to port 2.
However, if the pressure in port 2 is higher than port 1,
the valve will not be able to block the fluid and it will flow from port 2 to port 1.

Normally Closed (N.C.)

Size	Port size	Orifice diameter (mmø) Note 1)	Model	Flow rate characteristics Note 2)		Maximum operating pressure differential (MPa) Note 4)	Max. system pressure (MPa) Note 4)	Weight Note 3) (g)
				Kv	Conversion Cv			
1	1/8, 1/4	2	VX215	0.20	0.23	1	1.0	300
		3		0.36	0.42	0.6		300
		5		0.54	0.63	0.2		300
2	1/4, 3/8	4	VX225	0.54	0.63	1		460
		7		0.93	1.08	0.15		460
3	1/4, 3/8	5	VX235	0.64	0.75	1		580
		8		1.36	1.58	0.3		580
		10		1.89	2.21	0.1		580
	1/2	10		1.89	2.21	0.1		630

Normally Open (N.O.)

Size	Port size	Orifice diameter (mmø) Note 1)	Model	Flow rate characteristics Note 2)		Maximum operating pressure differential (MPa) Note 4)	Max. system pressure (MPa) Note 4)	Weight Note 3) (g)
				Kv	Conversion Cv			
1	1/8, 1/4	2	VX245	0.20	0.23	0.9	1.0	320
		3		0.36	0.42	0.45		320
		5		0.54	0.63	0.2		320
2	1/4, 3/8	4	VX255	0.54	0.63	0.8		490
		7		0.93	1.08	0.15		490
3	1/4, 3/8	5	VX265	0.64	0.75	0.8		620
		8		1.36	1.58	0.3		620

Note 1) The orifice size is just as a reference guide. Check the flow rate characteristics (conversion Cv).
Note 2) The flow rate characteristics of this product have variations.
When the highly precise flow control is required according to the system to be used, select an orifice diameter 1.3 times larger than that shown above and install a restrictor on the downstream side of the solenoid valve to make the adjustment.
Note 3) Weight of grommet type. Add 10 g for conduit type, 60 g for conduit terminal type respectively.
Note 4) Refer to “Glossary of Terms” on page 65 for details on the maximum operating pressure differential and the maximum system pressure.

Fluid and Ambient Temperature

Fluid temperature (°C)	Ambient temperature (°C)
Steam: 183 or less	–20 to 60
Heated water: 99 or less	

Valve Leakage Rate

Internal Leakage

Fluid	Seal material	Leakage rate
Steam	FKM for high temperature	1.0 cm^3/min or less
Heated water		0.1 cm^3/min or less

External Leakage

Fluid	Seal material	Leakage rate
Steam	FKM for high temperature	1.0 cm^3/min or less
Heated water		0.1 cm^3/min or less

How to Order (Single Unit)

VX2 1 5 A B

Fluid

5	Steam

∗ Can be used with heated water.

Coil size/Valve type

Size	Symbol	Valve type
Size 1	1	N.C.
	4	N.O.
Size 2	2	N.C.
	5	N.O.
Size 3	3	N.C.
	6	N.O.

Body material/Port size/Orifice diameter

Symbol	Body material	Port size	Orifice diameter
A	C37	1/8	2
B			3
C			5
D		1/4	2
E			3
F			5
H	Stainless steel	1/8	2
J			3
K			5
L		1/4	2
M			3
N			5
A	C37	1/4	4
B			7
D		3/8	4
E			7
H	Stainless steel	1/4	4
J			7
L		3/8	4
M			7
A	C37	1/4	5
B			8
C			10 (Only N.C.)
D		3/8	5
E			8
F			10 (Only N.C.)
G		1/2	10 (Only N.C.)
H	Stainless steel	1/4	5
J			8
K			10 (Only N.C.)
L		3/8	5
M			8
N			10 (Only N.C.)
P		1/2	10 (Only N.C.)

Common Specifications

Seal material	FKM for high temperature
Coil insulation type	Class H
Thread type	Rc

Voltage/Electrical entry

Symbol	Voltage	Electrical entry
A	24 VDC	Grommet
B	100 VAC	Grommet (With surge voltage suppressor)
C	110 VAC	
D	200 VAC	
E	230 VAC	
G	24 VDC	DIN terminal (With surge voltage suppressor Note))
H	100 VAC	
J	110 VAC	
K	200 VAC	
L	230 VAC	
N	100 VAC	Conduit terminal (With surge voltage suppressor)
P	110 VAC	
Q	200 VAC	
R	230 VAC	
T	100 VAC	Conduit (With surge voltage suppressor)
U	110 VAC	
V	200 VAC	
W	230 VAC	
Z	Other voltages	

Note) For the class H type DIN terminal, use it in combination with the connector provided.

For special options, refer to pages 49 to 51.

Special voltage	24 VAC
	48 VAC
	220 VAC
	240 VAC
DIN terminal with light	
Conduit terminal with light	
Seal material: EPDM (99°C or less)	
Oil-free	
G thread	
NPT thread	
With bracket	
Mounting holes on the bottom side of the body	
Special electrical entry direction	

Dimensions → Page 62 (Single unit)

Special Options

Electrical Options
(Special voltage, With light, Without DIN connector)

VX2 1 0 A Z 1A

Enter standard product number.

Electrical option

Electrical specification/Voltage/Electrical entry

Specification	Symbol	Class H*	Voltage	Electrical entry
Special voltage	1A	●	48 VAC	Grommet (With surge voltage suppressor)
	1B	●	220 VAC	
	1C	●	240 VAC	
	1U	●	24 VAC	
	1D	—	12 VDC	Grommet
	1E	—	12 VDC	Grommet (With surge voltage suppressor)
	1F	●	48 VAC	DIN terminal (With surge voltage suppressor)
	1G	●	220 VAC	
	1H	●	240 VAC	
	1V	●	24 VAC	
	1J	—	12 VDC	
	1K	●	48 VAC	Conduit terminal (With surge voltage suppressor)
	1L	●	220 VAC	
	1M	●	240 VAC	
	1W	●	24 VAC	
	1N	—	12 VDC	
	1P	●	48 VAC	Conduit (With surge voltage suppressor)
	1Q	●	220 VAC	
	1R	●	240 VAC	
	1Y	●	24 VAC	
	1S	—	12 VDC	
	1T	—	12 VDC	Flat terminal
With light	2A	●	24 VDC	DIN terminal (With surge voltage suppressor)
	2B	●	100 VAC	
	2C	●	110 VAC	
	2D	●	200 VAC	
	2E	●	230 VAC	
	2F	●	48 VAC	
	2G	●	220 VAC	
	2H	●	240 VAC	
	2V	●	24 VAC	
	2J	—	12 VDC	
	2K	—	24 VDC	Conduit terminal (With surge voltage suppressor)
	2L	●	100 VAC	
	2M	●	110 VAC	
	2N	●	200 VAC	
	2P	●	230 VAC	
	2Q	●	48 VAC	
	2R	●	220 VAC	
	2S	●	240 VAC	
	2W	●	24 VAC	
	2T	—	12 VDC	
Without DIN connector	3A	—	24 VDC	DIN terminal (With surge voltage suppressor)
	3B	—	100 VAC	
	3C	—	110 VAC	
	3D	—	200 VAC	
	3E	—	230 VAC	
	3F	—	48 VAC	
	3G	—	220 VAC	
	3H	—	240 VAC	
	3V	—	24 VAC	
	3J	—	12 VDC	

∗ Options marked with ● are available for Class "H" coil.
Applicable for all when the coil insulation class is Class "B".

∗ Enter symbols in the order below when ordering a combination of electrical option, other option, etc.

Example) **VX2 1 2 A Z 1A Z**

Electrical option **Other option**

Other Options

Low concentration ozone resistant and applicable to deionized water

Oil-free

Port thread

VX2 1 0 A A Z

Enter standard product number.

Other option

Low concentration ozone resistant and applicable to deionized water/Oil-free/Port thread

Symbol	Low concentration ozone resistant and applicable to deionized water*1, *2 (Seal material: FKM)	Oil-free	Port thread
Nil	—	—	Rc, One-touch fitting*2
A	—	—	G*4
B			NPT
C	○	—	Rc, One-touch fitting*2
D	—	○	G*4
E			NPT
F	○	—	G*4
G			NPT
H	○	○	Rc, One-touch fitting*2
K			G*4
L			NPT
Z	—	○	Rc, One-touch fitting*2

∗1 Applicable to air (VX2□0) and water (VX2□2).
∗2 When the body is resin, One-touch fittings are equipped.
∗3 When using deionized water or any other fluid that may corrode C37 (brass), select a stainless steel body.
∗4 For connection, prepare a fitting compliant with ISO 16030 and JIS B 8674.

Made to Order

<Special lead wire length>

Produced upon receipt of order.

VX2 □ □ □ □ XL □

Lead wire length

XL1	600 mm
XL2	1000 mm
XL3	1500 mm
XL4	3000 mm

<High pressure>

VX2 □ □ □ □ XH □

Correspondence table

Size		Symbol	Body material	Port size	Orifice dia.	Max. operating pressure differential
1	N.C.	Q	C37	1/8	2	2 MPa
		R		1/4		
		S	Stainless steel	1/8		
		T		1/4		
	N.O.	—	—	Not available		
2	N.C.	Q	C37	1/4	3	2 MPa
		R		3/8		
		—	Stainless steel	Not available		
	N.O.	—	—	Not available		
3	N.C.	Q	C37	1/4	3	3 MPa
		R		3/8		
		—	Stainless steel	Not available		
	N.O.	—	—	Not available		

∗ The aluminum and PBT bodies are not available.

Option

Symbol	Specifications: Electrical entry direction	Specifications: Bracket
Nil	In side (Standard)	None
A	90°	
B	180°	
C	270°	
D	In side (Standard)	With bracket
E	90°	
F	180°	
G	270°	
H	In side (Standard)	Mounting holes on the bottom side of the body
J	90°	
K	180°	
L	270°	

Installation Options
(Mounting Option/Special Electrical Entry Direction)

The following shows combinations that can be selected using installation options.

Combinations

Symbol	Special electrical entry direction	With bracket	Mounting holes on the bottom side of the body	Seal material: EPDM
XC□	●			●
XB□	●	●		●
XNB□	●	●	●	●
X332□	●	●	●	●

Special Electrical Entry Direction

VX2□□□□XC A

Enter standard product number.

Special electrical entry direction

Symbol	Electrical entry direction: Single unit	Electrical entry direction: Manifold
A	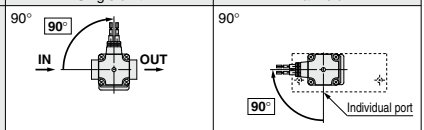	
B		
C		

∗ Enter symbols in the order below when ordering a combination of electrical option, other option and special electrical entry direction.

Example) **VX2 1 2 A Z 1A Z XC A**

Electrical option — **Other option** — **Special electrical entry direction**

With Bracket/ Special Electrical Entry Direction

VX2□□□□XB A

Enter standard product number.

With bracket/Special electrical entry direction

Symbol	Electrical entry direction
Nil	Standard
A	90°
B	180°
C	270°

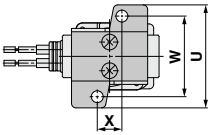

(mm)

Size	Port size	U	W	X
1	1/8, 1/4	46	36	11
2	1/4, 3/8	56	46	13
3	1/4, 3/8	56	46	13
	1/2	—	—	—

∗1 Bracket is attached as standard with the resin body, so there are no XB settings.
∗2 When the orifice is ø8, ø10, and the body port size is 1/4 or 3/8, use a foot type bracket. (The L-bracket of the old VX series is not compatible.) If the body port size is 1/2, there are no XB settings. (Refer to the following.)
∗3 On the bottom side of the standard body, there is no female thread for mounting a bracket. Please be careful because the bracket cannot be retrofit.
∗4 Bracket is packed in the same container as the main body.

Bracket Interchangeable with an Old Type

Size	Port size	Orifice diameter (mmø)	Bracket interchangeable with an old type
1	1/8, 1/4	2	● (Interchangeable)
		3	● (Interchangeable)
		5	● (Interchangeable)
2	1/4, 3/8	4	● (Interchangeable)
		7	● (Interchangeable)
3	1/4, 3/8	5	● (Interchangeable)
		8	× (Not interchangeable)∗2
		10	× (Not interchangeable)∗2
	1/2	10	— (Not available)∗2

∗ Enter symbols in the order below when ordering a combination of electrical option, other option and with bracket.

Example) **VX2 1 2 A Z 1A Z XB A**

Electrical option — **Other option** — **With bracket/Special electrical entry direction**

Installation Options
(Mounting Option/Special Electrical Entry Direction)

Mounting Holes on the Bottom Side of the Body/ Special Electrical Entry Direction

VX2 □□□□ XNB A

Enter standard product number.

Mounting holes on the bottom side of the body/ Special electrical entry direction

Symbol	Electrical entry direction	Symbol	Electrical entry direction
Nil	Standard 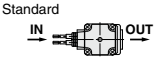	C	270° 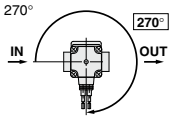
A	90° 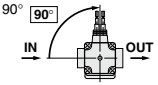		
B	180° 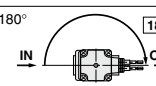		

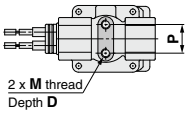

(mm)

Size	Port size	M	D	P
1	1/8, 1/4	M4	6	12.8
2	1/4, 3/8	M5	8	19
3	1/4, 3/8	M5	8	19
	1/2	M5	8	23

Note) Resin body is not available.

∗ Enter symbols in the order below when ordering a combination of electrical option, other option and mounting holes on the bottom side of the body.

Example) **VX2 1 2 A Z 1A Z XNB A**

- Electrical option
- Other option
- Mounting holes on the bottom side of the body/ Special electrical entry direction

Seal Material: EPDM/With Bracket/ Mounting Holes on the Bottom Side of the Body/ Special Electrical Entry Direction

VX2 □□□□ X332 A

Enter standard product number.

Seal material: EPDM

Fluid symbol

0	Air
2	Water
4	Medium vacuum
5	Heated water (99°C or less)

With bracket/Mounting holes on the bottom side of the body/ Special electrical entry direction

Symbol	Specifications	
	Electrical entry direction	Bracket
Nil	IN side (Standard)	None
A	90°	
B	180°	
C	270°	
D	IN side (Standard)	With bracket∗1, 2
E	90°	
F	180°	
G	270°	
H	IN side (Standard)	Mounting holes on the bottom side of the body∗1
J	90°	
K	180°	
L	270°	

∗1 Resin body is not available.
∗2 The model with bracket is not available for port size 1/2.
∗3 "Other Options", which can be combined, are A, B, D, E, Z.
∗4 Electrical entry direction

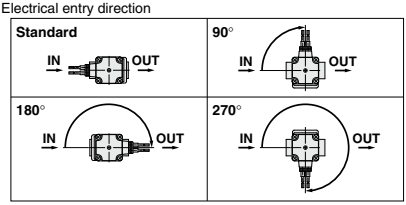

∗ Enter symbols in the order below when ordering a combination of electrical option, other option, seal material: EPDM, with bracket, mounting holes on the bottom side of the body and special electrical entry direction.

Example) **VX2 1 2 A Z 1A Z X332 A**

- Electrical option
- Other option
- Seal material: EPDM/ With bracket/Mounting holes on the bottom side of the body/ Special electrical entry direction

VX21/22/23 Series
UL-compliant

∗ Refer to the table shown below for UL-compliant.

Note) Products indicated will be shipped with a UL label.

For Air

VX210 Valve type: N.C.

Size, Valve type, Fluid	Body material, Port size	Voltage, Electrical entry, Electrical options	Other options	With Note) bracket
VX210	A	A	Nil	Nil
	B	B	A	XC∗
	C	C	B	XB∗
	D	D	C	XNB∗
	E	E	D	X332∗
	F	F	E	
	H Note)	M	F	
	J Note)	N	G	
	K Note)	P	H	
	L Note)	Q	K	
	M Note)	R	L	
	N Note)	S	Z	
		T		
		U		
		V		
		W		
		Y		
		Z1A		
		Z1B		
		Z1C		
		Z1U		
		Z1D		
		Z1E		
		Z1K		
		Z1L		
		Z1M		
		Z1W		
		Z1N		
		Z1P		
		Z1Q		
		Z1R		
		Z1Y		
		Z1S		
		Z1T		
		Z2K		
		Z2L		
		Z2M		
		Z2N		
		Z2P		
		Z2Q		
		Z2R		
		Z2S		
		Z2W		
		Z2T		
		Z3A		
		Z3B		
		Z3C		
		Z3D		
		Z3E		
		Z3F		
		Z3G		
		Z3H		
		Z3V		
		Z3J		

Note) Body material/Port size: Since the bracket is attached to H, J, K, L, M and N, "XB" cannot be selected.

VX220 Valve type: N.C.

Size, Valve type, Fluid	Body material, Port size	Voltage, Electrical entry, Electrical options	Other options	With Note) bracket
VX220	A	A	Nil	Nil
	B	B	A	XC∗
	C	C	B	XB∗
	D	D	C	XNB∗
	E	E	D	X332∗
	H Note)	F	E	
	J Note)	M	F	
	L Note)	N	G	
	M Note)	P	H	
		Q	K	
		R	L	
		S	Z	
		T		
		U		
		V		
		W		
		Y		
		Z1A		
		Z1B		
		Z1C		
		Z1U		
		Z1D		
		Z1E		
		Z1K		
		Z1L		
		Z1M		
		Z1W		
		Z1N		
		Z1P		
		Z1Q		
		Z1R		
		Z1Y		
		Z1S		
		Z1T		
		Z2K		
		Z2L		
		Z2M		
		Z2N		
		Z2P		
		Z2Q		
		Z2R		
		Z2S		
		Z2W		
		Z2T		
		Z3A		
		Z3B		
		Z3C		
		Z3D		
		Z3E		
		Z3F		
		Z3G		
		Z3H		
		Z3V		
		Z3J		

Note) Body material/Port size: Since the bracket is attached to H, J, L and M, "XB" cannot be selected.

VX230 Valve type: N.C.

Size, Valve type, Fluid	Body material, Port size	Voltage, Electrical entry, Electrical options	Other options	With Note) bracket
VX230	A	A	Nil	Nil
	B	B	A	XC∗
	C	C	B	XB∗
	D	D	C	XNB∗
	E	E	D	X332∗
	F	F	E	
	G Note 1)	M	F	
	H Note 2)	N	G	
	J Note 2)	P	H	
	K Note 2)	Q	K	
	L Note 2)	R	L	
	M Note 2)	S	Z	
	N Note 2)	T		
		U		
		V		
		W		
		Y		
		Z1A		
		Z1B		
		Z1C		
		Z1U		
		Z1D		
		Z1E		
		Z1K		
		Z1L		
		Z1M		
		Z1W		
		Z1N		
		Z1P		
		Z1Q		
		Z1R		
		Z1Y		
		Z1S		
		Z1T		
		Z2K		
		Z2L		
		Z2M		
		Z2N		
		Z2P		
		Z2Q		
		Z2R		
		Z2S		
		Z2W		
		Z2T		
		Z3A		
		Z3B		
		Z3C		
		Z3D		
		Z3E		
		Z3F		
		Z3G		
		Z3H		
		Z3V		
		Z3J		

Note 1) Body material/Port size: Since "with bracket" setting is not provided on G, "XB" cannot be selected.
Note 2) Body material/Port size: Since the bracket is attached to H, J, K, L, M and N, "XB" cannot be selected.

Refer to pages 49 to 51 for electrical options, other options, and bracket/electrical entry direction.

Note) Products indicated will be shipped with a UL label.

For Water

VX212 Valve type: N.C.

Size, Valve type, Fluid	Body material, Port size	Voltage, Electrical entry, Electrical options	Other options	With bracket
VX212	A	A	Nil	Nil
	B	B	A	XC*
	C	C	B	XB*
	D	D	C	XNB*
	E	E	D	X332*
	F	F	E	
	H	M	F	
	J	N	G	
	K	P	H	
	L	Q	K	
	M	R	L	
	N	S	Z	
		T		
		U		
		V		
		W		
		Y		
		Z1A		
		Z1B		
		Z1C		
		Z1U		
		Z1D		
		Z1E		
		Z1K		
		Z1L		
		Z1M		
		Z1W		
		Z1N		
		Z1P		
		Z1Q		
		Z1R		
		Z1Y		
		Z1S		
		Z1T		
		Z2K		
		Z2L		
		Z2M		
		Z2N		
		Z2P		
		Z2Q		
		Z2R		
		Z2S		
		Z2W		
		Z2T		
		Z3A		
		Z3B		
		Z3C		
		Z3D		
		Z3E		
		Z3F		
		Z3G		
		Z3H		
		Z3V		
		Z3J		

VX222 Valve type: N.C.

Size, Valve type, Fluid	Body material, Port size	Voltage, Electrical entry, Electrical options	Other options	With bracket
VX222	A	A	Nil	Nil
	B	B	A	XC*
	D	C	B	XB*
	E	D	C	XNB*
	H	E	D	X332*
	J	F	E	
	L	M	F	
	M	N	G	
		P	H	
		Q	K	
		R	L	
		S	Z	
		T		
		U		
		V		
		W		
		Y		
		Z1A		
		Z1B		
		Z1C		
		Z1U		
		Z1D		
		Z1E		
		Z1K		
		Z1L		
		Z1M		
		Z1W		
		Z1N		
		Z1P		
		Z1Q		
		Z1R		
		Z1Y		
		Z1S		
		Z1T		
		Z2K		
		Z2L		
		Z2M		
		Z2N		
		Z2P		
		Z2Q		
		Z2R		
		Z2S		
		Z2W		
		Z2T		
		Z3A		
		Z3B		
		Z3C		
		Z3D		
		Z3E		
		Z3F		
		Z3G		
		Z3H		
		Z3V		
		Z3J		

VX232 Valve type: N.C.

Size, Valve type, Fluid	Body material, Port size	Voltage, Electrical entry, Electrical options	Other options	With bracket
VX232	A	A	Nil	Nil
	B	B	A	XC*
	C	C	B	XB*
	D	D	C	XNB*
	E	E	D	X332*
	F	F	E	
	G Note)	M	F	
	H	N	G	
	J	P	H	
	K	Q	K	
	L	R	L	
	M	S	Z	
	N	T		
	P Note)	U		
		V		
		W		
		Y		
		Z1A		
		Z1B		
		Z1C		
		Z1U		
		Z1D		
		Z1E		
		Z1K		
		Z1L		
		Z1M		
		Z1W		
		Z1N		
		Z1P		
		Z1Q		
		Z1R		
		Z1Y		
		Z1S		
		Z1T		
		Z2K		
		Z2L		
		Z2M		
		Z2N		
		Z2P		
		Z2Q		
		Z2R		
		Z2S		
		Z2W		
		Z2T		
		Z3A		
		Z3B		
		Z3C		
		Z3D		
		Z3E		
		Z3F		
		Z3G		
		Z3H		
		Z3V		
		Z3J		

Note) Body material/ Port size: Since "with bracket" setting is not provided on G and P, "XB" cannot be selected.

Refer to pages 49 to 51 for electrical options, other options, and bracket/electrical entry direction.

Note) Products indicated will be shipped with a UL label.

For Medium vacuum

VX214 Valve type: N.C.

Size, Valve type, Fluid	Body material, Port size	Voltage, Electrical entry, Electrical options	Other options	With bracket
VX214	A	A	Nil	Nil
	B	B	A	XC*
	C	C	B	XB*
	D	D		XNB*
	E	E		X332*
	F	F		
	H	M		
	J	N		
	K	P		
	L	Q		
	M	R		
	N	S		
		T		
		U		
		V		
		W		
		Y		
		Z1A		
		Z1B		
		Z1C		
		Z1U		
		Z1D		
		Z1E		
		Z1K		
		Z1L		
		Z1M		
		Z1W		
		Z1N		
		Z1P		
		Z1Q		
		Z1R		
		Z1Y		
		Z1S		
		Z1T		
		Z2K		
		Z2L		
		Z2M		
		Z2N		
		Z2P		
		Z2Q		
		Z2R		
		Z2S		
		Z2W		
		Z2T		
		Z3A		
		Z3B		
		Z3C		
		Z3D		
		Z3E		
		Z3F		
		Z3G		
		Z3H		
		Z3V		
		Z3J		

VX224 Valve type: N.C.

Size, Valve type, Fluid	Body material, Port size	Voltage, Electrical entry, Electrical options	Other options	With bracket
VX224	A	A	Nil	Nil
	B	B	A	XC*
	D	C	B	XB*
	E	D		XNB*
	H	E		X332*
	J	F		
	L	M		
	M	N		
		P		
		Q		
		R		
		S		
		T		
		U		
		V		
		W		
		Y		
		Z1A		
		Z1B		
		Z1C		
		Z1U		
		Z1D		
		Z1E		
		Z1K		
		Z1L		
		Z1M		
		Z1W		
		Z1N		
		Z1P		
		Z1Q		
		Z1R		
		Z1Y		
		Z1S		
		Z1T		
		Z2K		
		Z2L		
		Z2M		
		Z2N		
		Z2P		
		Z2Q		
		Z2R		
		Z2S		
		Z2W		
		Z2T		
		Z3A		
		Z3B		
		Z3C		
		Z3D		
		Z3E		
		Z3F		
		Z3G		
		Z3H		
		Z3V		
		Z3J		

VX234 Valve type: N.C.

Size, Valve type, Fluid	Body material, Port size	Voltage, Electrical entry, Electrical options	Other options	With bracket
VX234	A	A	Nil	Nil
	B	B	A	XC*
	C	C	B	XB*
	D	D		XNB*
	E	E		X332*
	F	F		
	G Note)	M		
	H	N		
	J	P		
	K	Q		
	L	R		
	M	S		
	N	T		
	P Note)	U		
		V		
		W		
		Y		
		Z1A		
		Z1B		
		Z1C		
		Z1U		
		Z1D		
		Z1E		
		Z1K		
		Z1L		
		Z1M		
		Z1W		
		Z1N		
		Z1P		
		Z1Q		
		Z1R		
		Z1Y		
		Z1S		
		Z1T		
		Z2K		
		Z2L		
		Z2M		
		Z2N		
		Z2P		
		Z2Q		
		Z2R		
		Z2S		
		Z2W		
		Z2T		
		Z3A		
		Z3B		
		Z3C		
		Z3D		
		Z3E		
		Z3F		
		Z3G		
		Z3H		
		Z3V		
		Z3J		

Note) Body material/ Port size: Since "with bracket" setting is not provided on G and P, "XB" cannot be selected.

Refer to pages 49 to 51 for electrical options, other options, and bracket/electrical entry direction.

Note) Products indicated will be shipped with a UL label.

For Oil

VX213 Valve type: N.C.

Size, Valve type, Fluid	Body material, Port size	Voltage, Electrical entry, Electrical options	Other options	With bracket
VX213	A	A	Nil	Nil
	B	B	A	XC*
	C	C	B	XB*
	D	D	D	XNB*
	E	E	E	
	F	F	Z	
	H	M		
	J	N		
	K	P		
	L	Q		
	M	R		
	N	S		
		T		
		U		
		V		
		W		
		Y		
		Z1A		
		Z1B		
		Z1C		
		Z1U		
		Z1D		
		Z1E		
		Z1K		
		Z1L		
		Z1M		
		Z1W		
		Z1N		
		Z1P		
		Z1Q		
		Z1R		
		Z1Y		
		Z1S		
		Z1T		
		Z2K		
		Z2L		
		Z2M		
		Z2N		
		Z2P		
		Z2Q		
		Z2R		
		Z2S		
		Z2W		
		Z2T		
		Z3A		
		Z3B		
		Z3C		
		Z3D		
		Z3E		
		Z3F		
		Z3G		
		Z3H		
		Z3V		
		Z3J		

VX223 Valve type: N.C.

Size, Valve type, Fluid	Body material, Port size	Voltage, Electrical entry, Electrical options	Other options	With bracket
VX223	A	A	Nil	Nil
	B	B	A	XC*
	D	C	B	XB*
	E	D	D	XNB*
	H	E	E	
	J	F	Z	
	L	M		
	M	N		
		P		
		Q		
		R		
		S		
		T		
		U		
		V		
		W		
		Y		
		Z1A		
		Z1B		
		Z1C		
		Z1U		
		Z1D		
		Z1E		
		Z1K		
		Z1L		
		Z1M		
		Z1W		
		Z1N		
		Z1P		
		Z1Q		
		Z1R		
		Z1Y		
		Z1S		
		Z1T		
		Z2K		
		Z2L		
		Z2M		
		Z2N		
		Z2P		
		Z2Q		
		Z2R		
		Z2S		
		Z2W		
		Z2T		
		Z3A		
		Z3B		
		Z3C		
		Z3D		
		Z3E		
		Z3F		
		Z3G		
		Z3H		
		Z3V		
		Z3J		

VX233 Valve type: N.C.

Size, Valve type, Fluid	Body material, Port size	Voltage, Electrical entry, Electrical options	Other options	With bracket
VX233	A	A	Nil	Nil
	B	B	A	XC*
	C	C	B	XB*
	D	D	D	XNB*
	E	E	E	
	F	F	Z	
	G Note)	M		
	H	N		
	J	P		
	K	Q		
	L	R		
	M	S		
	N	T		
	P Note)	U		
		V		
		W		
		Y		
		Z1A		
		Z1B		
		Z1C		
		Z1U		
		Z1D		
		Z1E		
		Z1K		
		Z1L		
		Z1M		
		Z1W		
		Z1N		
		Z1P		
		Z1Q		
		Z1R		
		Z1Y		
		Z1S		
		Z1T		
		Z2K		
		Z2L		
		Z2M		
		Z2N		
		Z2P		
		Z2Q		
		Z2R		
		Z2S		
		Z2W		
		Z2T		
		Z3A		
		Z3B		
		Z3C		
		Z3D		
		Z3E		
		Z3F		
		Z3G		
		Z3H		
		Z3V		
		Z3J		

Note) Body material/Port size: Since "with bracket" setting is not provided on G and P, "XB" cannot be selected.

Refer to pages 49 to 51 for electrical options, other options, and bracket/electrical entry direction.

Construction/Single Unit

Normally Closed (N.C.)
Body material: Aluminum, C37, Stainless steel

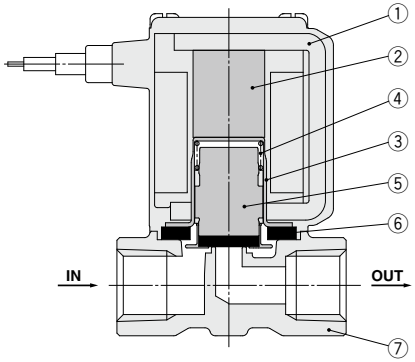

Component Parts

No.	Description	Material
1	**Solenoid coil**	Cu + Fe + Resin
2	**Core**	Fe
3	**Tube**	Stainless steel
4	**Spring**	Stainless steel
5	**Armature assembly**	NBR, FKM, Stainless steel, PPS
6	**Seal**	NBR, FKM
7	**Body**	Aluminum, C37, Stainless steel

Body material: Resin

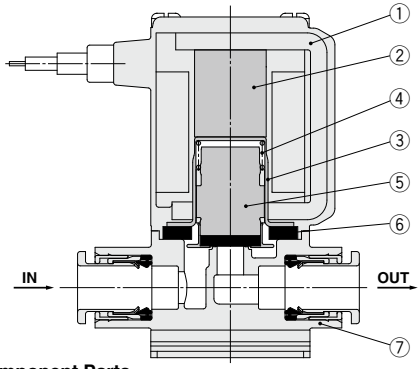

Component Parts

No.	Description	Material
1	**Solenoid coil**	Cu + Fe + Resin
2	**Core**	Fe
3	**Tube**	Stainless steel
4	**Spring**	Stainless steel
5	**Armature assembly**	NBR, FKM, Stainless steel, PPS
6	**Seal**	NBR, FKM
7	**Body**	Resin (PBT)

Normally Open (N.O.)
Body material: Aluminum, C37, Stainless steel

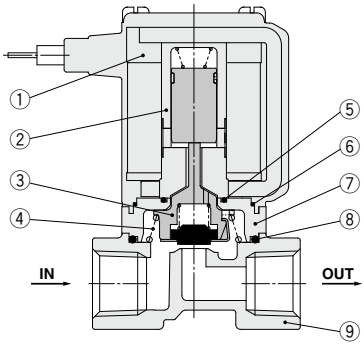

Component Parts

No.	Description	Material
1	**Solenoid coil**	Cu + Fe + Resin
2	**Sleeve assembly**	Stainless steel, Resin (PPS)
3	**Push rod assembly**	Resin (PPS), Stainless steel, NBR, FKM
4	**Spring**	Stainless steel
5	**O-ring A**	NBR, FKM
6	**O-ring B**	NBR, FKM
7	**Adapter**	Resin (PPS)
8	**O-ring C**	NBR, FKM
9	**Body**	Aluminum, C37, Stainless steel

Body material: Resin

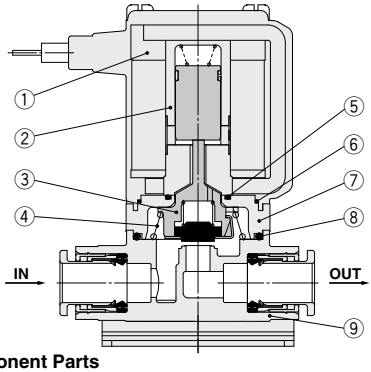

Component Parts

No.	Description	Material
1	**Solenoid coil**	Cu + Fe + Resin
2	**Sleeve assembly**	Stainless steel, Resin (PPS)
3	**Push rod assembly**	Resin (PPS), Stainless steel, NBR, FKM
4	**Spring**	Stainless steel
5	**O-ring A**	NBR, FKM
6	**O-ring B**	NBR, FKM
7	**Adapter**	Resin (PPS)
8	**O-ring C**	NBR, FKM
9	**Body**	Resin (PBT)

Construction/Manifold

Normally Closed (N.C.)
Base material: Aluminum

Common SUP type (for air)

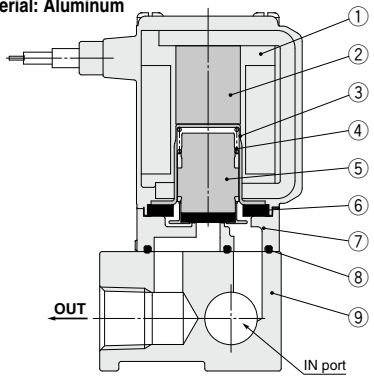

Individual SUP type (for medium vacuum)

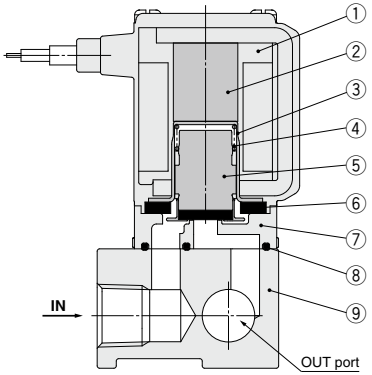

Component Parts

No.	Description	Material
1	**Solenoid coil**	Cu + Fe + Resin
2	**Core**	Fe
3	**Tube**	Stainless steel
4	**Spring**	Stainless steel
5	**Armature assembly**	NBR, FKM, Stainless steel, PPS
6	**Seal**	NBR, FKM
7	**Body**	Resin (PPS)
8	**Gasket**	NBR, FKM
9	**Base**	Aluminum

Normally Open (N.O.)
Base material: Aluminum

Common SUP type (for air)

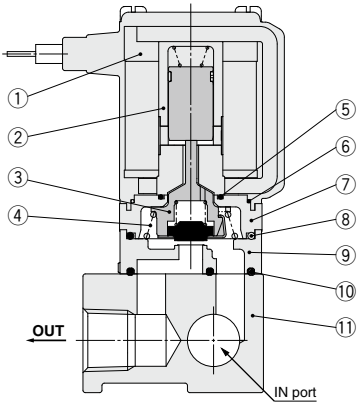

Individual SUP type (for medium vacuum)

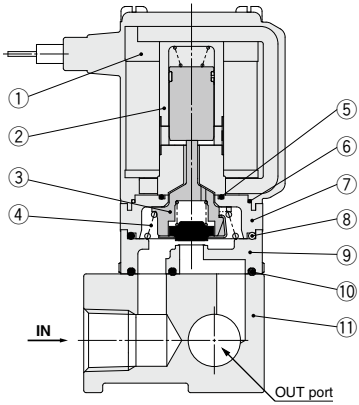

Component Parts

No.	Description	Material
1	**Solenoid coil**	Cu + Fe + Resin
2	**Sleeve assembly**	Stainless steel, Resin (PPS)
3	**Push rod assembly**	Resin (PPS), Stainless steel, NBR, FKM
4	**Spring**	Stainless steel
5	**O-ring A**	NBR, FKM
6	**O-ring B**	NBR, FKM

No.	Description	Material
7	**Adapter**	Resin (PPS)
8	**O-ring C**	NBR, FKM
9	**Body**	Resin (PPS)
10	**Gasket**	NBR, FKM
11	**Base**	Aluminum

Dimensions/Body Material: Aluminum

Grommet

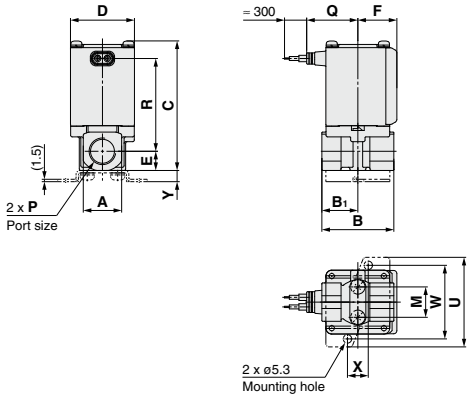

Grommet (with surge voltage suppressor)

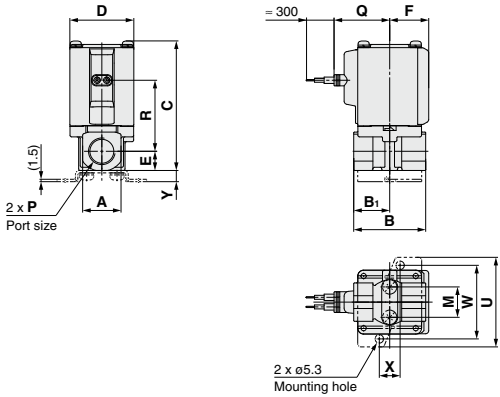

DIN terminal

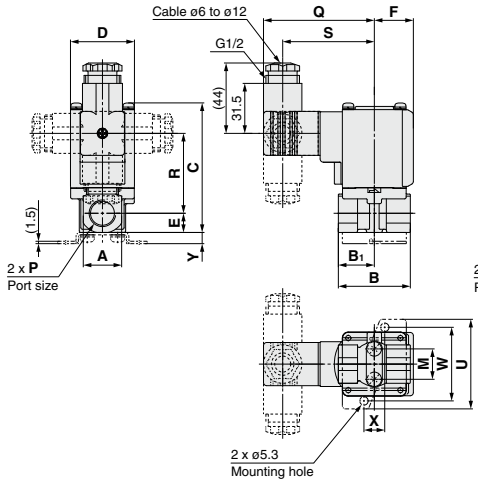

Conduit terminal

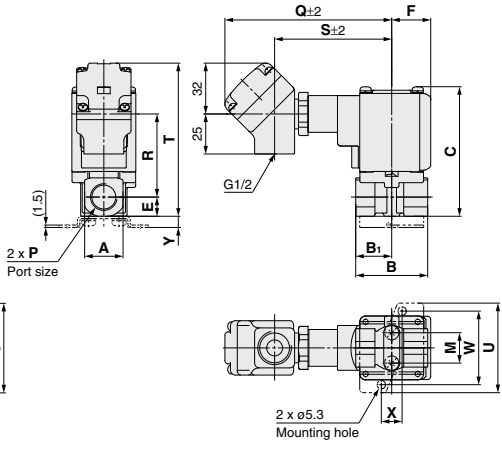

(mm)

Size	Port size P	A	B	B1	C	D	E	F	Mounting bracket dimensions				
									M	U	W	X	Y
1	1/8, 1/4	19	43	21	61 (67)	30	9.5	20	12.8	46	36	11	6
2	1/4, 3/8	24	45	22.5	76 (84)	35	12	22	19	56	46	13	7
3	1/4, 3/8	24	45	22.5	81 (89)	40	12	24.5	19	56	46	13	7
	1/2	30	50	25	86.5	40	15	24.5	—	—	—	—	—

Size	Port size P	Electrical entry										
		Grommet		Grommet (with surge voltage suppressor)		DIN terminal			Conduit terminal			
		Q	R	Q	R	Q	R	S	Q	R	S	T
1	1/8, 1/4	27	42 (47.5)	30	28.5 (34)	64.5	34 (39.5)	52.5	99.5	36 (41.5)	68.5	77 (83)
2	1/4, 3/8	29.5	53.5 (61.5)	32.5	39.5 (47.5)	67	45 (53)	55	102	47 (55)	71	91 (99)
3	1/4, 3/8	32	58 (66)	35	44.5 (52.5)	69.5	50 (58)	57.5	104.5	52 (60)	73.5	96 (104)
	1/2	32	61	35	47.5	69.5	53	57.5	104.5	55	73.5	101.5

( ): Denotes the Normally Open (N.O.) dimensions.

Dimensions/Body Material: Aluminum

Conduit

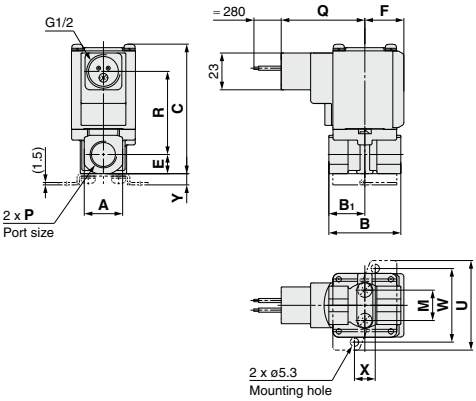

Flat terminal type

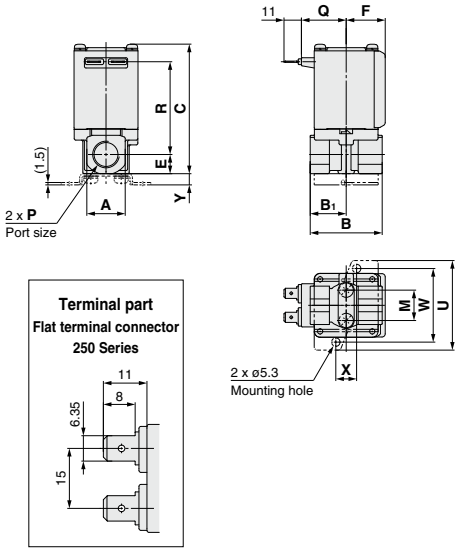

(mm)

Size	Port size P	A	B	B1	C	D	E	F	Mounting bracket dimensions				
									M	U	W	X	Y
1	1/8, 1/4	19	43	21	61 (67)	30	9.5	20	12.8	46	36	11	6
2	1/4, 3/8	24	45	22.5	76 (84)	35	12	22	19	56	46	13	7
3	1/4, 3/8	24	45	22.5	81 (89)	40	12	24.5	19	56	46	13	7
	1/2	30	50	25	86.5	40	15	24.5	—	—	—	—	—

Size	Port size P	Electrical entry			
		Conduit		Flat terminal type	
		Q	R	Q	R
1	1/8, 1/4	47.5	36 (41.5)	23	42 (47.5)
2	1/4, 3/8	50	47 (55)	25.5	53.5 (61.5)
3	1/4, 3/8	52.5	52 (60)	28	58 (66)
	1/2	52.5	55	28	61

( ): Denotes the Normally Open (N.O.) dimensions.

Dimensions/Body Material: Resin

Grommet

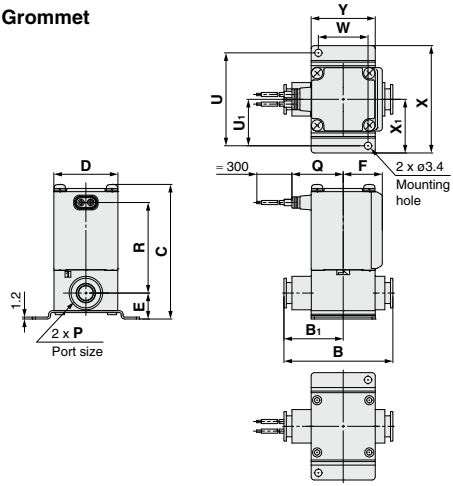

Grommet (with surge voltage suppressor)

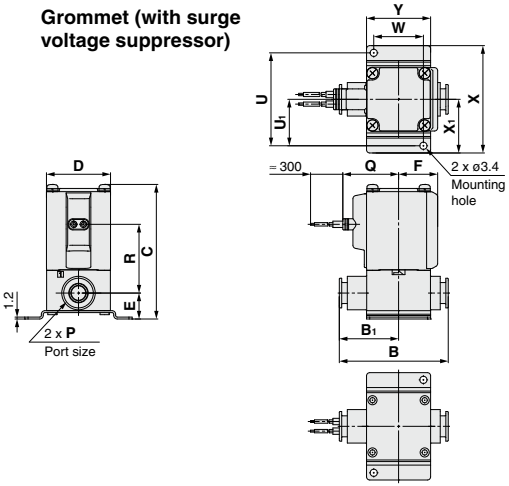

DIN terminal

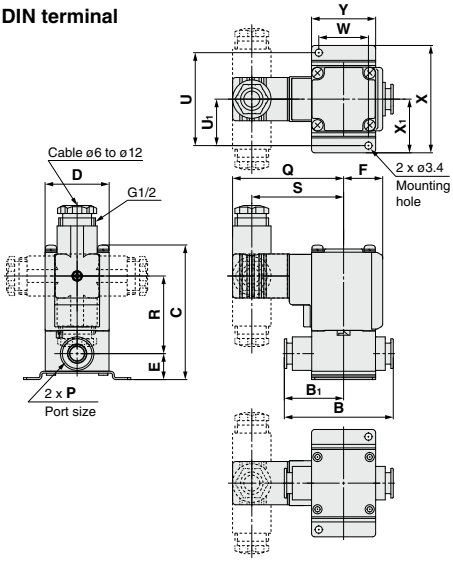

Conduit terminal

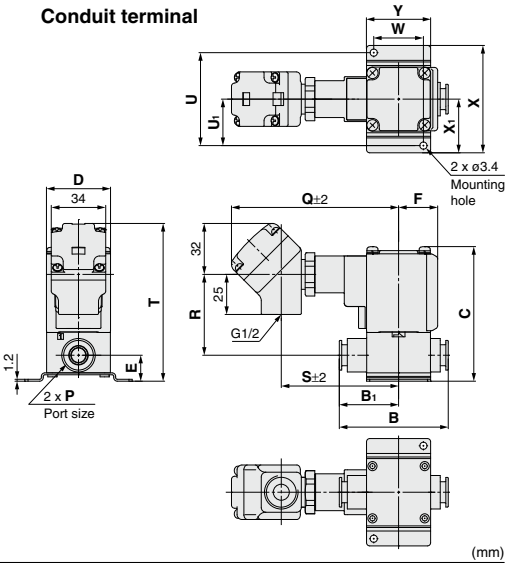

(mm)

Size	One-touch fitting P	B	B1	C	D	E	F	Mounting bracket dimensions					
								U	U1	W	X	X1	Y
1	ø6, ø8	53.5	29	65.5 (71.5)	30	13.5	20	45	22.5	22	52	26	30
2	ø8, ø10	66	36	76.5 (84.5)	35	15	22	53	26.5	27	62	31	35
3	ø10, ø12	68	37	84 (92)	40	16.5	24.5	58	29	31	67	33.5	40

Size	One-touch fitting P	Electrical entry										
		Grommet		Grommet (with surge voltage suppressor)		DIN terminal			Conduit terminal			
		Q	R	Q	R	Q	R	S	Q	R	S	T
1	ø6, ø8	27	42.5 (48)	30	29 (34.5)	64.5	34.5 (40)	52.5	99.5	36.5 (42)	68.5	81.5 (87)
2	ø8, ø10	29.5	51 (59)	32.5	37 (45)	67	43 (50.5)	55	102	45 (52.5)	71	91.5 (99.5)
3	ø10, ø12	32	56.5 (64.5)	35	43 (51)	69.5	48.5 (56.5)	57.5	104.5	50.5 (58.5)	73.5	98.5 (106.5)

( ): Denotes the Normally Open (N.O.) dimensions.

For information on handling One-touch fittings and on appropriate tubing, refer to page 76 and the Fittings & Tubing section of the "Handling Precautions for SMC Products" on the SMC website.

Dimensions/Body Material: Resin

Conduit

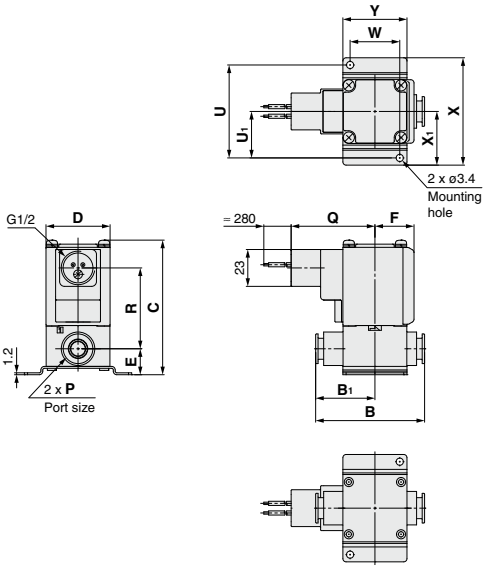

Flat terminal

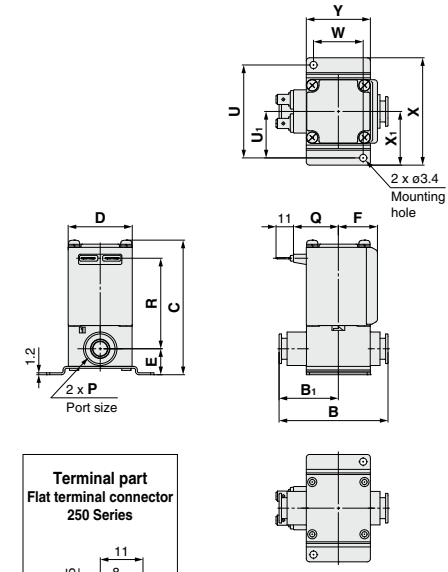

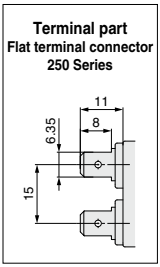

(mm)

Size	One-touch fitting **P**	B	B_1	C	D	E	F	Mounting bracket dimensions						Electrical entry			
														Conduit		Flat terminal	
								U	U_1	W	X	X_1	Y	Q	R	Q	R
1	ø6, ø8	53.5	29	65.5 (71.5)	30	13.5	20	45	22.5	22	52	26	30	47.5	36.5 (42)	23	42.5 (48)
2	ø8, ø10	66	36	76.5 (84.5)	35	15	22	53	26.5	27	62	31	35	50	45 (52.5)	25.5	51 (59)
3	ø10, ø12	68	37	84 (92)	40	16.5	24.5	58	29	31	67	33.5	40	52.5	50.5 (58.5)	28	56.5 (64.5)

( ): Denotes the Normally Open (N.O.) dimensions.

Dimensions/Body Material: C37, Stainless Steel

Grommet

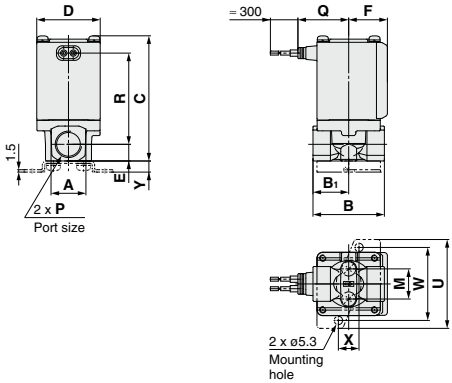

Grommet (with surge voltage suppressor)

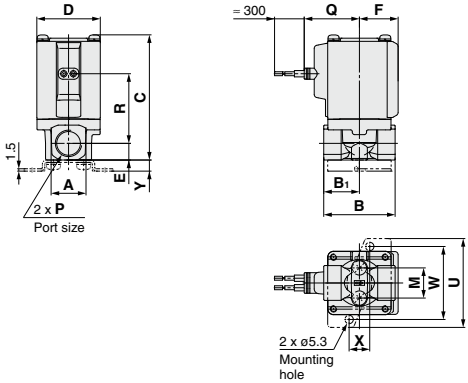

DIN terminal

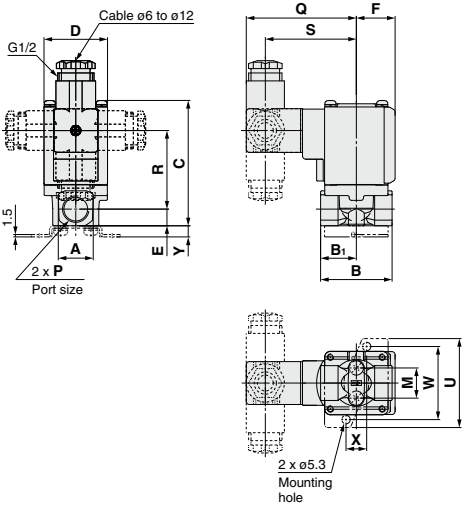

Conduit terminal

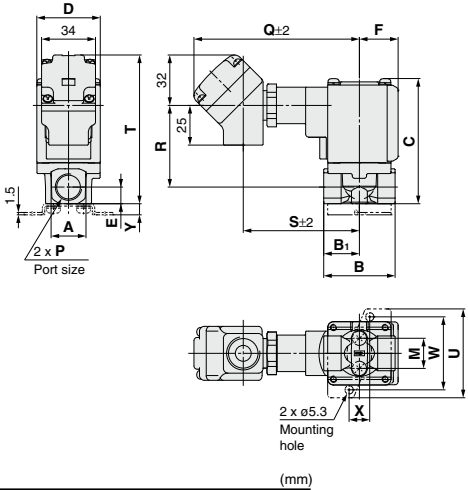

(mm)

Size	Port size P	A	B	B_1	C	D	E	F	Mounting bracket dimensions				
									M	U	W	X	Y
1	1/8, 1/4	19	43	21	61 (67)	30	9.5	20	12.8	46	36	11	6
2	1/4, 3/8	22	45	22.5	74.5 (82.5)	35	10.5	22	19	56	46	13	7
3	1/4, 3/8	22	45	22.5	79 (87)	40	10.5	24.5	19	56	46	13	7
	1/2	29.5	50	25	85.5	40	14	24.5	—	—	—	—	—

Size	Port size P	Electrical entry										
		Grommet		Grommet (with surge voltage suppressor)		DIN terminal			Conduit terminal			
		Q	R	Q	R	Q	R	S	Q	R	S	T
1	1/8, 1/4	27	42 (47.5)	30	28.5 (34)	64.5	34 (39.5)	52.5	99.5	36 (41.5)	68.5	77 (83)
2	1/4, 3/8	29.5	53.5 (61.5)	32.5	39.5 (47.5)	67	45 (53)	55	102	47 (55)	71	89.5 (97.5)
3	1/4, 3/8	32	57.5 (65.5)	35	44 (52)	69.5	49.5 (57.5)	57.5	104.5	51.5 (59.5)	73.5	94 (102)
	1/2	32	61	35	47.5	69.5	53	57.5	104.5	55	73.5	100.5

( ): Denotes the Normally Open (N.O.) dimensions.

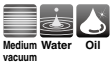

Dimensions/Body Material: C37, Stainless Steel

Conduit

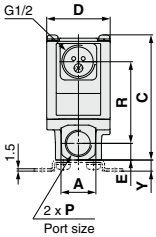

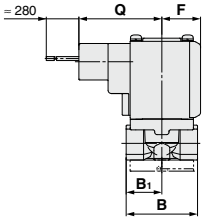

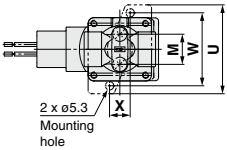

Flat terminal

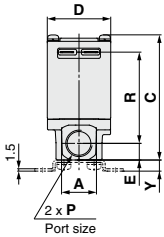

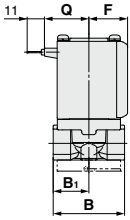

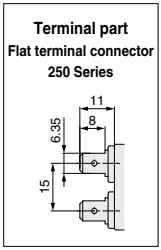

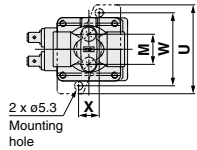

(mm)

Size	Port size P	A	B	B_1	C	D	E	F	Mounting bracket dimensions				
									M	U	W	X	Y
1	1/8, 1/4	19	43	21	61 (67)	30	9.5	20	12.8	46	36	11	6
2	1/4, 3/8	22	45	22.5	74.5 (82.5)	35	10.5	22	19	56	46	13	7
3	1/4, 3/8	22	45	22.5	79 (87)	40	10.5	24.5	19	56	46	13	7
	1/2	29.5	50	25	85.5	40	14	24.5	—	—	—	—	—

Size	Port size P	Electrical entry			
		Conduit		Flat terminal	
		Q	R	Q	R
1	1/8, 1/4	47.5	36 (41.5)	23	42 (47.5)
2	1/4, 3/8	50	47 (55)	25.5	53.5 (61.5)
3	1/4, 3/8	52.5	51.5 (59.5)	28	57.5 (65.5)
	1/2	52.5	55	28	61

( ): Denotes the Normally Open (N.O.) dimensions.

For Steam

* Can be used with heated water.

Dimensions/Body Material: C37, Stainless Steel

Grommet

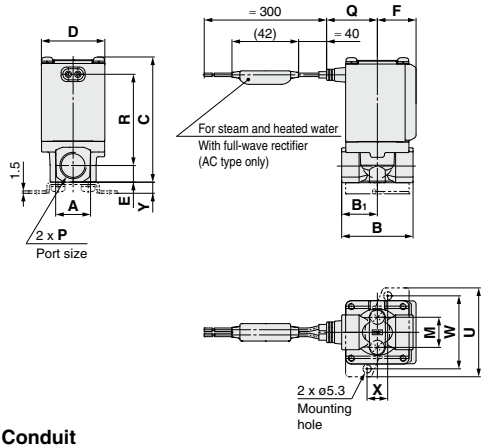

Conduit terminal

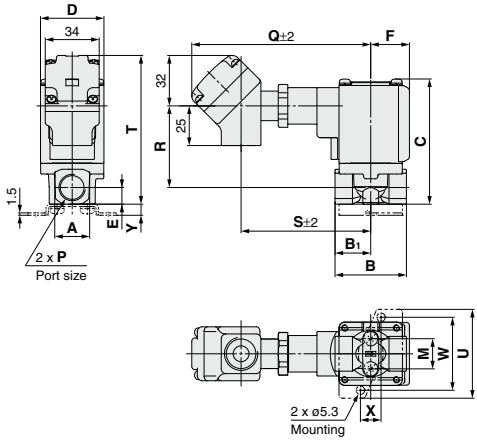

Conduit

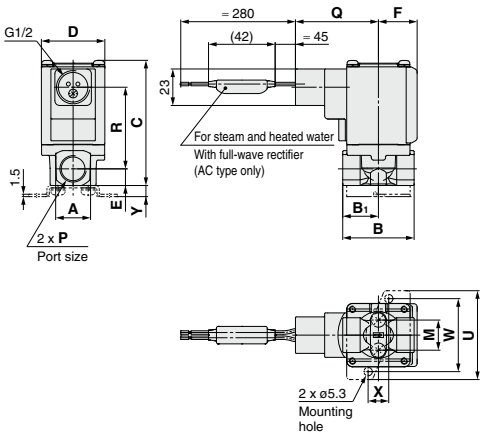

DIN terminal

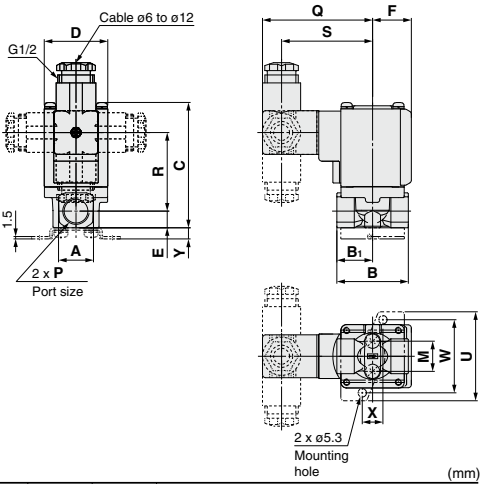

(mm)

Size	Port size P	A	B	B_1	C	D	E	F	Mounting bracket dimensions				
									M	U	W	X	Y
1	1/8, 1/4	19	43	21	61 (67)	30	9.5	20	12.8	46	36	11	6
2	1/4, 3/8	22	45	22.5	74.5 (82.5)	35	10.5	22	19	56	46	13	7
3	1/4, 3/8	22	45	22.5	79 (87)	40	10.5	24.5	19	56	46	13	7
	1/2	29.5	50	25	85.5	40	14	24.5	—	—	—	—	—

Size	Port size P	Electrical entry										
		Grommet		Conduit terminal				Conduit		DIN terminal		
		Q	R	Q	R	S	T	Q	R	Q	R	S
1	1/8, 1/4	27	42 (47.5)	108	36 (41.5)	77	77 (83)	47.5	36 (41.5)	64.5	34 (39.5)	52.5
2	1/4, 3/8	29.5	53.5 (61.5)	110.5	47 (55)	79.5	89.5 (97.5)	50	47 (55)	67	45 (53)	55
3	1/4, 3/8	32	57.5 (65.5)	113	51.5 (59.5)	82	94 (102)	52.5	51.5 (59.5)	69.5	49.5 (57.5)	57.5
	1/2	32	61	113	55	82	100.5	52.5	55	69.5	53	57.5

( ): Denotes the Normally Open (N.O.) dimensions.
Flat terminal is not available for valves for steam and heated water.

Dimensions/Manifold/Base Material: Aluminum

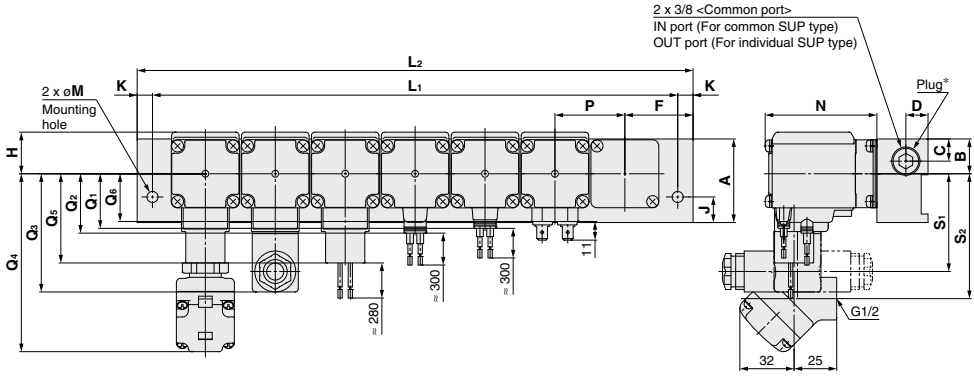

* D side port does not have a plug.

(mm)

Size	Dimensions	n (stations)								
		2	3	4	5	6	7	8	9	10
1	L_1	86	122	158	194	230	266	302	338	374
	L_2	100	136	172	208	244	280	316	352	388
2	L_1	90	126	162	198	234	270	306	342	378
	L_2	108	144	180	216	252	288	324	360	396
3	L_1	103	144	185	226	267	308	349	390	431
	L_2	121	162	203	244	285	326	367	408	449

Size	A	B	C	D	E	F	H	J	K	M	N	P
1	38	15.5	10.5	11	25	32	20	12	7	6.5	50.5 (56.5)	36
2	49	18	13	13	30	36	22	15	9	8.5	60.5 (68.5)	36
3	49	20.5	13	13	30	40	24.5	15	9	8.5	65.5 (73.5)	41

Size	Grommet		Grommet (With surge voltage suppressor)		DIN terminal*			Conduit terminal				Conduit		Flat terminal	
	Q_1	R_1	Q_2	R_2	Q_3	R_3	S_1	Q_4	R_4	S_2	T	Q_5	R_5	Q_6	R_6
1	27	40.5 (46.5)	30	27 (33)	64.5	32.5 (38.5)	52.5	99.5	34.5 (40.5)	68.5	66.5 (72)	47.5	34.5 (40.5)	23	40.5 (46.5)
2	29.5	49.5 (57.5)	32.5	36 (44)	67	41.5 (49.5)	55	102	43.5 (51.5)	71	75.5 (83.5)	50	43.5 (51.5)	25.5	49.5 (57.5)
3	32	54.5 (63)	35	41 (49)	69.5	46.5 (54.5)	57.5	104.5	48.5 (56.5)	73.5	80.5 (89.5)	52.5	48.5 (56.5)	28	54.5 (63)

( ): Denotes the Normally Open (N.O.) dimensions.

* When using a DIN terminal that faces downward, be careful of interference in the electrical wires and piping.

Replacement Parts

● DIN Connector Part No.

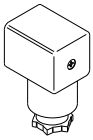

<For Class B Coil>

Electrical option	Rated voltage	Connector part no.
None	24 VDC	**3G-GDM2A-G**
	12 VDC	
	100 VAC	
	110 VAC	
	200 VAC	
	220 VAC	
	230 VAC	
	240 VAC	
	24 VAC	
	48 VAC	
With light	24 VDC	**GDM2A-L5**
	12 VDC	**GDM2A-L6**
	100 VAC	**GDM2A-L1**
	110 VAC	**GDM2A-L1**
	200 VAC	**GDM2A-L2**
	220 VAC	**GDM2A-L2**
	230 VAC	**GDM2A-L2**
	240 VAC	**GDM2A-L2**
	24 VAC	**GDM2A-L5**
	48 VAC	**GDM2A-L15**

<For Class H Coil>

Electrical option	Rated voltage	Connector part no.
None	24 VDC	**GDM2A-G-S5**
	100 VAC	**GDM2A-R**
	110 VAC	
	200 VAC	
	220 VAC	
	230 VAC	
	240 VAC	
	24 VAC	
	48 VAC	
With light	24 VDC	**GDM2A-G-Z5**
	100 VAC	**GDM2A-R-L1**
	110 VAC	**GDM2A-R-L1**
	200 VAC	**GDM2A-R-L2**
	220 VAC	**GDM2A-R-L2**
	230 VAC	**GDM2A-R-L2**
	240 VAC	**GDM2A-R-L2**
	24 VAC	**GDM2A-R-L5**
	48 VAC	**GDM2A-R-L5**

∗ Select an appropriate DIN connector suitable for the coil insulation type.

● Gasket Part No. for DIN Connector

VCW20-1-29-1 (For Class B Coil)
VCW20-1-29-1-F (For Class H Coil)

● Lead Wire Assembly for Flat Terminal (Set of 2 pcs.)

VX021S-1-16FB

● Bracket Assembly Part No. (for Metal Body)

VX02□N−12A

1	For VX2$^{1}_{4}$□□
2	For VX2$^{2}_{5}$□□
	For VX2$^{3}_{6}$□□

∗ 2 mounting screws are shipped together with the bracket assembly.
∗ On the bottom side of the standard body, there is no female thread for mounting a bracket.
Please select XNB□.

Glossary of Terms

Pressure Terminology

1. Maximum operating pressure differential

The maximum pressure differential (the difference between the inlet and outlet pressure) which is allowed for operation. When the outlet pressure is 0 MPa, this becomes the maximum operating pressure.

2. Minimum operating pressure differential

The minimum pressure differential (the difference between the inlet pressure and outlet pressure) required to keep the main valve fully open.

3. Maximum system pressure

The maximum pressure that can be applied inside the pipelines (line pressure).

[The pressure differential of the solenoid valve portion must not exceed the maximum operating pressure differential.]

4. Withstand pressure

The pressure in which the valve must be withstood without a drop in performance after holding for one minute under prescribed pressure and returning to the operating pressure range. [value under the prescribed conditions]

Electrical Terminology

1. Apparent power (VA)

Volt-ampere is the product of voltage (V) and current (A).
Power consumption (W): For AC, W = V·A·cos θ.
For DC, W = V·A.
Note) cos θ shows power factor. cos θ ≈ 0.9

2. Surge voltage

A high voltage which is momentarily generated by shutting off the power in the shut-off area.

3. Degree of protection

A degree defined in the "JIS C 0920: Waterproof test of electric machinery/appliance and the degree of protection against the intrusion of solid foreign objects."

Verify the degree of protection for each product.

IP – □ □

First characteristic numeral — **Second characteristic numeral**

●First Characteristics:
Degrees of protection against solid foreign objects

0	Non-protected
1	Protected against solid foreign objects of 50 mmø and greater
2	Protected against solid foreign objects of 12 mmø and greater
3	Protected against solid foreign objects of 2.5 mmø and greater
4	Protected against solid foreign objects of 1.0 mmø and greater
5	Dust-protected
6	Dust-tight

Electrical Terminology

●Second Characteristics:
Degrees of protection against water

0	Non-protected	—
1	Protected against vertically falling water drops	Dripproof type 1
2	Protected against vertically falling water drops when enclosure tilted up to 15°	Dripproof type 2
3	Protected against rainfall when enclosure tilted up to 60°	Rainproof type
4	Protected against splashing water	Splashproof type
5	Protected against water jets	Water-jet-proof type
6	Protected against powerful water jets	Powerful water-jet-proof type
7	Protected against the effects of temporary immersion in water	Immersible type
8	Protected against the effects of continuous immersion in water	Submersible type

Example) IP65: Dust-tight, Water-jet-proof type

"Water-jet-proof type" means that no water intrudes inside an equipment that could hinder from operating normally by means of applying water for 3 minutes in the prescribed manner. Take appropriate protection measures, since a device is not usable in an environment where a droplet of water is splashed constantly.

Others

1. Material

NBR: Nitrile rubber
FKM: Fluororubber
EPDM: Ethylene propylene rubber

2. Oil-free treatment

The degreasing and washing of wetted parts

3. Symbol

In the symbol ( ), when the valve is closed, flow is blocked from port 1 to port 2. However, if the pressure in port 2 is higher than port 1, the valve will not be able to block the fluid and it will flow from port 2 to port 1.

Flat Terminal

Flat terminal/Electrical connection size of molded coil

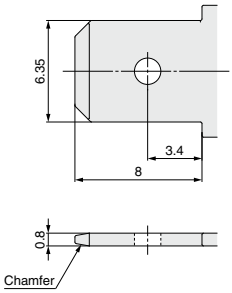

Solenoid Valve Flow Rate Characteristics
(How to indicate flow rate characteristics)

1. Indication of flow rate characteristics

The flow rate characteristics in equipment such as a solenoid valve, etc. are indicated in their specifications as shown in Table (1).

Table (1) Indication of Flow Rate Characteristics

Corresponding equipment	Indication by international standard	Other indications	Conformed standard
Pneumatic equipment	*C*, *b*	—	ISO 6358: 1989 JIS B 8390: 2000
	—	*S*	JIS B 8390: 2000 Equipment: JIS B 8379, 8381-1, 8381-2
		Cv	ANSI/(NFPA)T3.21.3 R1-2008
Process fluid control equipment	*Kv*	—	IEC60534-1: 2005 IEC60534-2-3: 1997 JIS B 2005-1: 2012 JIS B 2005-2-3: 2004 Equipment: JIS B 8471, 8472, 8473
	—	*Cv*	

2. Pneumatic equipment

2.1 Indication according to the international standards

(1) Conformed standard

ISO 6358: 1989 : Pneumatic fluid power—Components using compressible fluids—Determination of flow rate characteristics

JIS B 8390: 2000 : Pneumatic fluid power—Components using compressible fluids—How to test flow rate characteristics

(2) Definition of flow rate characteristics

The flow rate characteristics are indicated as a result of a comparison between sonic conductance ***C*** and critical pressure ratio ***b***.

Sonic conductance ***C*** : Value which divides the passing mass flow rate of an equipment in a choked flow condition by the product of the upstream absolute pressure and the density in a standard condition.

Critical pressure ratio ***b*** : Pressure ratio (downstream pressure/upstream pressure) which will turn to a choked flow when the value is smaller than this ratio.

Choked flow : The flow in which the upstream pressure is higher than the downstream pressure and where sonic speed in a certain part of an equipment is reached.
Gaseous mass flow rate is in proportion to the upstream pressure and not dependent on the downstream pressure.

Subsonic flow : Flow greater than the critical pressure ratio

Standard condition : Air in a temperature state of 20°C, absolute pressure 0.1 MPa (= 100 kPa = 1 bar), relative humidity 65%.
It is stipulated by adding the "(ANR)" after the unit depicting air volume.
(standard reference atmosphere)
Conformed standard: ISO 8778: 1990 Pneumatic fluid power—Standard reference atmosphere, JIS B 8393: 2000: Pneumatic fluid power—Standard reference atmosphere

(3) Formula for flow rate

It is described by the practical units as following.

When

$$\frac{P_2 + 0.1}{P_1 + 0.1} \leq b, \text{ choked flow}$$

$$Q = 600 \times C\,(P_1 + 0.1)\sqrt{\frac{293}{273 + T}} \quad \cdots\cdots (1)$$

When

$$\frac{P_2 + 0.1}{P_1 + 0.1} > b, \text{ subsonic flow}$$

$$Q = 600 \times C\,(P_1 + 0.1)\sqrt{1 - \left[\frac{\frac{P_2 + 0.1}{P_1 + 0.1} - b}{1 - b}\right]^2}\sqrt{\frac{293}{273 + T}} \quad \cdots\cdots (2)$$

Q : Air flow rate [L/min (ANR)]
C : Sonic conductance [dm³/(s·bar)], dm³ (Cubic decimeter) of SI = L (liter).
b : Critical pressure ratio [—]
P_1 : Upstream pressure [MPa]
P_2 : Downstream pressure [MPa]
T : Temperature [°C]
Note) Formula of subsonic flow is the elliptic analogous curve.
Flow rate characteristics are shown in Graph (1) For details, please use the calculation software available from SMC website.

Example)
Obtain the air flow rate for P_1 = 0.4 [MPa], P_2 = 0.3 [MPa], ***T*** = 20 [°C] when a solenoid valve is performed in ***C*** = 2 [dm³/(s·bar)] and ***b*** = 0.3.

According to formula 1, the maximum flow rate = 600 x 2 x (0.4 + 0.1) x $\sqrt{\dfrac{293}{273 + 20}}$ = 600 [L/min (ANR)]

Pressure ratio = $\dfrac{0.3 + 0.1}{0.4 + 0.1}$ = 0.8

Based on Graph (1), it is going to be 0.7 if it is read by the pressure ratio as 0.8 and the flow ratio to be ***b*** = 0.3.
Hence, flow rate = Max. flow x flow ratio = 600 x 0.7 = 420 [L/min (ANR)]

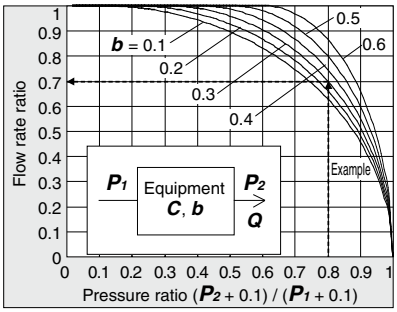

Graph (1) Flow rate characteristics

(4) Test method

Attach a test equipment with the test circuit shown in Fig. (1) while maintaining the upstream pressure to a certain level which does not go below 0.3 MPa. Next, measure the maximum flow to be saturated in the first place, then measure this flow rate at 80%, 60%, 40%, 20% and the upstream and downstream pressure. And then, obtain the sonic conductance ***C*** from this maximum flow rate. In addition, calculate ***b*** using each data of others and the subsonic flow formula, and then obtain the critical pressure ratio ***b*** from that average.

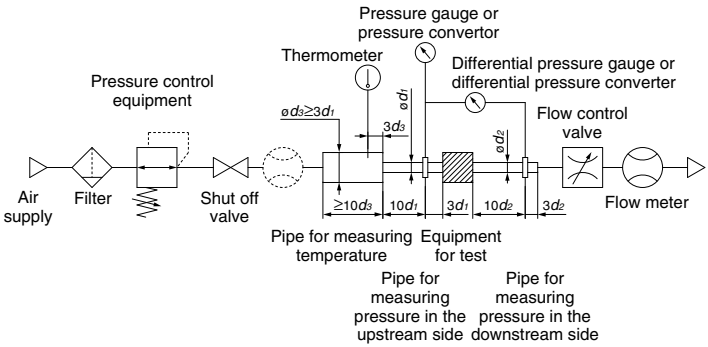

Fig. (1) Test circuit based on ISO 6358: 1989, JIS B 8390: 2000

2.2 Effective area *S*

(1) Conformed standard

JIS B 8390: 2000: Pneumatic fluid power—Components using compressible fluids—Determination of flow rate characteristics

Equipment standards: JIS B 8373: Solenoid valve for pneumatics
JIS B 8379: Silencer for pneumatics
JIS B 8381-1: Fittings for pneumatics—Part 1: Push-in fittings for thermoplastic resin tubing
JIS B 8381-2: Fittings for pneumatics—Part 2: Compression fittings for thermoplastic resin tubing

(2) Definition of flow rate characteristics

Effective area ***S***: The cross-sectional area having an ideal throttle without friction deduced from the calculation of the pressure changes inside an air tank or without reduced flow when discharging the compressed air in a choked flow, from an equipment attached to the air tank. This is the same concept representing the "easy to run through" as sonic conductance ***C***.

(3) Formula for flow rate

When

$\frac{P_2 + 0.1}{P_1 + 0.1}$ 0.5, **choked flow**

$$Q = 120 \times S\,(P_1 + 0.1)\sqrt{\frac{293}{273 + T}} \quad \cdots\cdots (3)$$

When

$\frac{P_2 + 0.1}{P_1 + 0.1} > 0.5$, **subsonic flow**

$$Q = 240 \times S\,\sqrt{(P_2 + 0.1)\,(P_1 - P_2)}\sqrt{\frac{293}{273 + T}} \quad \cdots\cdots (4)$$

Conversion with sonic conductance ***C***:

$$S = 5.0 \times C \quad \cdots\cdots (5)$$

Q : Air flow rate[L/min(ANR)]
S : Effective area [mm²]
P_1 : Upstream pressure [MPa]
P_2 : Downstream pressure [MPa]
T : Temperature [°C]

Note) Formula for subsonic flow (4) is only applicable when the critical pressure ratio ***b*** is the unknown equipment. In the formula (2) by the sonic conductance ***C***, it is the same formula as when ***b*** = 0.5.

(4) Test method

Attach a test equipment with the test circuit shown in Fig. (2) in order to discharge air into the atmosphere until the pressure inside the air tank goes down to 0.25 MPa (0.2 MPa) from an air tank filled with the compressed air at a certain pressure level (0.5 MPa) which does not go below 0.6 MPa. At this time, measure the discharging time and the residual pressure inside the air tank which had been left until it turned to be the normal values to determine the effective area ***S***, using the following formula. The volume of an air tank should be selected within the specified range by corresponding to the effective area of an equipment for test. In the case of JIS B 8379, the pressure values are in parentheses and the coefficient of the formula is 12.9.

$$S = 12.1\,\frac{V}{t}\,\log_{10}\left(\frac{P_s + 0.1}{P + 0.1}\right)\sqrt{\frac{293}{T}} \quad \cdots\cdots (6)$$

S : Effective area [mm²]
V : Air tank capacity [L]
t : Discharging time [s]
P_s : Pressure inside air tank before discharging [MPa]
P : Residual pressure inside air tank after discharging [MPa]
T : Temperature inside air tank before discharging [K]

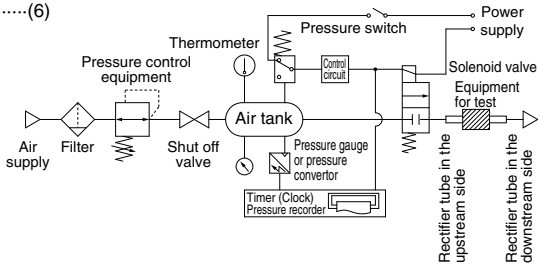

Fig. (2) Test circuit based on JIS B 8390: 2000

2.3 Flow coefficient *Cv* factor

The United States Standard ANSI/(NFPA)T3.21.3: R1-2008R: Pneumatic fluid power—Flow rating test procedure and reporting method for fixed orifice components

This standard defines the ***Cv*** factor of the flow coefficient by the following formula that is based on the test conducted by the test circuit analogous to ISO 6358.

$$Cv = \frac{Q}{114.5\sqrt{\frac{\Delta P\,(P_2 + P_a)}{T_1}}} \quad \cdots\cdots (7)$$

ΔP : Pressure drop between the static pressure tapping ports [bar]
P_1 : Pressure of the upstream tapping port [bar gauge]
P_2 : Pressure of the downstream tapping port [bar gauge]: $P_2 = P_1 - \Delta P$
Q : Flow rate [L/s standard condition]
P_a : Atmospheric pressure [bar absolute]
T_1 : Upstream absolute temperature [K]
Test conditions are < $P_1 + P_a = 6.5 \pm 0.2$ bar absolute, $T_1 = 297 \pm 5$K, 0.07 bar $\leq \Delta P$ 0.14 bar.
This is the same concept as effective area ***A*** which ISO 6358 stipulates as being applicable only when the pressure drop is smaller than the upstream pressure and the compression of air does not become a problem.

3. Process fluid control equipment

(1) Conformed standard

IEC60534-1: 2005: Industrial-process control valves. Part 1: control valve terminology and general considerations
IEC60534-2-3: 1997: Industrial-process control valves. Part 2: Flow capacity, Section Three-Test procedures
JIS B 2005-1: 2012: Industrial-process control valves – Part 1: Control valve terminology and general considerations
JIS B 2005-2-3: 2004: Industrial-process control valves – Part 2: Flow capacity – Section 3: Test procedures
Equipment standards: JIS B 8471: Solenoid valve for water
JIS B 8472: Solenoid valve for steam
JIS B 8473: Solenoid valve for fuel oil

(2) Definition of flow rate characteristics

Kv factor: Value of the clean water flow rate represented by m³/h that runs through the valve (equipment for test) at 5 to 40°C, when the pressure difference is 1 x 105 Pa (1 bar). It is calculated using the following formula:

$$Kv = Q\sqrt{\frac{1 \times 10^5}{\Delta P} \cdot \frac{\rho}{1000}} \quad \cdots\cdots (8)$$

Kv : Flow coefficient [m³/h]
Q : Flow rate [m³/h]
ΔP : Pressure difference [Pa]
ρ : Density of fluid [kg/m³]

(3) Formula of flow rate

It is described by the practical units. Also, the flow rate characteristics are shown in Graph (2).
In the case of liquid:

$$Q = 53Kv\sqrt{\frac{\Delta P}{G}} \quad \cdots\cdots (9)$$

Q : Flow rate [L/min]
Kv : Flow coefficient [m³/h]
ΔP : Pressure difference [MPa]
G : Relative density [water = 1]
In the case of saturated aqueous vapor:

$$Q = 232Kv\sqrt{\Delta P(P_2 + 0.1)} \quad \cdots\cdots (10)$$

Q : Flow rate [kg/h]
Kv : Flow coefficient [m³/h]
ΔP : Pressure difference [MPa]
P_1 : Upstream pressure [MPa]: $\Delta P = P_1 - P_2$
P_2 : Downstream pressure [MPa]

Conversion of flow coefficient:

$Kv = 0.865\ Cv$ ·····(11)

Here,

Cv factor: Value of the clean water flow rate represented by US gal/min that runs through the valve at 40 to 100°F, when the pressure difference is 1 lbf/in^2 (psi)

Value is different from ***Kv*** and ***Cv*** factors for pneumatic purpose due to different test method.

(4) Test method

Connect the equipment for the test to the test circuit shown in Fig. (3), and run water at 5 to 40°C. Then, measure the flow rate with a pressure difference where vaporization does not occur in a turbulent flow (pressure difference of 0.035 MPa to 0.075 MPa when the inlet pressure is within 0.15 MPa to 0.6 MPa). However, as the turbulent flow is definitely caused, the pressure difference needs to be set with a large enough difference so that the Reynolds number does not fall below 1 x 105, and the inlet pressure needs to be set slightly higher to prevent vaporization of the liquid. Substitute the measurement results in formula (8) to calculate ***Kv***.

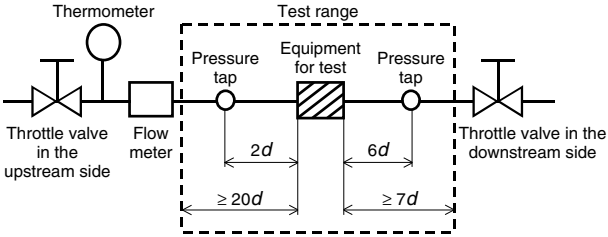

Fig. (3) Test circuit based on IEC60534-2-3, JIS B 2005-2-3

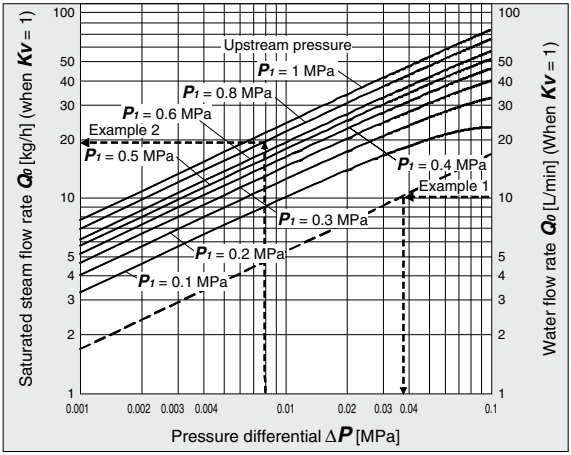

Graph (2) Flow rate characteristics

Example 1)

Obtain the pressure difference when water [15 L/min] runs through the solenoid valve with a ***Kv*** = 1.5 m^3/h.
As the flow rate when ***Kv*** = 1 is calculated as the formula: Q_0 = 15 x 1/1.5 = 10 [L/min], read off ΔP when Q_0 is 10 [L/min] in Graph (2). The reading is 0.036 [MPa].

Example 2)

Obtain the saturated steam flow rate when P_1 = 0.8 [MPa] and ΔP = 0.008 [MPa] with a solenoid valve with a ***Kv*** = 0.05 [m^3/h]. Read off Q_0 when P_1 is 0.8 and ΔP is 0.008 in Graph (2), the reading is 20 kg/h. Therefore, the flow rate is calculated as the formula: Q = 0.05/1 x 20 = 1 [kg/h].

Flow Rate Characteristics 1

Note) Use this graph as a guide. In the case of obtaining an accurate flow rate, refer to pages 66 through to 70.

For Air

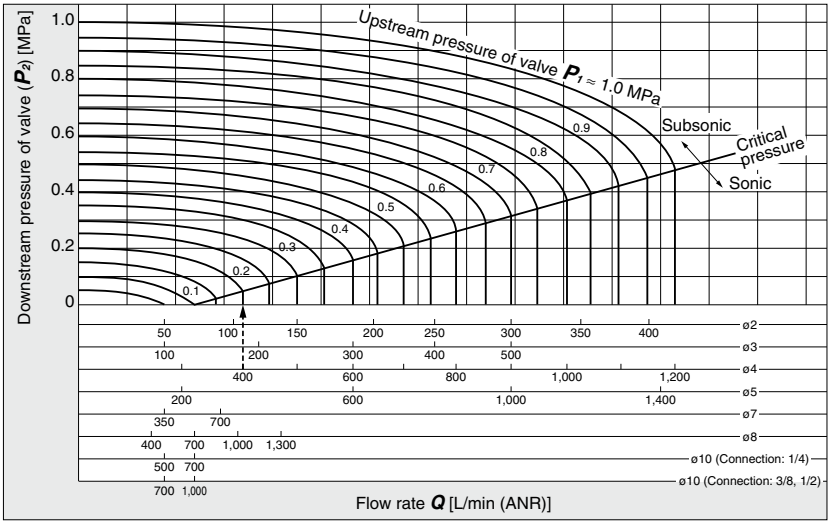

How to read the graph

The sonic range pressure to generate a flow rate of 400 L/min (ANR) is $P_1 \approx 0.2$ MPa for a ø4 orifice and $P_1 \approx 0.58$ MPa for a ø3 orifice.

For Water

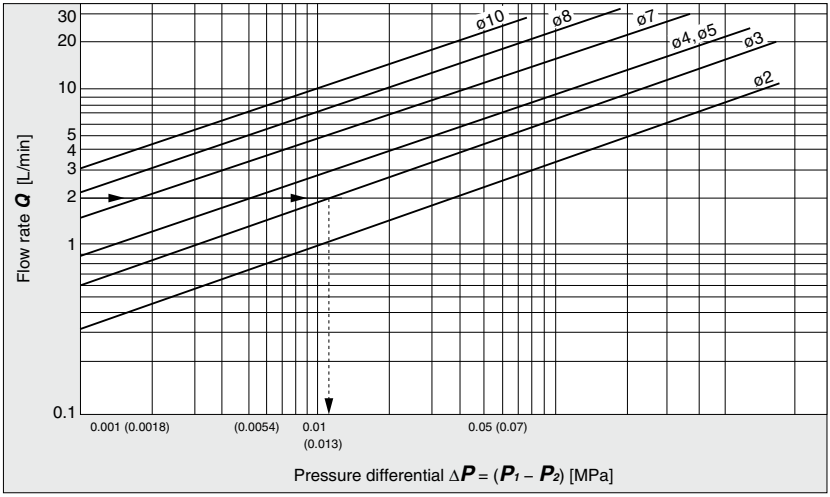

How to read the graph

When a water flow of 2 L/min is generated, $\Delta P \approx 0.013$ MPa for a valve with ø3 orifice.

Flow Rate Characteristics 2

Note) Use this graph as a guide. In the case of obtaining an accurate flow rate, refer to pages 66 through to 70.

For Saturated Steam

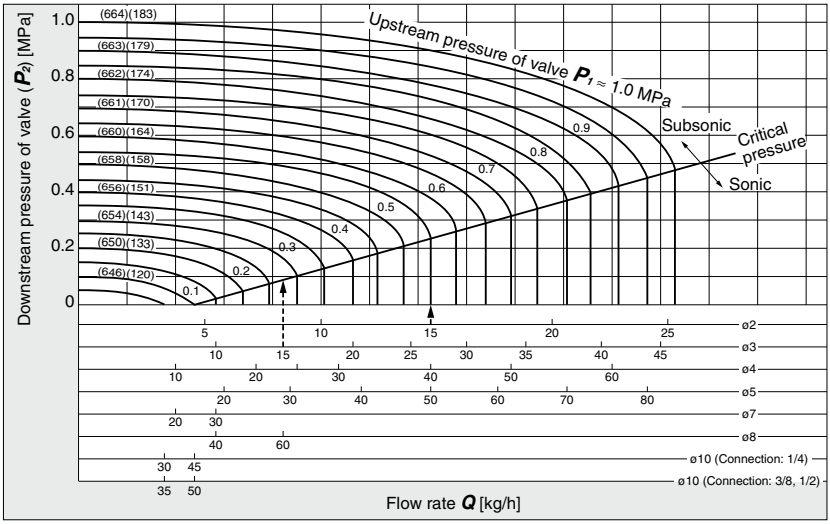

How to read the graph

The sonic range pressure to generate a flow rate of 15 kg/h is $P_1 \approx 0.55$ MPa for a ø2 orifice and $P_1 \approx 0.28$ MPa for a ø3 orifice.

Specific Product Precautions 1

Be sure to read this before handling the products.
Refer to back page 50 for Safety Instructions and pages 17 to 19 for 2 Port Solenoid Valve for Fluid Control Precautions.

Design

⚠Warning

1. Cannot be used as an emergency shutoff valve etc.
The valves presented in this catalog are not designed for safety applications such as an emergency shutoff valve. If the valves are used in this type of system, other reliable safety assurance measures should also be adopted.

2. Extended periods of continuous energization
The solenoid coil will generate heat when continuously energized. Avoid using in a tightly shut container. Install the valve in a well-ventilated area. Furthermore, do not touch it while it is being energized or right after it has been energized.

3. Closed liquid circuit
In a closed circuit, when liquid is static, pressure could rise due to changes in temperature. This pressure rise could cause malfunction and damage to components such as valves. To prevent this, install a relief valve in the system.

4. Actuator drive
When an actuator, such as a cylinder, is to be driven using a valve, take appropriate measures to prevent potential danger caused by actuator operation.

5. Pressure (including vacuum) holding
It is not usable for an application such as holding the pressure (including vacuum) inside of a pressure vessel because air leakage is entailed in a valve.

6. When the conduit type is used as equivalent to an IP65 enclosure, install a wiring conduit etc.

7. When an impact, such as water hammer etc., caused by the rapid pressure fluctuation is applied, the solenoid valve may be damaged. Give an attention to it.

Selection

⚠Warning

1. Fluid

1) Type of fluid
Before using a fluid, check whether it is compatible with the materials of each model by referring to the fluids listed in this catalog. Use a fluid with a kinematic viscosity of 50 mm^2/s or less.

2) Flammable oil, Gas
Do not use the product with combustion-supporting or flammable fluids.

3) Corrosive gas
Cannot be used since it will lead to cracks by stress corrosion or result in other incidents.

4) When a brass body is used, then depending on water quality, corrosion and internal leakage may occur. If such abnormalities occur, exchange the product for a stainless steel body.

5) Use an oil-free specification when any oily particle must not enter the passage.

6) Applicable fluid on the list may not be used depending on the operating condition. Give adequate confirmation, and then determine a model, just because the compatibility list shows the general case.

Selection

⚠Warning

2. Fluid quality

<Air>

1) Use clean air.
Do not use compressed air that contains chemicals, synthetic oils including organic solvents, salt or corrosive gases, etc., as it can cause damage or malfunction.

2) Install an air filter.
Install air filters close to the valves on the upstream side. A filtration degree of 5 μm or less should be selected.

3) Install an aftercooler or air dryer, etc.
Compressed air that contains excessive drainage may cause malfunction of valves and other pneumatic equipment. To prevent this, install an aftercooler or air dryer, etc.

4) If excessive carbon powder is generated, eliminate it by installing mist separators at the upstream side of valves.
If excessive carbon powder is generated by the compressor, it may adhere to the inside of the valves and cause a malfunction.

Refer to Best Pneumatics No.5 for further details on compressed air quality.

<Vacuum>

Please be aware that there is a range of pressure that can be used.

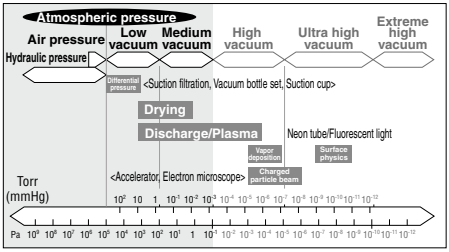

Vacuum piping direction: if the system uses a vacuum pump, we ask that you install the vacuum pump on the secondary side.

Also, install a filter on the primary side, and be careful that no foreign object is picked up.

Please replace the valve after operating the device approximately 300,000 times.

VX21/22/23 Series
Specific Product Precautions 2

Be sure to read this before handling the products.
Refer to back page 50 for Safety Instructions and pages 17 to 19 for 2 Port Solenoid Valve for Fluid Control Precautions.

Selection

⚠Warning

<Water>

Be aware that rust stains, chloride separation, etc., from the piping may cause malfunction, leakage, or, in worse case scenarios, damage due to corrosion. Also, such damage may result in the spraying of fluids or scattering of parts. Please be sure to have protective measures in place in case such incidents should occur.
The use of a fluid that contains foreign objects can cause problems such as malfunction and seal failure by promoting wear of the valve seat and armature and by sticking to the sliding parts of the armature etc. Install a suitable filter (strainer) immediately upstream from the valve. As a general rule, use 100 mesh.
The supply water includes materials that create a hard sediment or sludge such as calcium and magnesium. Since this scale and sludge can cause the valve to malfunction, install water softening equipment, and a filter (strainer) directly upstream from the valve to remove these substances.

Tap water pressure:
The water pressure for tap water is normally 0.4 MPa or less. However, in places like a high-rise building, the pressure may be 1.0 MPa. When selecting tap water, be careful of the maximum operating pressure differential.

When using water or heated water, poor operation or leaks may be caused by dezincification, erosion, corrosion, etc. We offer a stainless steel body type with improved corrosion resistance. Please use the one that fits your needs.

<Oil>

Generally, FKM is used as seal material, as it is resistant to oil. The resistance of the seal material may deteriorate depending on the type of oil, manufacturer or additives. Check the resistance before using. The kinematic viscosity must not exceed 50 mm²/s.

<Steam>

The use of a steam that contains foreign objects can cause problems such as malfunction and seal failure by promoting wear of the valve seat and armature, and by sticking to the sliding parts of the armature etc. Install a suitable filter (strainer) immediately upstream from the valve.
As a standard, the mesh count for the strainer is 100 mesh. However, the size and shape of foreign objects that occur depends on the operating environment. Check the fluid status and choose an appropriate mesh count.
The supply water to a boiler includes materials that create a hard sediment or sludge such as calcium and magnesium.
Sediment and sludge from steam can cause the valve to not operate properly. Install a water softening device, which removes these materials. Do not use operation steam which contains chemicals, synthetic oils containing organic solvents, salts or corrosive gases, etc., as these can cause damage or deterioration.
The seal material (special FKM) used for wetted parts of the product can withstand steam in standard conditions.
However, the resistance of the sealing material can deteriorate depending on the types of additives such as boiler compounds and water conditioners within the boiler steam. Please only utilize the product after determining the sealing material resistance within the actual usage conditions.

3. Ambient environment
Use within the operable ambient temperature range. Check the compatibility between the product's composition materials and the ambient atmosphere. Be certain that the fluid used does not touch the external surface of the product.

4. Countermeasures against static electricity
Take measures to prevent static electricity since some fluids can cause static electricity.

Selection

⚠Warning

5. Low temperature operation
1) The valve can be used in an ambient temperature of between –20 to –10°C. However, take measures to prevent freezing or solidification of impurities, etc.
2) When using valves for water application in cold climates, take appropriate countermeasures to prevent the water from freezing in tubing after cutting the water supply from the pump, by draining the water etc. When warming by a heater etc., be careful not to expose the coil portion to a heater. Installation of a dryer, heat retaining of the body is recommended to prevent a freezing condition in which the dew point temperature is high and the ambient temperature is low, and the high flow runs.

⚠Caution

1. Leakage voltage
When the solenoid valve is operated using the controller, etc., the leakage voltage should be the product allowable leakage voltage or less. Particularly when using a resistor in parallel with a switching element and using a C-R element (surge voltage suppressor) to protect the switching element, take note that leakage current will flow through the resistor, C-R element, etc., creating a possible danger that the valve may not turn off.

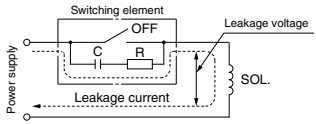

AC coil: 5% or less of rated voltage
DC coil: 2% or less of rated voltage

2. Selecting model
Material depends on fluid. Select optimal models for the fluid.

3. When the fluid is oil.
The kinematic viscosity must not exceed 50 mm²/s.

Mounting

⚠Warning

1. If air leakage increases or equipment does not operate properly, stop operation.
After mounting is completed, confirm that it has been done correctly by performing a suitable function test.

2. Do not apply external force to the coil section.
When tightening is performed, apply a wrench or other tool to the outside of the piping connection parts.

3. Mount a valve with its coil position upward, not downward.
When mounting a valve with its coil positioned downward, foreign objects in the fluid will adhere to the iron core leading to a malfunction. Especially for strict leakage control, such as with vacuum applications and non-leak specifications, the coil must be positioned upward.

4. Do not warm the coil assembly with a heat insulator etc.
Use tape, heaters, etc., for freeze prevention on the piping and body only. They can cause the coil to burn out.

VX21/22/23 Series
Specific Product Precautions 3

Be sure to read this before handling the products.
Refer to back page 50 for Safety Instructions and pages 17 to 19 for 2 Port Solenoid Valve for Fluid Control Precautions.

Mounting

⚠Warning

5. Secure with brackets, except in the case of steel piping and copper fittings.

6. Avoid sources of vibration, or adjust the arm from the body to the minimum length so that resonance will not occur.

7. Painting and coating

Warnings or specifications printed or labeled on the product should not be erased, removed or covered up.

Disassembly/Assembly Procedures

⚠Caution

1. Before starting the disassembly work, be sure to shut off the power supply and pressure supply, and then release the residual pressure.

Disassembly

<N.C.>

1) Loosen the mounting screws.
The coil assembly, seal, return spring, armature assembly and body can be removed.

<N.O.>

1) Loosen the mounting screws.
The coil assembly, push rod assembly, O-rings, adapter and body can be removed.

Assembly

<Common to N.C. and N.O.>

1) Mount the components on the body in the reverse order of disassembly.
2) When changing the electrical entry direction, turn the coil assembly in a desired direction to mount it.
3) Push the coil assembly against the body and tighten the screws two or more rounds diagonally (Fig. 2) in the status that there are no gaps between the coil assembly and body (Fig. 1).
Tighten the screws in the order of "1→2→3→4→1→2→3→4".

Proper Tightening Torque (N·m)

VX21	0.5
VX22	0.7
VX23	

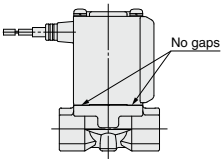

Fig.1

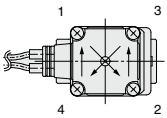

Fig.2

∗ After tightening the screws, make sure that there are no gaps between the coil and body (Fig. 1).
∗ After the disassembly and assembly have been completed, make sure that no leak occurs from the seal. Additionally, when restarting the valve, make sure that the valve operates correctly after checking the safety.

Disassembly/Assembly Procedures

⚠Caution

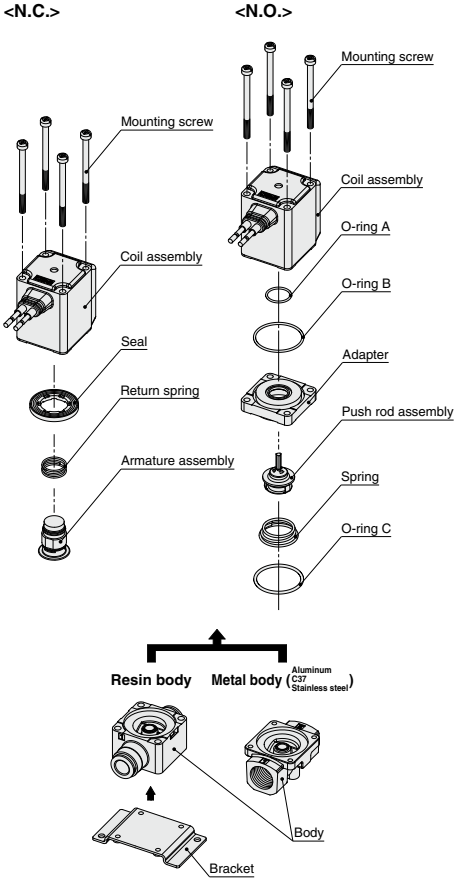

Specific Product Precautions 4

Be sure to read this before handling the products.
Refer to back page 50 for Safety Instructions and pages 17 to 19 for 2 Port Solenoid Valve for Fluid Control Precautions.

Disassembly/Assembly Procedures

⚠Caution

Manifold Exploded View

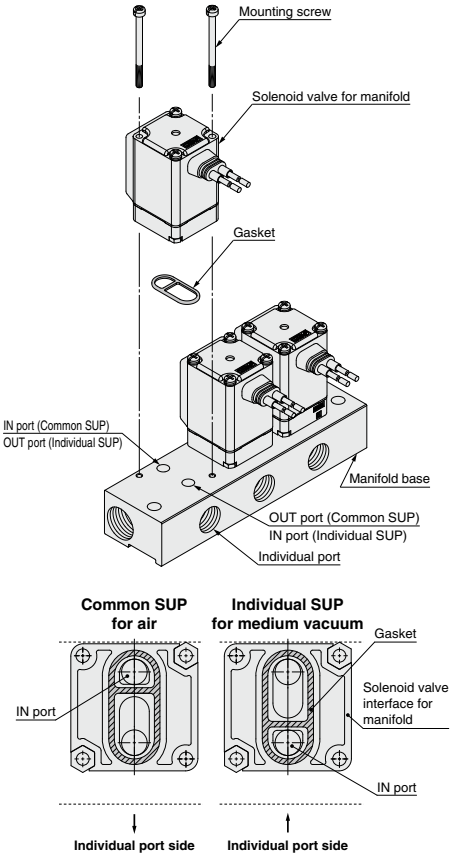

∗ Mounting orientation exists when mounting valves onto manifold base. Mount it as shown above.
∗ Take great care when special electrical entry direction (XC) is used.

Piping

⚠Warning

1. During use, deterioration of the tube or damage to the fittings could cause tubes to come loose from their fittings and thrash about.

To prevent uncontrolled tube movement, install protective covers or fasten tubes securely in place.

2. For piping the tube, fix the product securely using the mounting holes so that the product is not in the air.

⚠Caution

1. Preparation before piping

Before piping is connected, it should be thoroughly blown out with air (flushing) or washed to remove chips, cutting oil and other debris from inside the pipe. Avoid pulling, compressing, or bending the valve body when piping.

2. Avoid connecting ground lines to piping, as this may cause electric corrosion of the system.

3. Always tighten threads with the proper tightening torque.

When using steel piping, tighten with the proper tightening torque shown below.
Lower tightening torque will lead into fluid leakage.

Tightening Torque for Piping

Thread size	Proper tightening torque (N·m)
Rc1/8	7 to 9
Rc1/4	12 to 14
Rc3/8	22 to 24
Rc1/2	28 to 30

4. Connection of piping to products

When connecting piping to a product, avoid mistakes regarding the supply port etc.

5. Winding of sealant tape

When connecting pipes, fittings, etc., be sure that chips from the pipe threads and sealing material do not enter the valve.
Furthermore, when sealant tape is used, leave 1.5 to 2 thread ridges exposed at the end of the threads.

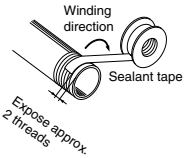

6. In applications such as vacuum and non-leak specifications, use caution specifically against the contamination of foreign objects or airtightness of the fittings.

Specific Product Precautions 5

Be sure to read this before handling the products.
Refer to back page 50 for Safety Instructions and pages 17 to 19 for 2 Port Solenoid Valve for Fluid Control Precautions.

Recommended Piping Conditions

1. When connecting tubes using One-touch fittings, provide some spare tube length shown in Fig. 1, recommended piping configuration.
Also, do not apply external force to the fittings when binding tubes with bands etc. (see Fig. 2.)

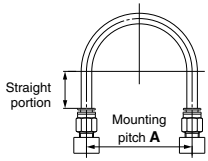

Fig. 1 Recommended piping configuration

Unit: mm

Tube size	Mounting pitch **A**			Straight portion length
	Nylon tubing	Soft nylon tubing	Polyurethane tubing	
ø1/8"	44 or more	29 or more	25 or more	16 or more
ø6	84 or more	39 or more	39 or more	30 or more
ø1/4"	89 or more	56 or more	57 or more	32 or more
ø8	112 or more	58 or more	52 or more	40 or more
ø10	140 or more	70 or more	69 or more	50 or more
ø12	168 or more	82 or more	88 or more	60 or more

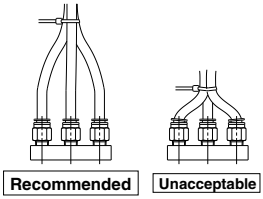

Fig. 2 Binding tubes with bands

Wiring

⚠ Warning

1. The solenoid valve is an electrical product. For safety, install an appropriate fuse and circuit breaker before use.
When using multiple solenoid valves, it is not sufficient to merely install one fuse on the inlet side. In order to ensure the safety of the devices, select and install a fuse for each circuit.

2. Do not apply AC voltage to Class "H" coil AC type unless it is built in full-wave rectifier, or the coil will be damaged.

⚠ Caution

1. As a rule, use electrical wire with a cross sectional area of 0.5 to 1.25 mm^2 for wiring.
Furthermore, do not allow excessive force to be applied to the lines.

2. Use electrical circuits which do not generate chattering in their contacts.

3. Use voltage which is within ±10% of the rated voltage. In cases with a DC power supply where importance is placed on responsiveness, stay within ±5% of the rated value. The voltage drop is the value in the lead wire section connecting the coil.

4. When a surge from the solenoid affects the electrical circuitry, install a surge voltage suppressor etc., in parallel with the solenoid. Or, adopt an option that comes with the surge voltage protection circuit. (However, a surge voltage occurs even if the surge voltage protection circuit is used.)

VX21/22/23 Series
Specific Product Precautions 6

Be sure to read this before handling the products.
Refer to back page 50 for Safety Instructions and pages 17 to 19 for 2 Port Solenoid Valve for Fluid Control Precautions.

Operating Environment

⚠Warning

1. **Be sure to have appropriate protective measures in place when installed in environments where there is the constant presence of water, such as water spray, condensation, high humidity, etc. This product has an IP65 protective construction; however, when used in the above-mentioned environments, liquid may find its way inside the enclosure through microscopic gaps, possibly resulting in the burning out, short-circuiting, or ignition of coils.**
2. **Do not use in an atmosphere having corrosive gases, chemicals, sea water, or where there is direct contact with any of these.**
3. **Do not use in explosive atmospheres.**
4. **Do not use in locations subject to vibration or impact.**
5. **Do not use in locations where radiated heat will be received from nearby heat sources.**
6. **Employ suitable protective in locations where there is contact with oil or welding spatter, etc.**

Maintenance

⚠Warning

1. **Removing the product**
   The valve will reach a high temperature when used with high temperature fluids. Confirm that the valve temperature has dropped sufficiently before performing work. If touched inadvertently, there is a danger of being burned.
   1) Shut off the fluid supply and release the fluid pressure in the system.
   2) Shut off the power supply.
   3) Dismount the product.
2. **Low frequency operation**
   Switch valves at least once every 30 days to prevent malfunction. Also, in order to use it under the optimum state, conduct a regular inspection once a half year.

⚠Caution

1. **Filters and strainers**
   1) Be careful regarding clogging of filters and strainers.
   2) Replace filter elements after one year of use, or earlier if the pressure drop reaches 0.1 MPa.
   3) Clean strainers when the pressure drop reaches 0.1 MPa.
2. **Lubrication**
   When using after lubricating, never forget to lubricate continuously.
3. **Storage**
   In case of long term storage after use, thoroughly remove all moisture to prevent rust and deterioration of rubber materials etc.
4. **Exhaust the drainage from an air filter periodically.**

Operating Precautions

⚠Warning

1. **If there is a possibility of reverse pressure being applied to the valve, take countermeasures such as mounting a check valve on the downstream side of the valve.**
2. **When problems are caused by a water hammer, install water hammer relief equipment (accumulator etc.), or use an SMC water hammer relief valve (VXR series).**

Electrical Connections

⚠Caution

■ Grommet

Class B coil: AWG20 Insulator O.D. 2.6 mm
Class H coil: AWG18 Insulator O.D. 2.1 mm

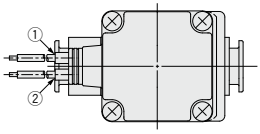

Rated voltage	Lead wire color	
	①	②
DC	Black	Red
100 VAC	Blue	Blue
200 VAC	Red	Red
Other AC	Gray	Gray

∗ There is no polarity.

■ DIN terminal

Disassembly

1. After loosening the binding head screw with flange, then if the housing is pulled in the direction of the arrow, the connector will be removed from the solenoid valve.
2. Pull out the binding head screw with flange from the housing.
3. There is a cutout on the bottom of the terminal block. Insert a small flat head screwdriver, etc. into this cutout, and remove the terminal block from the housing. (See figure below.)
4. Remove the ground nut, and pull out the washer and the rubber seal.

Wiring

1. Pass the cable through the ground nut, washer and rubber seal in this order, and insert these parts into the housing.
2. Loosen the binding head screw of the terminal block, then insert the core wire or the crimped terminal of the lead wire into the terminal, and securely fix it with the binding head screw. The binding head screw of the terminal block is M3.
   Note 1) Tighten the screw to a torque of between 0.5 and 0.6 N·m.
   Note 2) Cable O.D.: ø6 to ø12 mm
   Note 3) For an outside cable diameter of ø9 to 12 mm, remove the internal parts of the rubber seal before using.

Assembly

1. Pass the cable through the ground nut, washer, rubber seal and the housing in this order, and connect to the terminal block. Then, set the terminal block inside the housing. (Push in the terminal block until it snaps into position.)
2. Insert the rubber seal and the washer in this order into the cable entry of the housing, and then tighten the ground nut securely.
3. Insert the gasket between the bottom part of the terminal block and the plug attached to the equipment, and then insert the binding head screw with flange from the top of the housing, and tighten it.
   Note 1) Tighten the screw to a torque of between 0.5 and 0.6 N·m.
   Note 2) The orientation of the connector can be changed in steps of 90° by changing the method of assembling the housing and the terminal block.

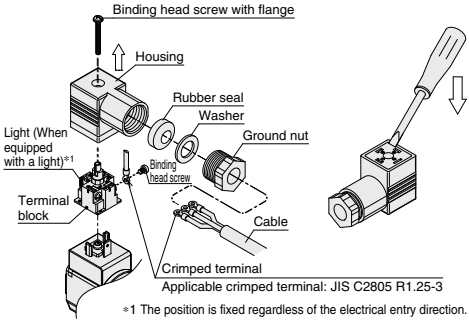

∗1 The position is fixed regardless of the electrical entry direction.

Specific Product Precautions 7

Be sure to read this before handling the products.
Refer to back page 50 for Safety Instructions and pages 17 to 19 for 2 Port Solenoid Valve for Fluid Control Precautions.

Electrical Connections

⚠Caution

Internal connections are as shown below. Make connections to the power supply accordingly.

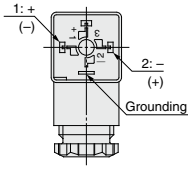

Terminal no.	1	2
DIN terminal	+(–)	–(+)

∗ There is no polarity.

DIN (EN175301-803) Terminal

This DIN terminal corresponds to the Form A DIN connector with an 18 mm terminal pitch, which complies with EN175301-803B.

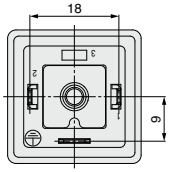

■ **Conduit terminal**

Disassembly

1. Loosen the mounting screw, and remove the terminal cover from the conduit terminal.

Wiring

1. Insert the cable into the conduit terminal.
2. Loosen the screw with UP terminal of the conduit terminal, then insert the core wire or the crimped terminal of the lead wire into the terminal, and securely fix it with the screw with UP terminal.
   Note 1) Tighten the screw to a torque of between 0.5 and 0.6 N·m.

⚠Caution

■ **Conduit terminal**

Assembly

1. Insert the gasket into the conduit terminal, and then clamp the terminal cover with the mounting screw.
   Note 1) Tighten the screw to a torque of between 0.5 and 0.6 N·m.
   Note 2) When changing the orientation of the conduit terminal, carry out the following procedure.
   1. Apply a tool (monkey wrench, spanner, etc.) to the width across flats of the conduit terminal, and turn the terminal in the counterclockwise direction.
   2. Loosen the lock nut.
   3. Turn the conduit terminal in the clamping direction (clockwise direction) to about 15° ahead of the desired position.
   4. Turn the lock nut by hand to the coil side until it is lightly tightened.
   5. Apply a tool to the width across flats of the conduit terminal, and turn it to the desired position (through an angle of about 15°) so as to clamp the conduit terminal.
   Note) When changing the orientation by applying additional tightening force to the conduit terminal from the factory-set position, turn no more than one half a turn.

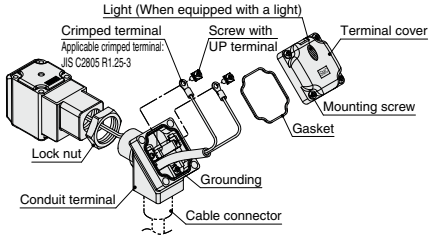

Make connections according to the marks shown below.

- Use the tightening torques below for each section.
- Properly seal the terminal connection (G1/2) with the special wiring conduit etc.

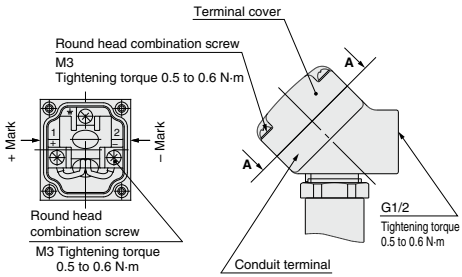

View A-A
(Internal connection diagram)

Specific Product Precautions 8

Be sure to read this before handling the products.
Refer to back page 50 for Safety Instructions and pages 17 to 19 for 2 Port Solenoid Valve for Fluid Control Precautions.

Electrical Connections

⚠ Caution

■ Conduit

When used as an IP65 equivalent, use seal to install the wiring conduit. Also, use the tightening torque below for the conduit.

Class B coil: AWG20 Insulator O.D. 2.5 mm
Class H coil: AWG18 Insulator O.D. 2.1 mm

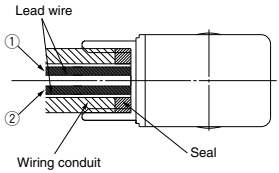

(Bore size G1/2 Tightening torque 0.5 to 0.6 N·m)

Rated voltage	Lead wire color	
	①	②
DC	Black	Red
100 VAC	Blue	Blue
200 VAC	Red	Red
Other AC	Gray	Gray

∗ There is no polarity.

Description	Part no.
Seal	VCW20-15-6

Note) Please order separately.

Electrical Circuits

⚠ Caution

[DC circuit]

Grommet, Flat terminal

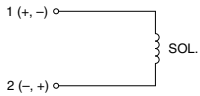

Without electrical option

Grommet, DIN terminal, Conduit terminal, Conduit

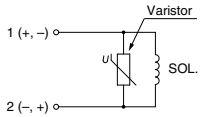

With surge voltage suppressor

DIN terminal, Conduit terminal

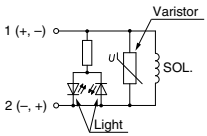

With light/surge voltage suppressor

[AC circuit]

∗ For AC (Class B), the standard product is equipped with surge voltage suppressor.

Grommet, DIN terminal, Conduit terminal, Conduit

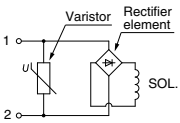

Without electrical option

DIN terminal, Conduit terminal

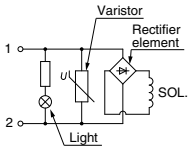

With light/surge voltage suppressor

One-touch Fitting

⚠ Caution

For information on handling One-touch fittings and on appropriate tubing, refer to page 77 and the Fittings & Tubing section of the "Handling Precautions for SMC Products" on the SMC website.