Electric Slide Tables
Series LES/LESH

Step Motor (Servo/24 VDC) Servo Motor (24 VDC)

- **Reduced cycle time**
- **Positioning repeatability: ±0.05 mm**
- **Max. pushing force: 180 N**
  Max. acceleration/deceleration: 5000 mm/s²
  Max. speed: 400 mm/s

Compact Type *Series LES*

Size: 8, 16, 25 ▶Page 305

Compact

Compared with the LESH, **Workpiece mounting surface height: Reduced by up to 12%**

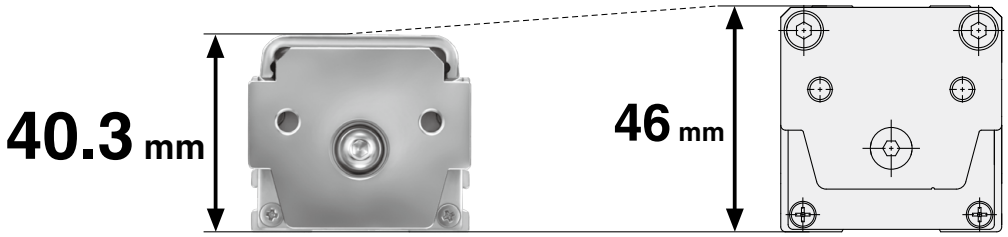

New Compact type **LES16D**

LESH16D

Basic type/R type

Symmetrical type/L type

In-line motor type/D type

High Rigidity Type *Series LESH*

Size: 8, 16, 25 ▶Page 331

High rigidity

Deflection: 0.016 mm*

* LESH16-50 Load: 25 N

Basic type/R type

Series LESH□R

Symmetrical type/L type

Series LESH□L

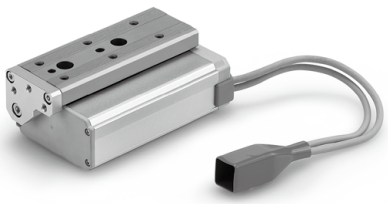

In-line motor type/D type

Series LESH□D

Step Motor (Servo/24 VDC) Servo Motor (24 VDC) **Controller/Driver**

▶Page 538

▶Step data input type

Series LECP6/LECA6

- 64 points positioning
- Input using controller setting kit or teaching box

▶CC-Link direct input type

Series LECPMJ*

* Not applicable to CE.

▶Programless type

Series LECP1

- 14 points positioning
- Control panel setting

▶Pulse input type

Series LECPA

Compact Type *Series LES*

Vertical work load

Increased by up to 50%*

* By reducing weight of the moving parts
* Compared with the LESH16

Model	Vertical work load [kg]
LES16	3.0
LESH16	2.0

Applications

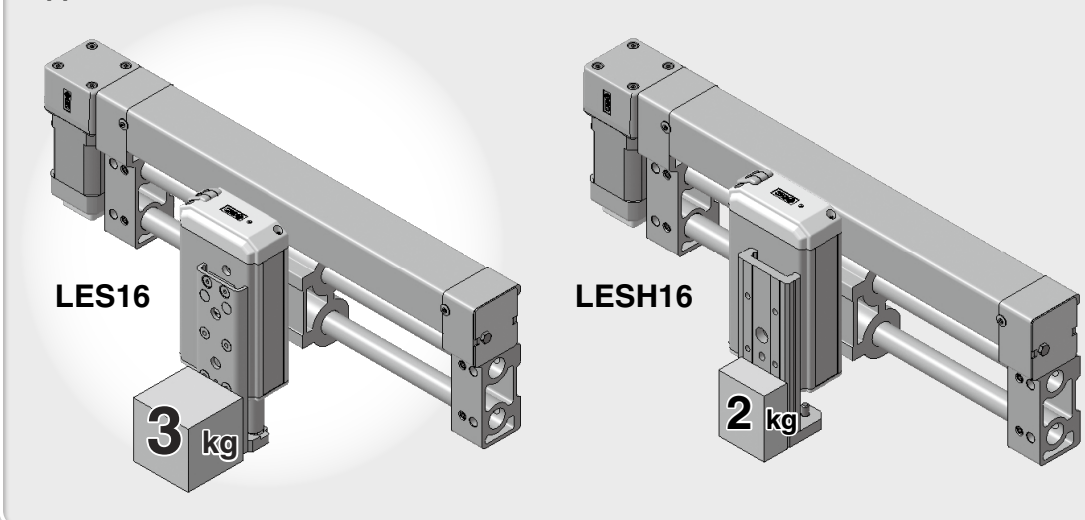

Light weight

Reduced by up to 29%

Model	Weight [kg]	Reduction amount
LES16D-100	1.20	Reduced by 0.50 kg
LESH16D-100	1.70	

- **Max. pushing force: 180 N**
- **Positioning repeatability: ±0.05 mm**
- **Possible to reduce cycle time**
  Max. acceleration/deceleration: 5000 mm/s²
  Max. speed: 400 mm/s
- **2 types of motors selectable: Step motor (Servo/24 VDC), Servo motor (24 VDC)**

Basic type/R type

Series LES□R

Symmetrical type/L type

Series LES□L

In-line motor type/D type

Series LES□D

High Rigidity Type *Series LESH*

High rigidity **Deflection: 0.016 mm*** * LESH16-50 Load: 25 N

Integration of the guide rail and the table Uses a circulating linear guide.

Positioning pin hole
Improved workpiece mounting reproducibility

Body mounting through-hole
Can be mounted from the top.

Workpiece mounting tap

Integration of the guide rail and the table

◎Compact, Space-saving

For LESH8 R/L, 50 mm stroke

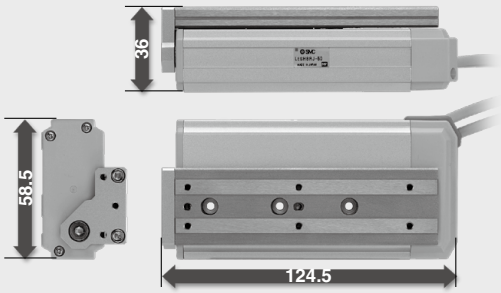

◎Reduced by 61% in volume*

* Compared with the LESH16-50/LXSH-50
* For R/L type

◎Motor integrated into the body Built-in motor

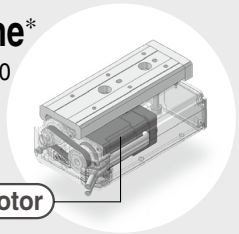

2 types of motors selectable

- **Step motor (Servo/24 VDC)**
  Ideal for transfer of high load at a low speed and pushing operation
- **Servo motor (24 VDC)**
  Stable at high speed and silent operation

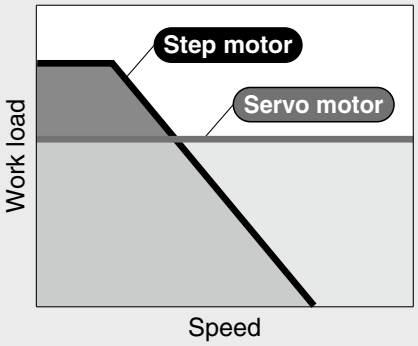

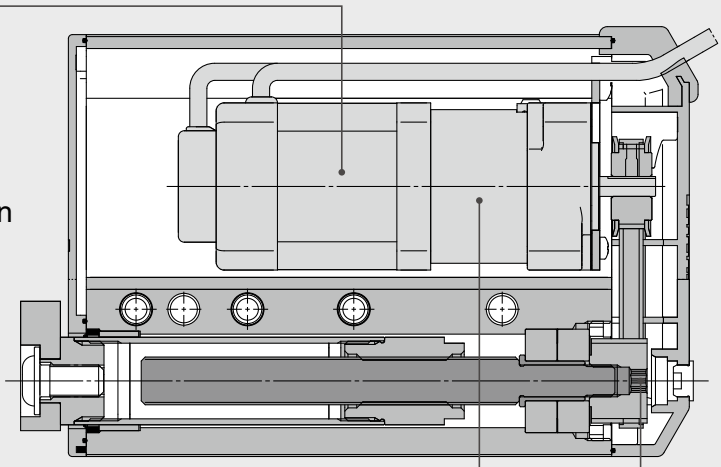

Non-magnetizing lock mechanism (Option)
Prevents workpieces from dropping (holding)

Manual override screw
Adjustment operation possible when power OFF

Application Examples

Positioning of pallets on a conveyer

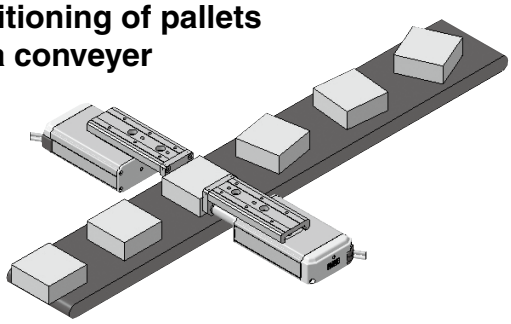

Z motion for pick and place

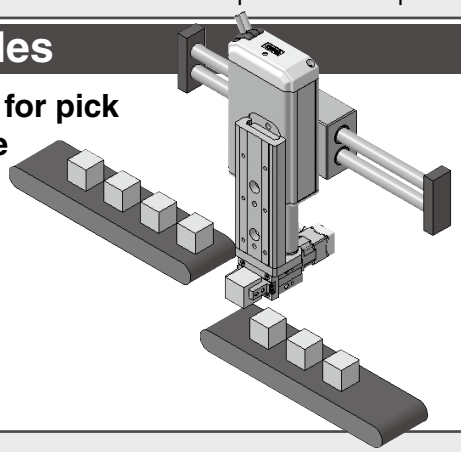

Symmetrical Type/L Type

The locations of the table and cable are opposite those of the basic type (R type), expanding design applications.

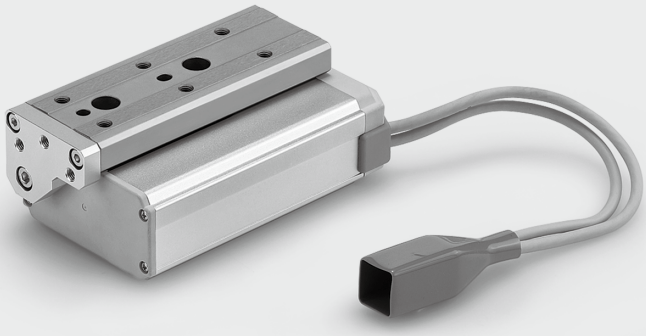

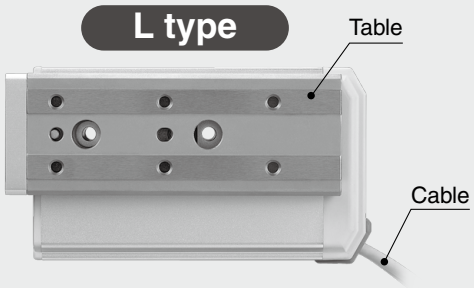

Installation example

When two tables are installed side by side, they will not interfere with each other, allowing for space saving.

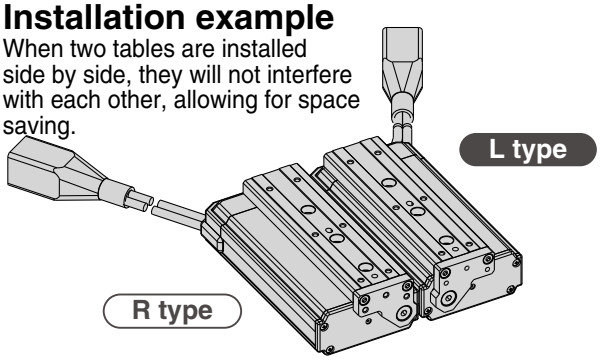

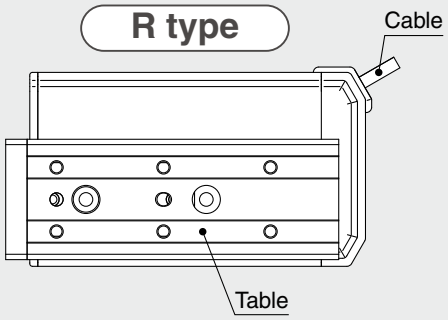

In-line Motor Type/D Type

Width dimension shortened by up to 45%

D type **R type**

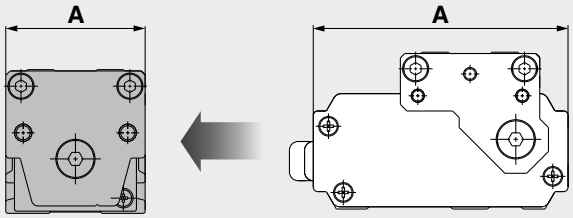

A Dimension [mm]

Size	D type	R/L type
8	**32**	58.5
16	**45**	72.5
25	**61**	106

How to Mount

Through-hole mounting
(R/L/D type)

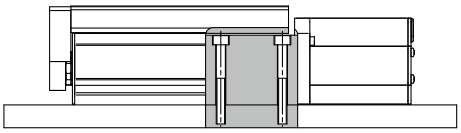

Side holder mounting
(D type)

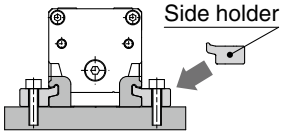

Body tapped mounting
(R/L/D type)

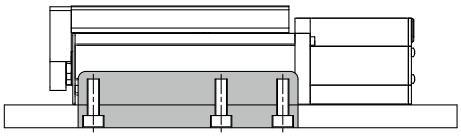

Step Motor (Servo/24 VDC) Servo Motor (24 VDC)

Electric Slide Table/Compact Type *Series LES*

Model Selection ..... Page 305
How to Order ..... Page 315
Specifications ..... Page 317
Construction ..... Page 319
Dimensions ..... Page 321

Step Motor (Servo/24 VDC) Servo Motor (24 VDC)

Electric Slide Table/High Rigidity Type *Series LESH*

Model Selection ..... Page 331
How to Order ..... Page 341
Specifications ..... Page 343
Construction ..... Page 345
Dimensions ..... Page 347

Specific Product Precautions ..... Page 357

Step Motor (Servo/24 VDC)/Servo Motor (24 VDC) Controller

Step Data Input Type/*Series* ***LECP6/LECA6*** ..... Page 551
Controller Setting Kit/***LEC-W2*** ..... Page 560
Teaching Box/***LEC-T1*** ..... Page 561
CC-Link Direct Input Type/*Series* ***LECPMJ*** ..... Page 591
Controller Setting Kit/***LEC-W2*** ..... Page 595
Teaching Box/***LEC-T1*** ..... Page 596
Gateway Unit/*Series* ***LEC-G*** ..... Page 563
Programless Controller/*Series* ***LECP1*** ..... Page 567
Step Motor Driver/*Series* ***LECPA*** ..... Page 581
Controller Setting Kit/***LEC-W2*** ..... Page 588
Teaching Box/***LEC-T1*** ..... Page 589

Slide Tables

Compact Type *Series LES*

Step Motor (Servo/24 VDC)

Servo Motor (24 VDC)

Basic type (R type)

Symmetrical type (L type)

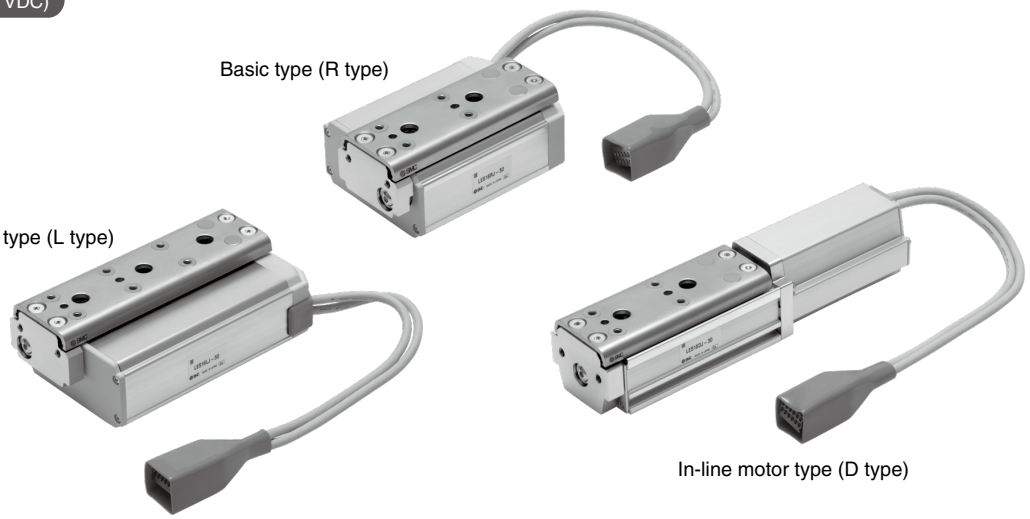

In-line motor type (D type)

High Rigidity Type *Series LESH*

Step Motor (Servo/24 VDC)

Servo Motor (24 VDC)

Basic type (R type)

Symmetrical type (L type)

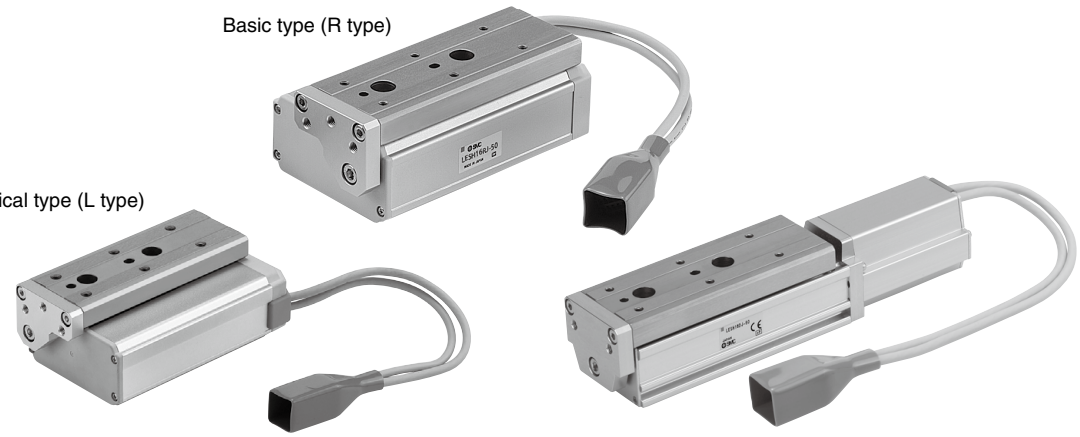

In-line motor type (D type)

Electric Slide Table/Compact Type

Series LES

Model Selection 1

Series LES ▶ Page 315

Selection Procedure

For the high rigidity type LESH series, refer to page 331

Step 1 Check the work load–speed. → **Step 2** Check the cycle time. → **Step 3** Check the allowable moment.

Selection Example

Operating conditions

- Workpiece mass: 1 [kg]
- Speed: 220 [mm/s]
- Mounting orientation: Vertical
- Stroke: 50 [mm]
- Acceleration/Deceleration: 5000 [mm/s²]
- Cycle time: 0.5 seconds
- Workpiece mounting condition:

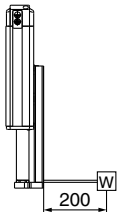

Step 1 **Check the work load–speed. <Speed–Work load graph>** (Page 306)

Select the target model based on the workpiece mass and speed with reference to the <Speed–Work load graph>.

Selection example) The **LES16□J-50** is temporarily selected based on the graph shown on the right side.

LES16□/Step Motor Vertical

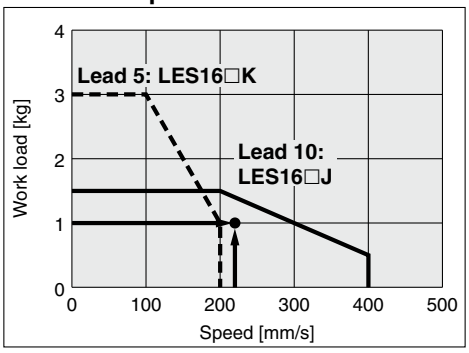

<Speed–Work load graph>

Step 2 **Check the cycle time.**

It is possible to obtain an approximate cycle time by using method 1, but if a more detailed cycle time is required, use method 2.

Method 1: Check the cycle time graph. (Page 307)

Method 2: Calculation <Speed–Work load graph> (Page 306)

Calculate the cycle time using the following calculation method.

Cycle time:

T can be found from the following equation.

$$T = T1 + T2 + T3 + T4 \text{ [s]}$$

- T1: Acceleration time and T3: Deceleration time can be obtained by the following equation.

$$T1 = V/a1 \text{ [s]} \qquad T3 = V/a2 \text{ [s]}$$

- T2: Constant speed time can be found from the following equation.

$$T2 = \frac{L - 0.5 \cdot V \cdot (T1 + T3)}{V} \text{ [s]}$$

- T4: Settling time varies depending on the conditions such as motor types, load and in position of the step data. Therefore, calculate the settling time with reference to the following value.

$T4 = 0.15$ [s]

Calculation example)

T1 to T4 can be calculated as follows.

$T1 = V/a1 = 220/5000 = 0.04$ [s],

$T3 = V/a2 = 220/5000 = 0.04$ [s]

$$T2 = \frac{L - 0.5 \cdot V \cdot (T1 + T3)}{V} = \frac{50 - 0.5 \cdot 220 \cdot (0.04 + 0.04)}{220} = 0.19 \text{ [s]}$$

$T4 = 0.15$ [s]

Therefore, the cycle time can be obtained as follows.

$T = T1 + T2 + T3 + T4$

$= 0.04 + 0.19 + 0.04 + 0.15$

$=$ **0.42 [s]**

LES16□/Step Motor

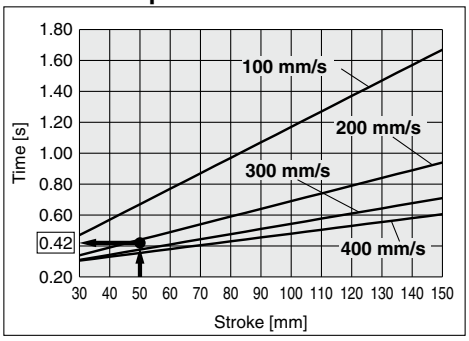

<Cycle time>

Step 3 **Check the allowable moment. <Static allowable moment>** (Page 307) **<Dynamic allowable moment>** (Pages 308, 309)

Confirm the moment that applies to the actuator is within the allowable range for both static and dynamic conditions.

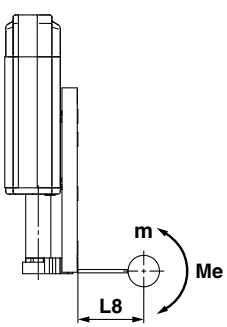

LES16/Pitching

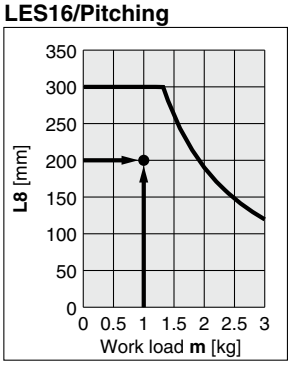

<Dynamic allowable moment>

Based on the above calculation result, the LES16□J-50 is selected.

Speed–Work Load Graph (Guide)

Step Motor (Servo/24 VDC)

∗ The following graph shows the values when moving force is 100%.

LES8□

Horizontal

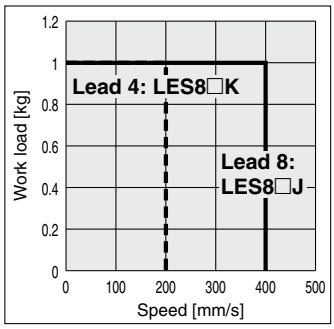

Vertical

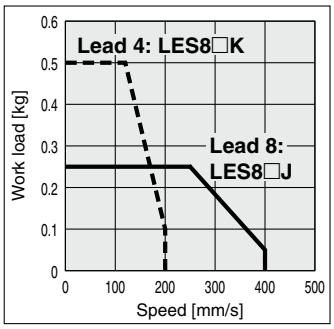

LES16□

Horizontal

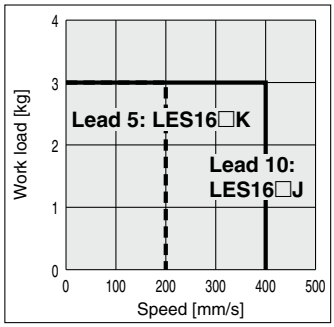

Vertical

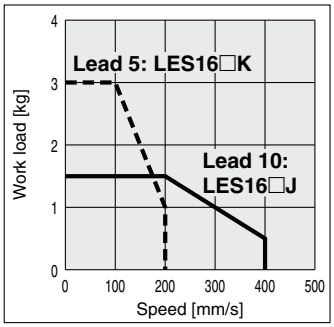

LES25□

Horizontal

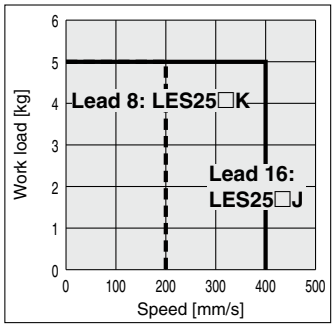

Vertical

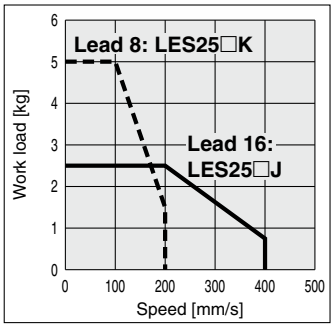

Servo Motor (24 VDC)

∗ The following graph shows the values when moving force is 250%.

LES8□A

Horizontal

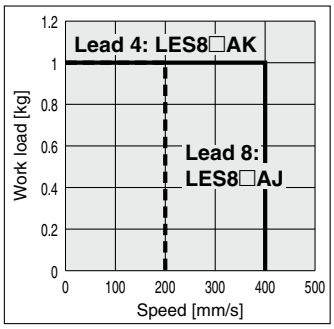

Vertical

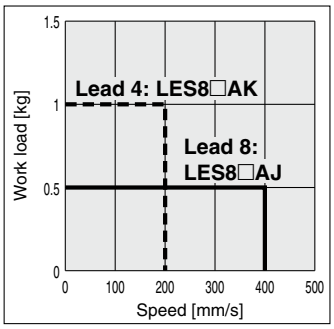

LES16□A

Horizontal

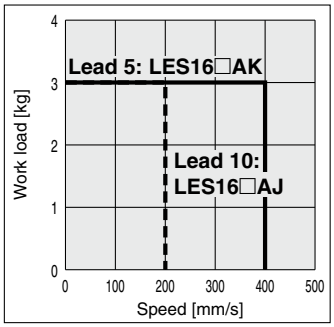

Vertical

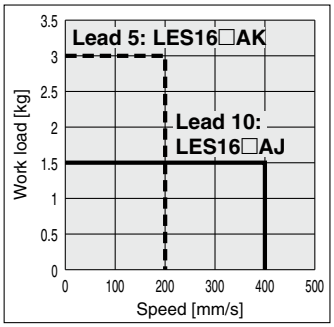

LES25$^{R}_{L}$A

Horizontal

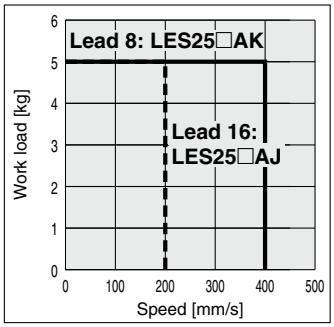

Vertical

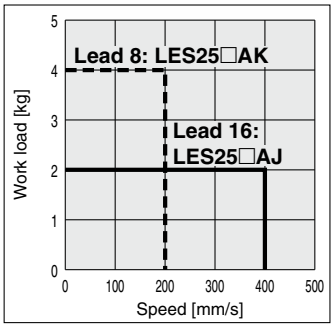

Cycle Time (Guide)

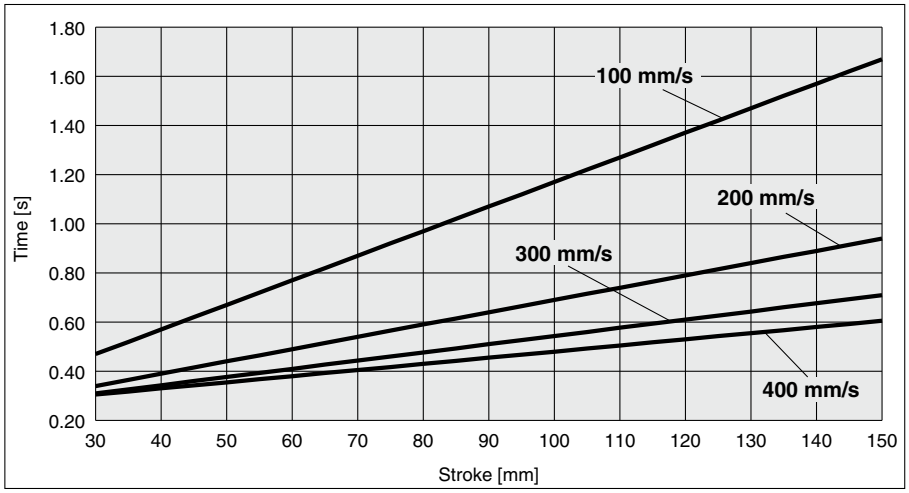

Operating Conditions
Acceleration/Deceleration: 5000 mm/s^2
In position: 0.5 mm

Static Allowable Moment

Model		LES8	LES16	LES25
Pitching	[N·m]	2	4.8	14.1
Yawing	[N·m]	2	4.8	14.1
Rolling	[N·m]	0.8	1.8	4.8

Dynamic Allowable Moment

∗ This graph shows the amount of allowable overhang (guide unit) when the center of gravity of the workpiece overhangs in one direction. When selecting the overhang, refer to "Calculation of Guide Load Factor" or the Electric Actuator Selection Software for confirmation, http://www.smcworld.com

Acceleration/Deceleration —— 5000 mm/s²

Orientation	Load overhanging direction **m** : Work load [kg] **Me**: Dynamic allowable moment [N·m] **L** : Overhang to the work load center of gravity [mm]		Model LES8	Model LES16	Model LES25
Horizontal/Bottom	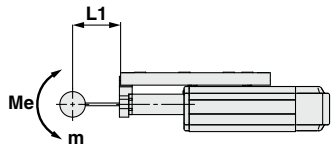	X	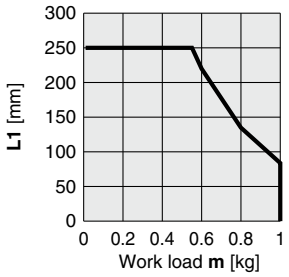	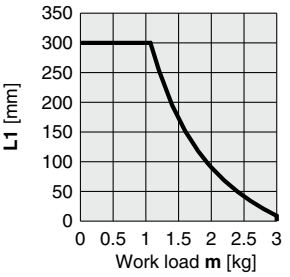	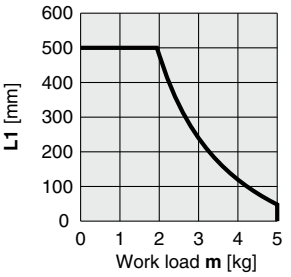
	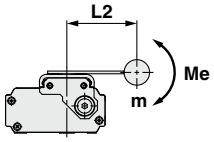	Y	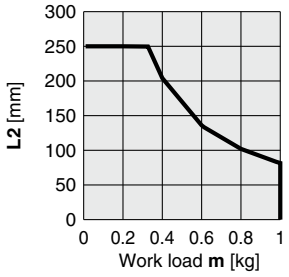	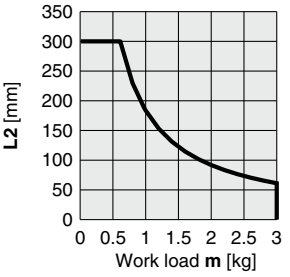	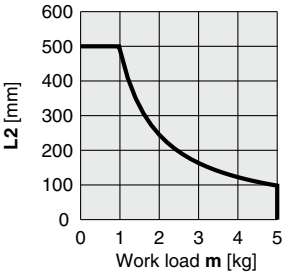
	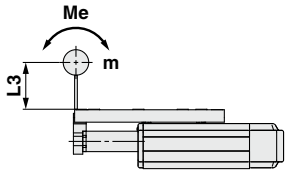	Z	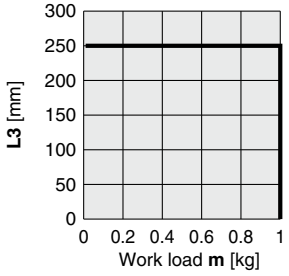	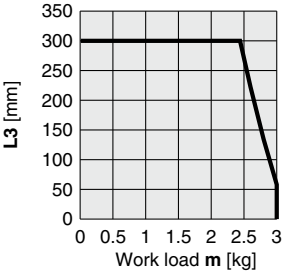	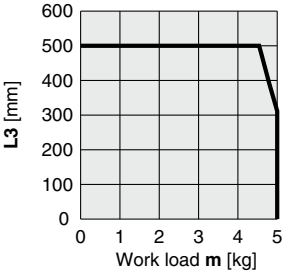
Wall	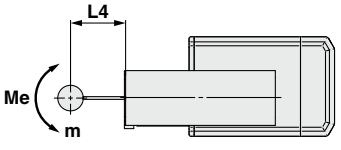	X	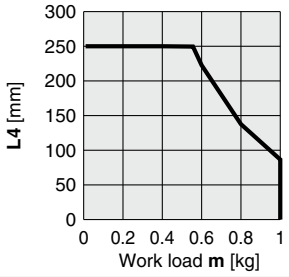	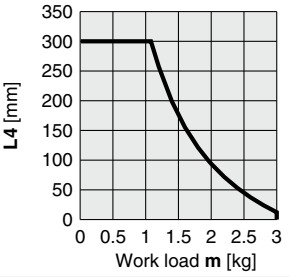	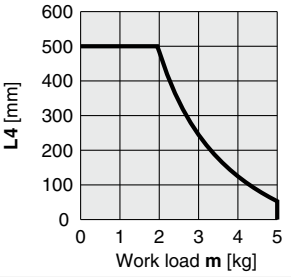
	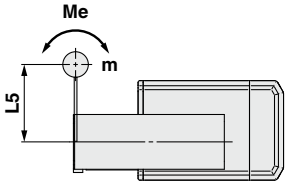	Y	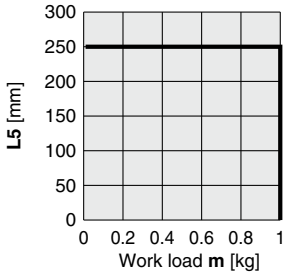	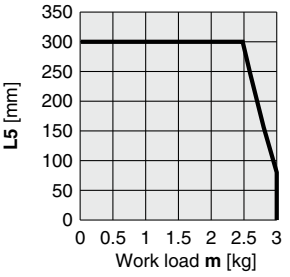	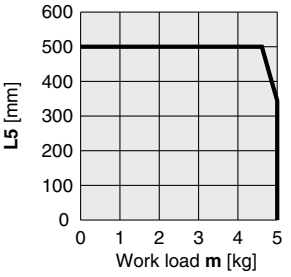
	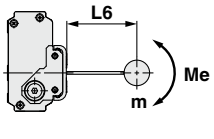	Z	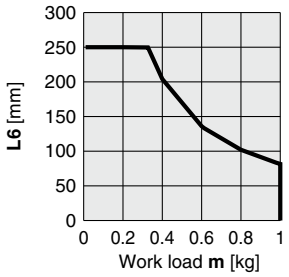	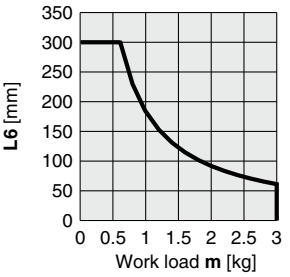	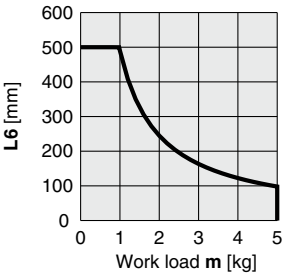

Dynamic Allowable Moment

∗ This graph shows the amount of allowable overhang (guide unit) when the center of gravity of the workpiece overhangs in one direction. When selecting the overhang, refer to "Calculation of Guide Load Factor" or the Electric Actuator Selection Software for confirmation, http://www.smcworld.com

Acceleration/Deceleration —— 5000 mm/s²

Orientation	Load overhanging direction **m** : Work load [kg] **Me**: Dynamic allowable moment [N·m] **L** : Overhang to the work load center of gravity [mm]		Model: LES8	Model: LES16	Model: LES25
Vertical	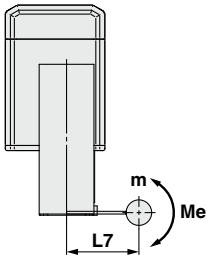	Y	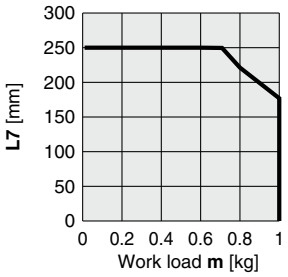	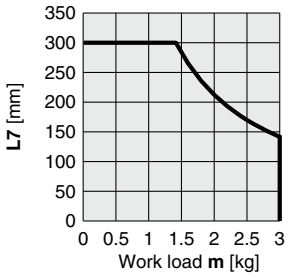	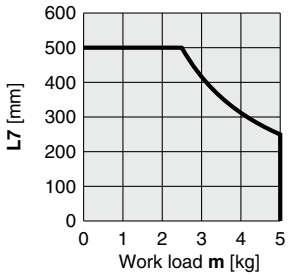
	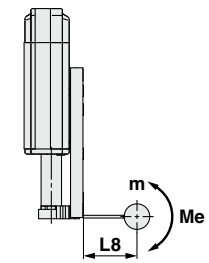	Z	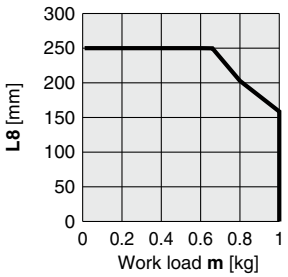	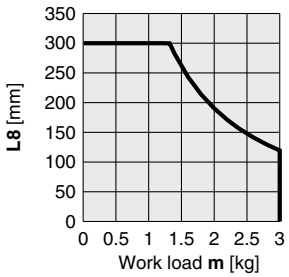	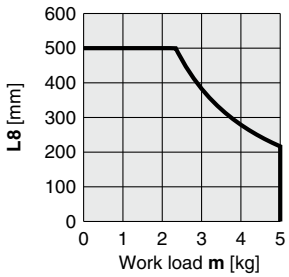

Calculation of Guide Load Factor

1. Decide operating conditions.
   Model: LES
   Size: 8/16/25
   Mounting orientation: Horizontal/Bottom/Wall/Vertical
   Acceleration [mm/s²]: **a**
   Work load [kg]: **m**
   Work load center position [mm]: **Xc/Yc/Zc**
2. Select the target graph with reference to the model, size and mounting orientation.
3. Based on the acceleration and work load, obtain the overhang [mm]: **Lx/Ly/Lz** from the graph.
4. Calculate the load factor for each direction.
   α**x = Xc/Lx**, α**y = Yc/Ly**, α**z = Zc/Lz**
5. Confirm the total of α**x**, α**y** and α**z** is 1 or less.
   α**x + αy + αz ≤ 1**
   When 1 is exceeded, please consider a reduction of acceleration and work load, or a change of the work load center position and series.

Mounting orientation

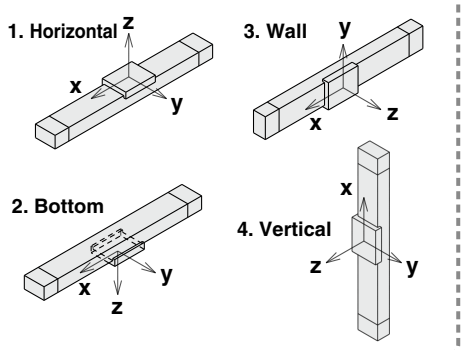

Example

1. Operating conditions
   Model: LES
   Size: 8
   Mounting orientation: Horizontal
   Acceleration [mm/s²]: 5000
   Work load [kg]: 0.6
   Work load center position [mm]: **Xc = 50**, **Yc = 30**, **Zc = 60**
2. Select three graphs from the top of the left side first row on page 308.
3. **Lx = 220 mm**, **Ly = 135 mm**, **Lz = 250 mm**
4. The load factor for each direction can be obtained as follows.
   α**x = 50/220 = 0.23**
   α**y = 30/135 = 0.22**
   α**z = 60/250 = 0.24**
5. α**x + αy + αz = 0.69 ≤ 1**

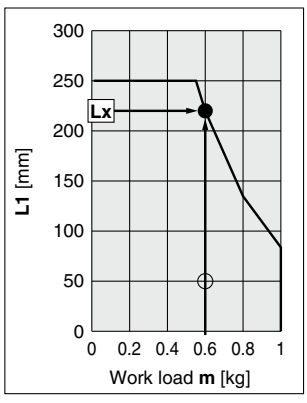

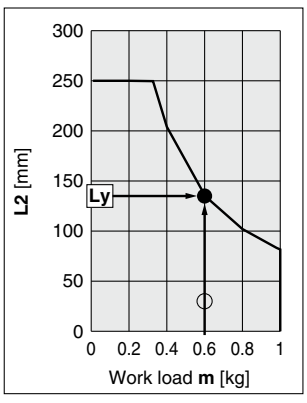

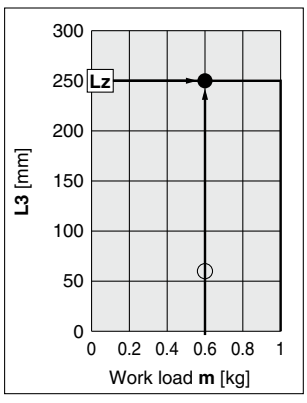

Step Motor (Servo/24 VDC) Servo Motor (24 VDC)

Electric Slide Table/Compact Type

Series LES

Model Selection 2

Series LES ▶ Page 315

Selection Procedure

For the high rigidity type LESH series, refer to page 337.

Step 1 Check the required force. → **Step 2** Check the set value of pushing force. → **Step 3** Check the duty ratio.

Selection Example

Operating conditions

- Pushing force: 90 [N]
- Workpiece mass: 1 [kg]
- Speed: 100 [mm/s]
- Stroke: 100 [mm]
- Mounting orientation: Vertical upward
- Pushing time + Operation (A): 1.5 seconds
- All cycle time (B): 6 seconds

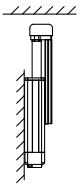

Step 1 Check the required force.

Calculate the approximate required force for pushing operation.

Selection example) ●Pushing force: 90 [N]
●Workpiece mass: 1 [kg]
Therefore, the approximate required force can be obtained as 90 + 10 = 100 [N].

Select the target model based on the approximate required force with reference to the specifications (Pages 317 and 318).

Selection example) Based on the specifications,
●Approximate required force: 100 [N]
●Speed: 100 [mm/s]
Therefore, the **LES25□** is temporarily selected.

Then, calculate the required force for pushing operation.

If the mounting position is vertical upward, add the actuator table weight.

Selection example) Based on the <Table weight>,
●**LES25□** table weight: 0.5 [kg]
Therefore, the required force can be obtained as 100 + 5 = 105 [N].

Step 2 Check the set value of pushing force.

<Set value of pushing force–Force graph> (Page 312)

Select the target model based on the required force with reference to the <Set value of pushing force–Force graph>, and confirm the set value of pushing force.

Selection example) Based on the graph shown on the right side,
●Required force: 105 [N]
Therefore, the **LES25□K** is temporarily selected.
This set value of pushing force is 40 [%].

Step 3 Check the duty ratio.

Confirm the allowable duty ratio based on the set value of pushing force with reference to the <Allowable duty ratio>.

Selection example) Based on the <Allowable duty ratio>,
●Set value of pushing force: 40 [%]
Therefore, the allowable duty ratio can be obtained as 30 [%].

Calculate the duty ratio for operating conditions, and confirm it does not exceed the allowable duty ratio.

Selection example) ●Pushing time + Operation (A): 1.5 seconds
●All cycle time (B): 6 seconds
Therefore, the duty ratio can be obtained as 1.5/6 x 100 = 25 [%], and this is the allowable range.

Based on the above calculation result, the LES25□K-100 is selected.

For allowable moment, the selection procedure is the same as the positioning control.

Table Weight [kg]

Model	Stroke [mm]					
	30	50	75	100	125	150
LES8	0.06	0.08	0.10	—	—	—
LES16	0.10	0.13	0.18	0.20	—	—
LES25	0.25	0.30	0.36	0.50	0.55	0.59

∗ If the mounting position is vertical upward, add the table weight.

LES25□/Step Motor

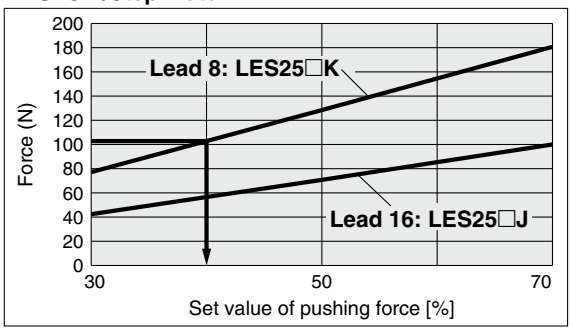

<Set value of pushing force–Force graph>

Allowable Duty Ratio

Step Motor (Servo/24 VDC)

Set value of pushing force (%)	Duty ratio (%)	Continuous pushing time (minute)
30	—	—
50 or less	30 or less	5 or less
70 or less	20 or less	3 or less

Servo Motor (24 VDC)

Set value of pushing force (%)	Duty ratio (%)	Continuous pushing time (minute)
50	—	—
75 or less	30 or less	5 or less
100 or less	20 or less	3 or less

∗ The pushing force of the LES8□A is up to 75%.

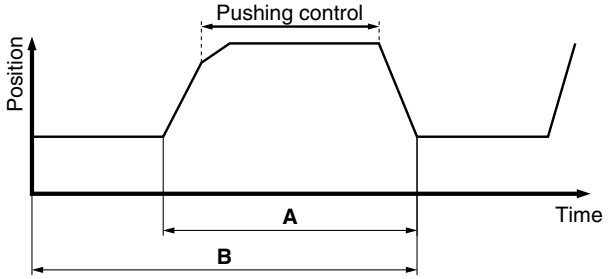

SMC

Set Value of Pushing Force–Force Gragh

Step Motor (Servo/24 VDC)

LES8□

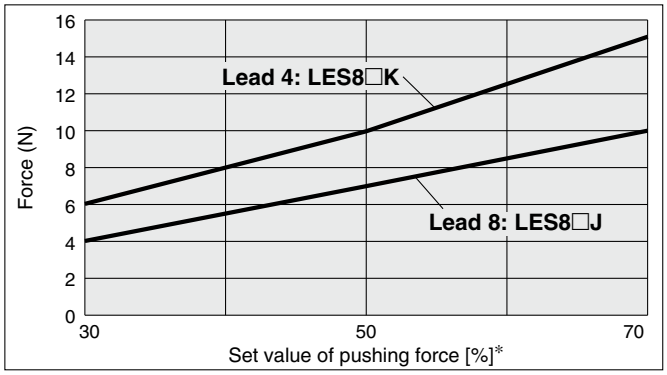

LES16□

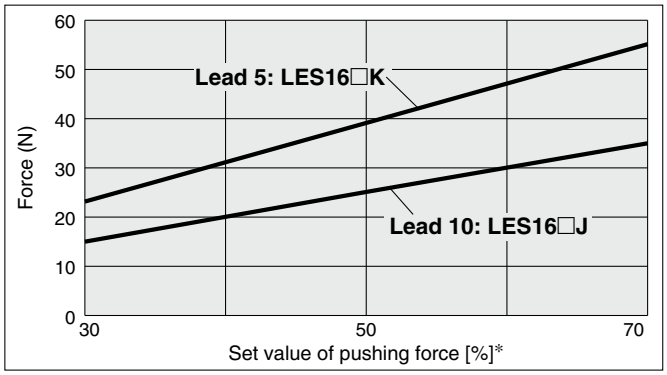

LES25□

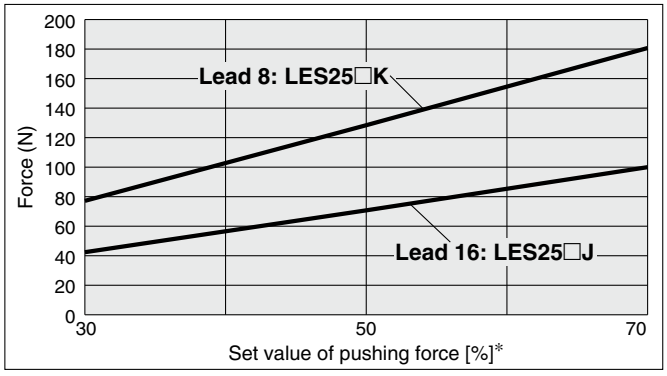

Servo Motor (24 VDC)

LES8□A

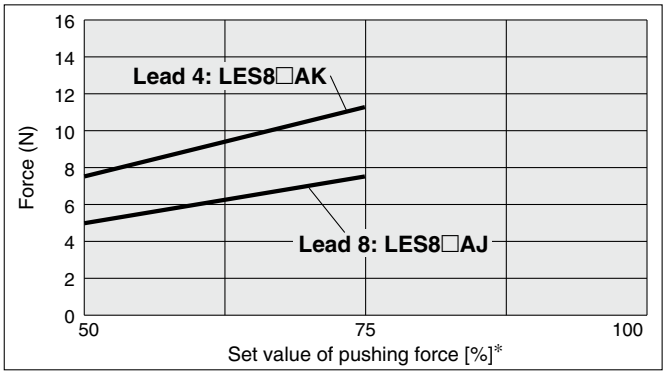

LES16□A

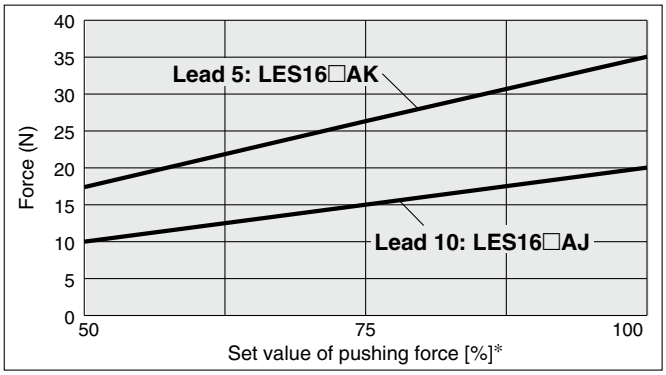

LES25$^{R}_{L}$A

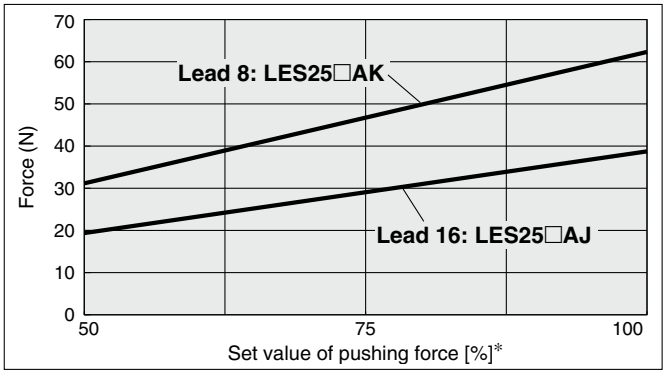

∗ Set values for the controller.

Table Accuracy

∗ These values are initial guideline values.

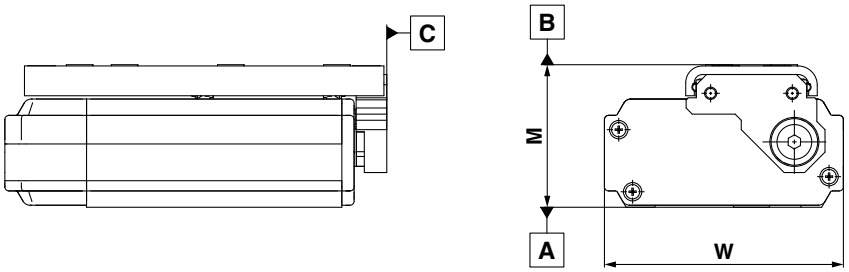

Model	LES8	LES16	LES25
B side parallelism to A side	0.4 mm		
B side traveling parallelism to A side	Refer to Graph 1.		
C side perpendicularity to A side	0.2 mm		
M dimension tolerance	±0.3 mm		
W dimension tolerance	±0.2 mm		

Graph 1 B side traveling parallelism to A side

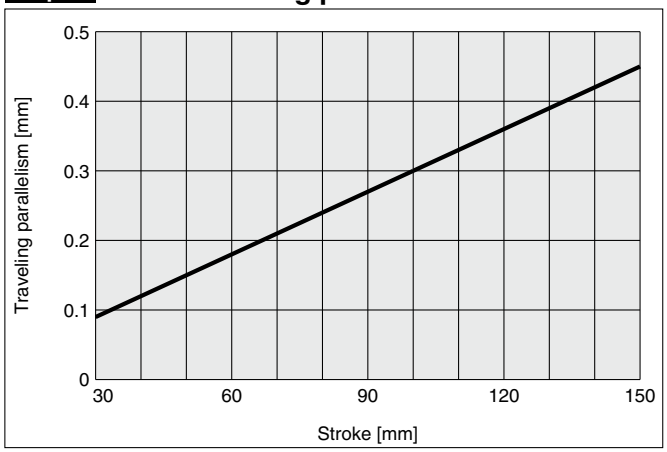

Traveling parallelism:
The amount of deflection on a dial gauge when the table travels a full stroke with the body secured on a reference base surface

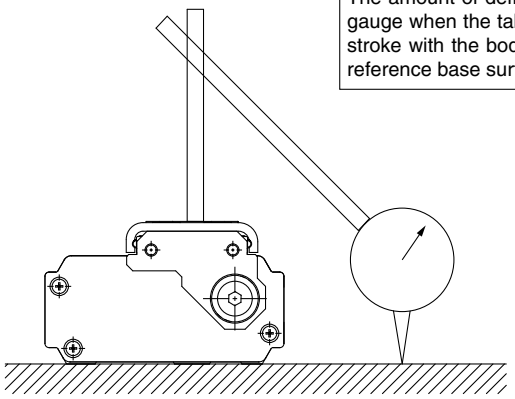

Table Deflection (Reference Value)

∗ These values are initial guideline values.

Pitching moment

Table displacement due to pitch moment load
Table displacement when loads are applied to the section marked with the arrow with the slide table stuck out.

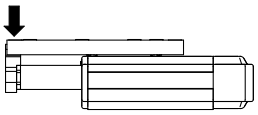

Yawing moment

Table displacement due to yaw moment load
Table displacement when loads are applied to the section marked with the arrow with the slide table stuck out.

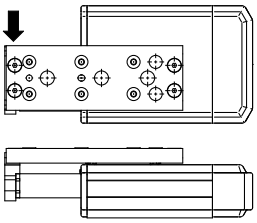

Rolling moment

Table displacement due to roll moment load
Table displacement of section A when loads are applied to the section F with the slide table retracted.

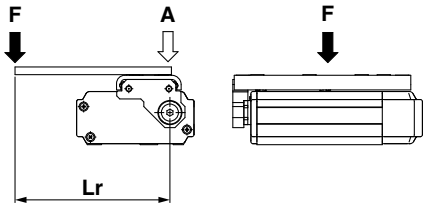

LES8

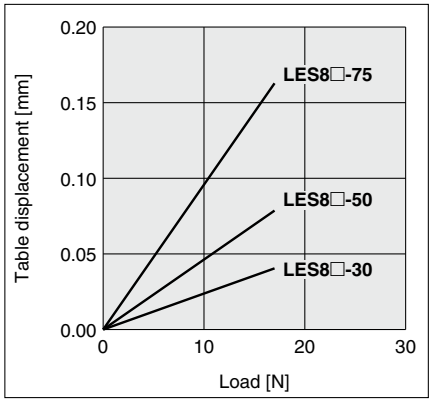

LES8

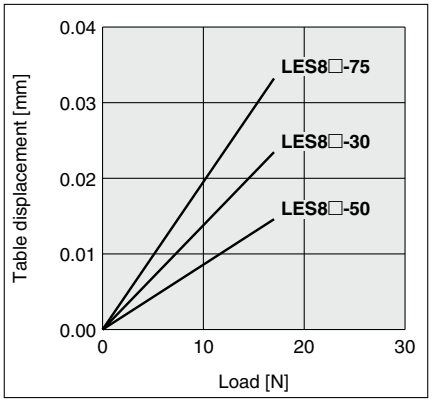

LES8 **Lr** = 80 mm

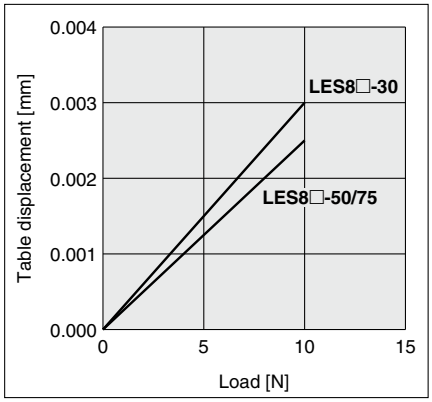

LES16

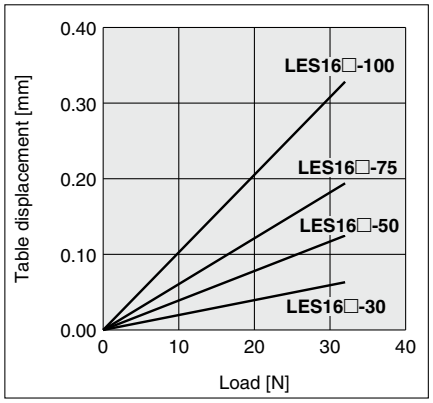

LES16

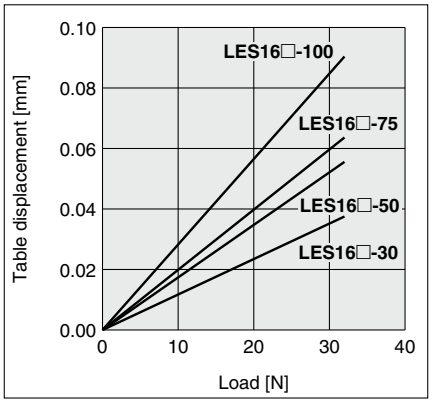

LES16 **Lr** = 60 mm

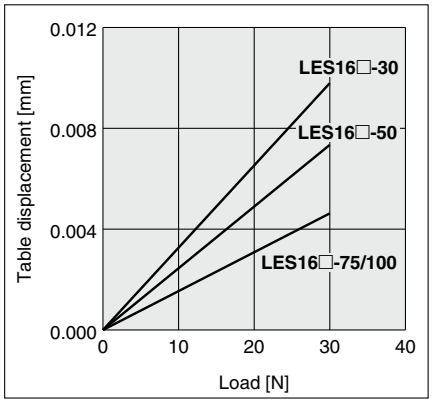

LES25

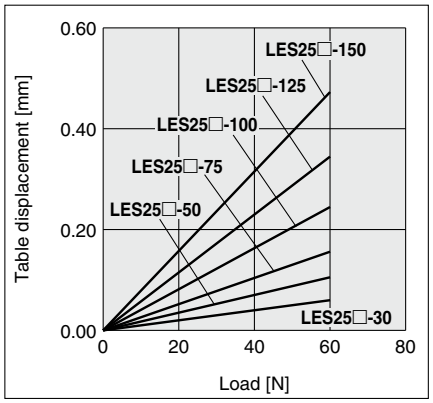

LES25

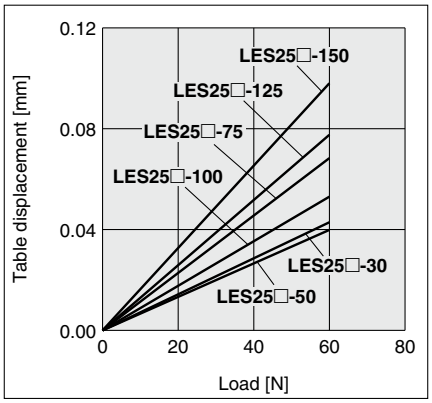

LES25 **Lr** = 100 mm

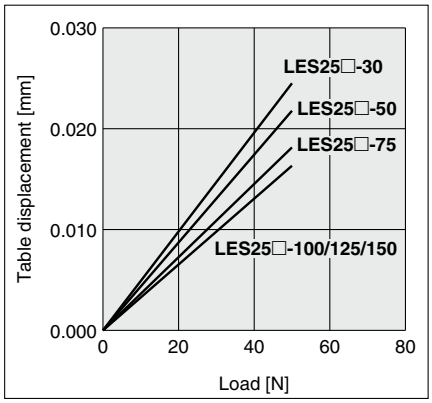

Step Motor (Servo/24 VDC) Servo Motor (24 VDC)

Electric Slide Table/ Compact Type

Series LES LES8, 16, 25

RoHS

How to Order

LES 8 R □ J - 30 □ □ □ - S 1 6N 1 □

❶ ❷ ❸ ❹ ❺ ❻ ❼ ❽ ❾ ❿ ⓫ ⓬ ⓭

❶ Size

8
16
25

❷ Motor mounting position

R	**Basic type/R type** 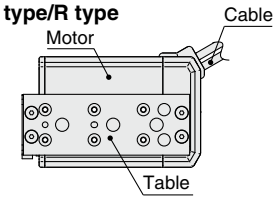
L	**Symmetrical type/L type** 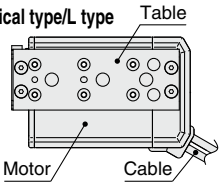
D	**In-line motor type/D type** 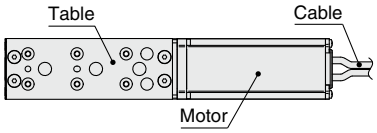

❸ Motor type

Symbol	Type	Compatible controller/ driver
Nil	Step motor (Servo/24 VDC)	LECP6 LECP1 LECPA LECPMJ
A	Servo motor* (24 VDC)	LECA6

* LES25DA is not available.

⚠Caution

[CE-compliant products]

① EMC compliance was tested by combining the electric actuator LES series and the controller LEC series.
The EMC depends on the configuration of the customer's control panel and the relationship with other electrical equipment and wiring. Therefore, conformity to the EMC directive cannot be certified for SMC components incorporated into the customer's equipment under actual operating conditions. As a result, it is necessary for the customer to verify conformity to the EMC directive for the machinery and equipment as a whole.

② For the servo motor (24 VDC) specification, EMC compliance was tested by installing a noise filter set (LEC-NFA).
Refer to page 559 for the noise filter set.
Refer to the LECA Operation Manual for installation.

③ CC-Link direct input type (LECPMJ) is not CE-compliant.

[UL-compliant products]

When conformity to UL is required, the electric actuator and controller/driver should be used with a UL1310 Class 2 power supply.

❹ Lead [mm]

Symbol	LES8	LES16	LES25
J	8	10	16
K	4	5	8

❺ Stroke [mm]

Model \ Stroke	30	50	75	100	125	150
LES8	●*	●*	●	—	—	—
LES16	●*	●*	●	●	—	—
LES25	●*	●	●	●	●	●

* R/L type with lock is not available.

❻ Motor option

Nil	Without option
B	With lock

❼ Body option

Nil	Without option
S	Dust-protected*

* For R/L type (IP5X equivalent), a scraper is mounted on the rod cover, and gaskets are mounted on both the end covers. For D type, a scraper is mounted on the rod cover.

The actuator and controller/driver are sold as a package.

Confirm that the combination of the controller/driver and the actuator is correct.

<Check the following before use.>

① Check the actuator label for model number. This matches the controller/driver.
② Check Parallel I/O configuration matches (NPN or PNP).

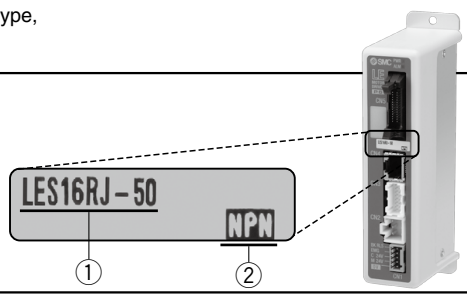

* Refer to the operation manual for using the products. Please download it via our website, http://www.smcworld.com

Basic type (R type)

Symmetrical type (L type)

In-line motor type (D type)

❽ Mounting*

Symbol	Mounting	R type L type	D type
Nil	Without side holder	●	●
H	With side holder (4 pcs.)	—	●

* Refer to page 330 for details.

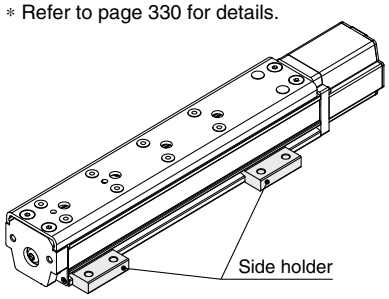

❾ Actuator cable type*1

Nil	Without cable
S	Standard cable*2
R	Robotic cable (Flexible cable)*3

*1 The standard cable should be used on fixed parts. For using on moving parts, select the robotic cable.
*2 Only available for the motor type "Step motor."
*3 Fix the motor cable protruding from the actuator to keep it unmovable. For details about fixing method, refer to Wiring/Cables in the Electric Actuators Precautions.

❿ Actuator cable length [m]

Nil	Without cable
1	1.5
3	3
5	5
8	8*
A	10*
B	15*
C	20*

* Produced upon receipt of order (Robotic cable only) Refer to the specifications Note 3) on page 317.

⓫ Controller/Driver type*1

Nil	Without controller/driver	
6N	**LECP6/LECA6** (Step data input type)	NPN
6P		PNP
1N	**LECP1***2 (Programless type)	NPN
1P		PNP
MJ	**LECPMJ***2 *3 (CC-Link direct input type)	—
AN	**LECPA***2 *4 (Pulse input type)	NPN
AP		PNP

*1 For details about controller/driver and compatible motor, refer to the compatible controller/driver below.
*2 Only available for the motor type "Step motor."
*3 Not applicable to CE.
*4 When pulse signals are open collector, order the current limiting resistor (LEC-PA-R-□) on page 587 separately.

⓬ I/O cable length*1, Communication plug

Nil	Without cable (Without communication plug connector)*3
1	1.5 m
3	3 m*2
5	5 m*2
S	Straight type communication plug connector*3
T	T-branch type communication plug connector*3

*1 When "Without controller/driver" is selected for controller/driver types, I/O cable cannot be selected. Refer to page 559 (For LECP6/LECA6), page 573 (For LECP1) or page 587 (For LECPA) if I/O cable is required.
*2 When "Pulse input type" is selected for controller/driver types, pulse input usable only with differential. Only 1.5 m cables usable with open collector.
*3 For the LECPMJ, only "Nil", "S" and "T" are selectable since I/O cable is not included.

⓭ Controller/Driver mounting

Nil	Screw mounting
D	DIN rail mounting*

* DIN rail is not included. Order it separately.

Compatible Controller/Driver

Type	Step data input type	Step data input type	CC-Link direct input type	Programless type	Pulse input type
Series	**LECP6**	**LECA6**	**LECPMJ**	**LECP1**	**LECPA**
Features	Value (Step data) input Standard controller		CC-Link direct input	Capable of setting up operation (step data) without using a PC or teaching box	Operation by pulse signals
Compatible motor	Step motor (Servo/24 VDC)	Servo motor (24 VDC)	Step motor (Servo/24 VDC)		
Maximum number of step data	64 points			14 points	—
Power supply voltage	24 VDC				
Reference page	Page 551	Page 551	Page 591	Page 567	Page 581

Specifications

Step Motor (Servo/24 VDC)

Model			LES8□		LES16□		LES25□	
Actuator specifications	Stroke [mm]		30, 50, 75		30, 50, 75, 100		30, 50, 75, 100, 125, 150	
	Work load [kg] Note 1)	Horizontal	1		3		5	
		Vertical	0.5	0.25	3	1.5	5	2.5
	Pushing force 30 to 70 % [N] Note 2) 3)		6 to 15	4 to 10	23.5 to 55	15 to 35	77 to 180	43 to 100
	Speed [mm/s] Note 1) 3)		10 to 200	20 to 400	10 to 200	20 to 400	10 to 200	20 to 400
	Pushing speed [mm/s]		10 to 20	20	10 to 20	20	10 to 20	20
	Max. acceleration/deceleration [mm/s²]		5000					
	Positioning repeatability [mm]		±0.05					
	Lost motion [mm] Note 4)		0.3 or less					
	Screw lead [mm]		4	8	5	10	8	16
	Impact/Vibration resistance [m/s²] Note 5)		50/20					
	Actuation type		Slide screw + Belt (R/L type), Slide screw (D type)					
	Guide type		Linear guide (Circulating type)					
	Operating temperature range [°C]		5 to 40					
	Operating humidity range [%RH]		90 or less (No condensation)					
Electric specifications	Motor size		□20		□28		□42	
	Motor type		Step motor (Servo/24 VDC)					
	Encoder		Incremental A/B phase (800 pulse/rotation)					
	Rated voltage [V]		24 VDC ±10%					
	Power consumption [W] Note 6)		18		69		45	
	Standby power consumption when operating [W] Note 7)		7		15		13	
	Max. instantaneous power consumption [W] Note 8)		35		69		67	
Lock unit specifications	Type	Note 9)	Non-magnetizing lock					
	Holding force [N]	Note 9)	24	2.5	300	48	500	77
	Power consumption [W] Note 10)	Note 9)	4		3.6		5	
	Rated voltage [V]	Note 9)	24 VDC ±10%					

Note 1) Speed changes according to the work load. Check “Speed–Work Load Graph (Guide)” on page 306.
Note 2) Pushing force accuracy is ±20% (F.S.).
Note 3) The speed and force may change depending on the cable length, load and mounting conditions. Furthermore, if the cable length exceeds 5 m, then it will decrease by up to 10% for each 5 m. (At 15 m: Reduced by up to 20%)
Note 4) A reference value for correcting an error in reciprocal operation.
Note 5) Vibration resistance: No malfunction occurred in a test ranging between 45 to 2000 Hz. Test was performed in both an axial direction and a perpendicular direction to the lead screw. (Test was performed with the actuator in the initial state.)
Impact resistance: No malfunction occurred when the actuator was tested with a drop tester in both an axial direction and a perpendicular direction to the lead screw. (Test was performed with the actuator in the initial state.)
Note 6) The power consumption (including the controller) is for when the actuator is operating.
Note 7) The standby power consumption when operating (including the controller) is for when the actuator is stopped in the set position during the operation. Except during the pushing operation.
Note 8) The maximum instantaneous power consumption (including the controller) is for when the actuator is operating. This value can be used for the selection of the power supply.
Note 9) With lock only
Note 10) For an actuator with lock, add the power consumption for the lock.

Specifications

Servo Motor (24 VDC)

Model			LES8□A		LES16□A		LES25$^{R}_{L}$A Note 1)	
Actuator specifications	Stroke [mm]		30, 50, 75		30, 50, 75, 100		30, 50, 75, 100, 125, 150	
	Work load [kg]	Horizontal	1		3		5	
		Vertical	1	0.5	3	1.5	4	2
	Pushing force 50 to 100% [N] Note 2)		7.5 to 11	5 to 7.5	17.5 to 35	10 to 20	31 to 62	19 to 38
	Speed [mm/s]		1 to 200	1 to 400	1 to 200	1 to 400	1 to 200	1 to 400
	Pushing speed [mm/s]		1 to 20					
	Max. acceleration/deceleration [mm/s^2]		5000					
	Positioning repeatability [mm]		±0.05					
	Lost motion [mm] Note 3)		0.3 or less					
	Screw lead [mm]		4	8	5	10	8	16
	Impact/Vibration resistance [m/s^2] Note 4)		50/20					
	Actuation type		Slide screw + Belt (R/L type), Slide screw (D type)					
	Guide type		Linear guide (Circulating type)					
	Operating temperature range [°C]		5 to 40					
	Operating humidity range [%RH]		90 or less (No condensation)					
Electric specifications	Motor size		□20		□28		□42	
	Motor output [W]		10		30		36	
	Motor type		Servo motor (24 VDC)					
	Encoder (Angular displacement sensor)		Incremental A/B/Z phase (800 pulse/rotation)					
	Rated voltage [V]		24 VDC ±10%					
	Power consumption [W] Note 5)		42		68		97	
	Standby power consumption when operating [W] Note 6)		8 (Horizontal)/19 (Vertical)		9 (Horizontal)/23 (Vertical)		16 (Horizontal)/32 (Vertical)	
	Max. instantaneous power consumption [W] Note 7)		71		102		111	
Lock unit specifications	Type	Note 8)	Non-magnetizing lock					
	Holding force [N]		24	2.5	300	48	500	77
	Power consumption [W] Note 9)		4		3.6		5	
	Rated voltage [V]		24 VDC ±10%					

Note 1) LES25DA is not available.
Note 2) The pushing force values for LES8□A is 50 to 75%. Pushing force accuracy is ±20% (F.S.).
Note 3) A reference value for correcting an error in reciprocal operation.
Note 4) Vibration resistance: No malfunction occurred in a test ranging between 45 to 2000 Hz. Test was performed in both an axial direction and a perpendicular direction to the lead screw. (Test was performed with the actuator in the initial state.)
Impact resistance: No malfunction occurred when the actuator was tested with a drop tester in both an axial direction and a perpendicular direction to the lead screw. (Test was performed with the actuator in the initial state.)
Note 5) The power consumption (including the controller) is for when the actuator is operating.
Note 6) The standby power consumption when operating (including the controller) is for when the actuator is stopped in the set position during the operation. Except during the pushing operation.
Note 7) The maximum instantaneous power consumption (including the controller) is for when the actuator is operating. This value can be used for the selection of the power supply.
Note 8) With lock only
Note 9) For an actuator with lock, add the power consumption for the lock.

Weight

Step Motor (Servo/24 VDC), Servo Motor (24 VDC) Common

[kg]

		Without lock						With lock					
Stroke [mm]		30	50	75	100	125	150	30	50	75	100	125	150
Model	LES8$^{R}_{L}$(A)	0.45	0.54	0.59	—	—	—	—	—	0.66	—	—	—
	LES16$^{R}_{L}$(A)	0.91	1.00	1.16	1.24	—	—	—	—	1.29	1.37	—	—
	LES25$^{R}_{L}$(A)	1.81	2.07	2.41	3.21	3.44	3.68	—	2.34	2.68	3.48	3.71	3.95
	LES8D(A)	0.40	0.52	0.58	—	—	—	0.47	0.59	0.65	—	—	—
	LES16D(A)	0.77	0.90	1.11	1.20	—	—	0.90	1.03	1.25	1.33	—	—
	LES25D	1.82	2.05	2.35	3.07	3.27	3.47	2.08	2.31	2.61	3.33	3.53	3.74

Construction: Basic Type/R Type, Symmetrical Type/L Type

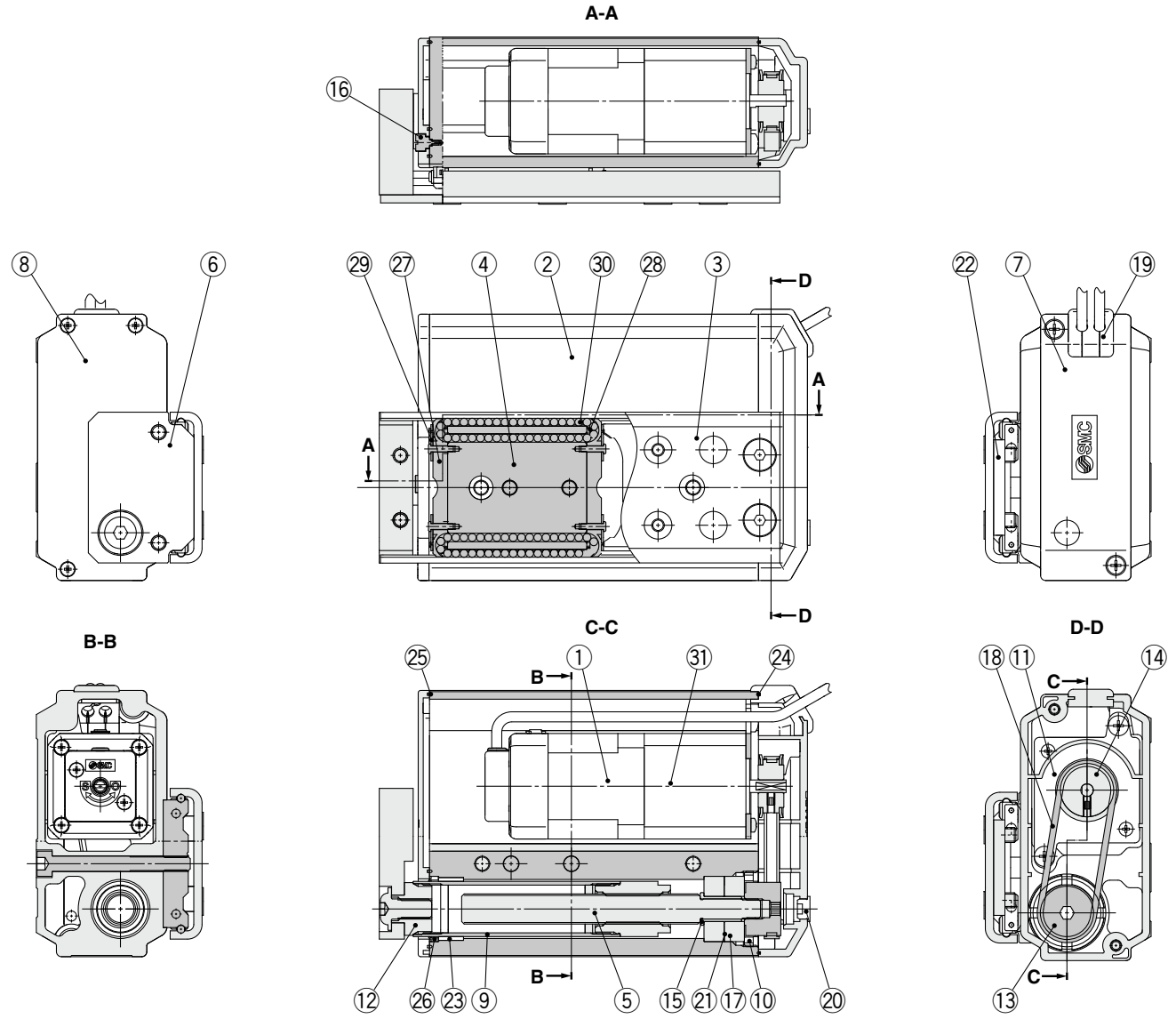

Component Parts

No.	Description	Material	Note
1	**Motor**	—	—
2	**Body**	Aluminum alloy	Anodized
3	**Table**	Stainless steel	Heat treatment + Electroless nickel plating
4	**Guide block**	Stainless steel	Heat treatment
5	**Lead screw**	Stainless steel	Heat treatment + Specially treated
6	**End plate**	Aluminum alloy	Anodized
7	**Pulley cover**	Synthetic resin	—
8	**End cover**	Synthetic resin	—
9	**Rod**	Stainless steel	—
10	**Bearing stopper**	Structural steel	Electroless nickel plating
		Brass	Electroless nickel plating (LES25R/L□ only)
11	**Motor plate**	Structural steel	—
12	**Socket**	Structural steel	Electroless nickel plating
13	**Lead screw pulley**	Aluminum alloy	—
14	**Motor pulley**	Aluminum alloy	—
15	**Spacer**	Stainless steel	LES25R/L□ only
16	**Origin stopper**	Structural steel	Electroless nickel plating
17	**Bearing**	—	—
18	**Belt**	—	—
19	**Grommet**	Synthetic resin	—
20	**Cap**	SI	—
21	**Sim ring**	Structural steel	—

No.	Description	Material	Note
22	**Stopper**	Structural steel	—
23	**Bushing**	—	Dust-protected option only
24	**Pulley gasket**	NBR	Dust-protected option only
25	**End gasket**	NBR	Dust-protected option only
26	**Scraper**	NBR	Dust-protected option only
27	**Cover**	Synthetic resin	—
28	**Return guide**	Synthetic resin	—
29	**Cover support**	Stainless steel	—
30	**Steel ball**	Special steel	—
31	**Lock**	—	With lock only

Replacement Parts/Belt

Size	Order no.	Note
LES8□	LE-D-1-1	Without manual override screw
LES16□	LE-D-1-2	—
LES25□	LE-D-1-3	—
LES25□A	LE-D-1-4	—
LES8□	LE-D-1-5	With manual override screw

Replacement Parts/Grease Pack

Applied portion	Order no.
Guide unit	GR-S-010 (10 g) GR-S-020 (20 g)

Construction: In-line Motor Type/D Type

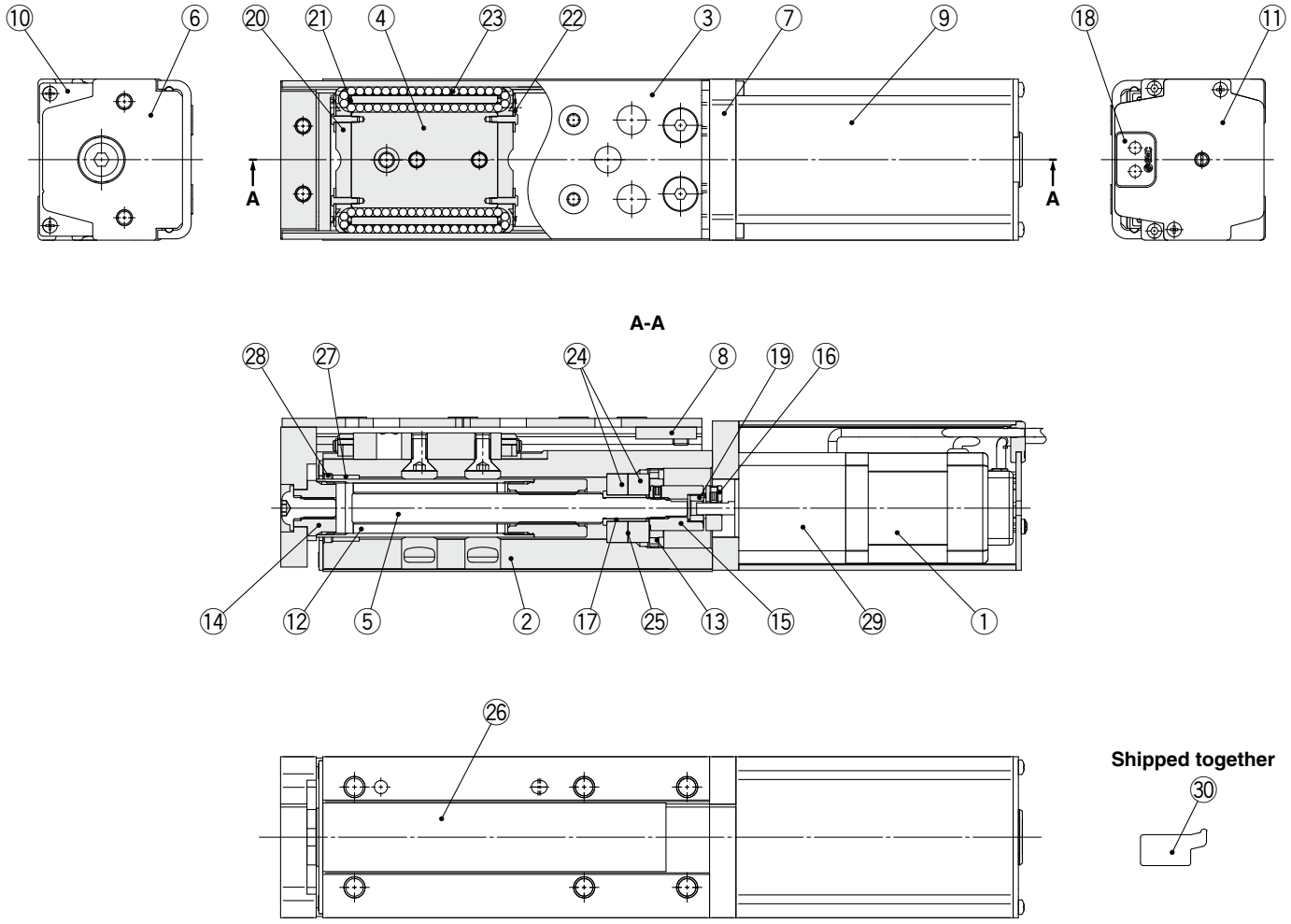

Component Parts

No.	Description	Material	Note
1	**Motor**	—	—
2	**Body**	Aluminum alloy	Anodized
3	**Table**	Stainless steel	Heat treatment + Electroless nickel plating
4	**Guide block**	Stainless steel	Heat treatment
5	**Lead screw**	Stainless steel	Heat treatment + Specially treated
6	**End plate**	Aluminum alloy	Anodized
7	**Motor flange**	Aluminum alloy	Anodized
8	**Stopper**	Structural steel	—
9	**Motor cover**	Aluminum alloy	Anodized
10	**End cover**	Aluminum alloy	Anodized
11	**Motor end cover**	Aluminum alloy	Anodized
12	**Rod**	Stainless steel	—
13	**Bearing stopper**	Structural steel	Electroless nickel plating
		Brass	Electroless nickel plating (LES25D□ only)
14	**Socket**	Structural steel	Electroless nickel plating
15	**Hub (Lead screw side)**	Aluminum alloy	—
16	**Hub (Motor side)**	Aluminum alloy	—
17	**Spacer**	Stainless steel	LES25D□ only
18	**Grommet**	NBR	—
19	**Spider**	NBR	—
20	**Cover**	Synthetic resin	—

No.	Description	Material	Note
21	**Return guide**	Synthetic resin	—
22	**Cover support**	Stainless steel	—
23	**Steel ball**	Special steel	—
24	**Bearing**	—	—
25	**Sim ring**	Structural steel	—
26	**Masking tape**	—	—
27	**Bushing**	—	Dust-protected option only
28	**Scraper**	NBR	Dust-protected option only
29	**Lock**	—	With lock only
30	**Side holder**	Aluminum alloy	Anodized

Optional Parts/Side Holder

Model	Order no.
LES8D	LE-D-3-1
LES16D	LE-D-3-2
LES25D	LE-D-3-3

Replacement Parts/Grease Pack

Applied portion	Order no.
Guide unit	GR-S-010 (10 g) GR-S-020 (20 g)

Dimensions: Basic Type/R Type

LES8R

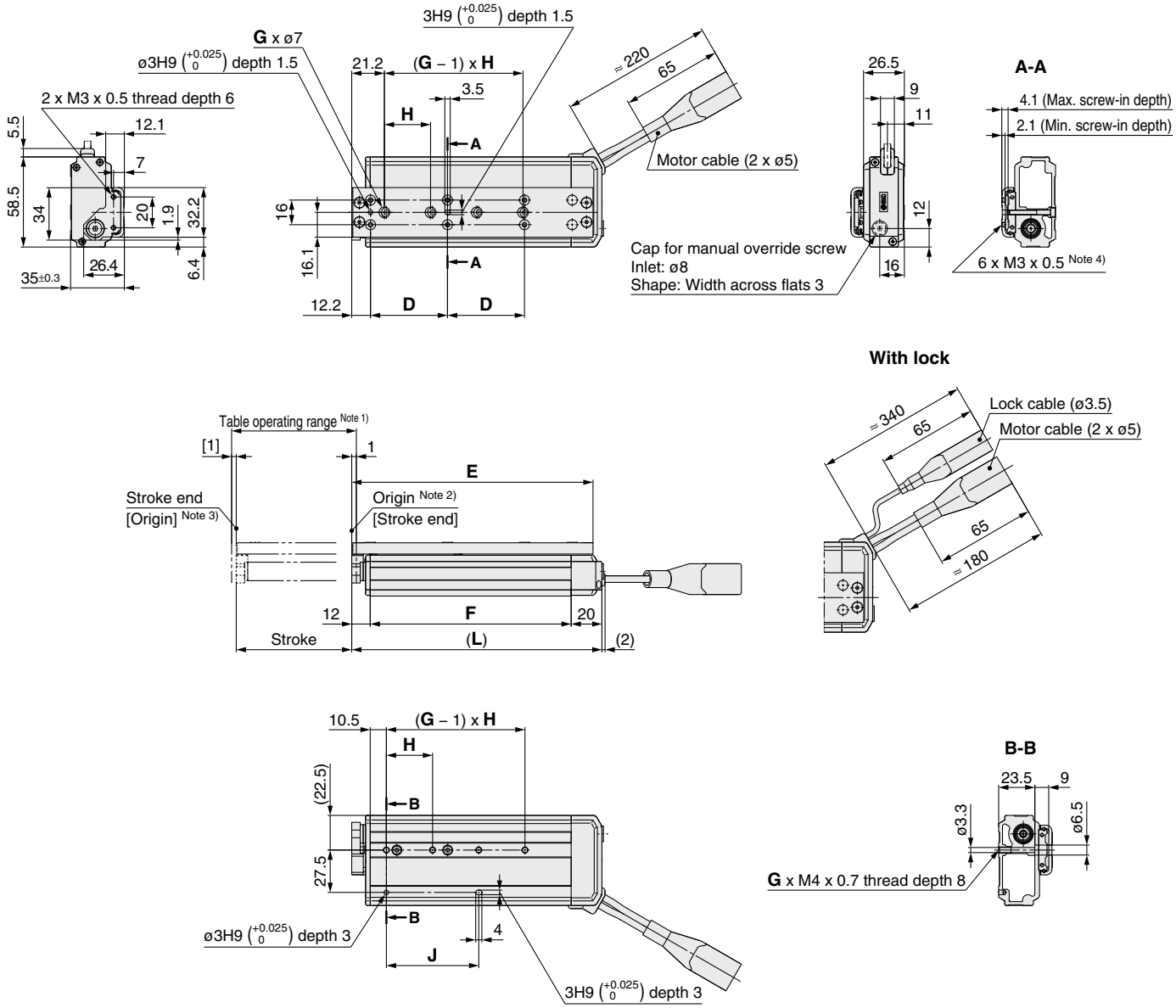

Connector		
	Step motor	Servo motor
Motor cable	20 / 20	24 / 24
Lock cable	20 / 15	20 / 15

Note 1) Range within which the table can move when it returns to origin.
Make sure a workpiece mounted on the table does not interfere with the workpieces and facilities around the table.
Note 2) Position after return to origin.
Note 3) [ ] for when the direction of return to origin has changed.
Note 4) If workpiece retaining screws are too long, they can touch the guide block and cause a malfunction. Use screws that are between the maximum and minimum screw-in depths in length.

Dimensions [mm]

Model	L	D	E	F	G	H	J
LES8R□□-30□-□□□□□	94.5	26	88.7	62.5	2	27	27
LES8R□□-50□-□□□□□	137.5	46	131.7	105.5	3	29	58
LES8R□□-75□□-□□□□□	162.5	50	156.7	130.5	4	30	60

Dimensions: Basic Type/R Type

LES16R

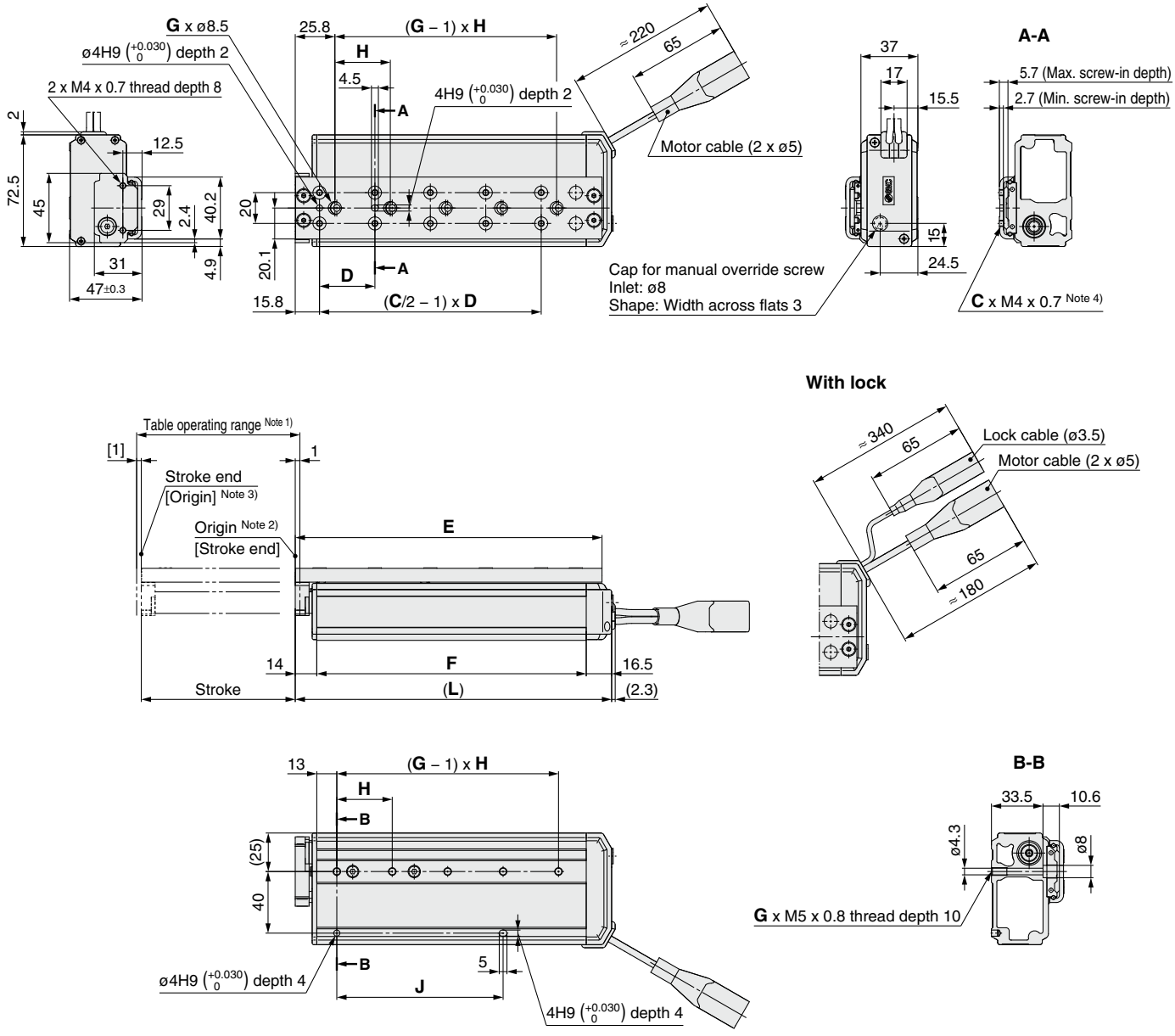

Note 1) Range within which the table can move when it returns to origin.
Make sure a workpiece mounted on the table does not interfere with the workpieces and facilities around the table.
Note 2) Position after return to origin.
Note 3) [ ] for when the direction of return to origin has changed.
Note 4) If workpiece retaining screws are too long, they can touch the guide block and cause a malfunction. Use screws that are between the maximum and minimum screw-in depths in length.

Connector

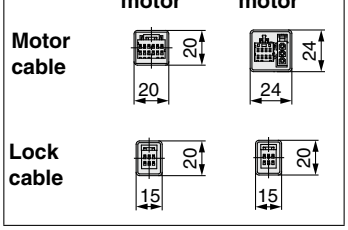

Dimensions [mm]

Model	L	C	D	E	F	G	H	J
LES16R□□-30□-□□□□□	108.5	4	38	102.3	78	2	40	40
LES16R□□-50□-□□□□□	136.5	6	34	130.3	106	2	78	78
LES16R□□-75□□-□□□□□	180.5	8	36	174.3	150	4	36	72
LES16R□□-100□□-□□□□□	205.5	10	36	199.3	175	5	36	108

Dimensions: Basic Type/R Type

LES25R

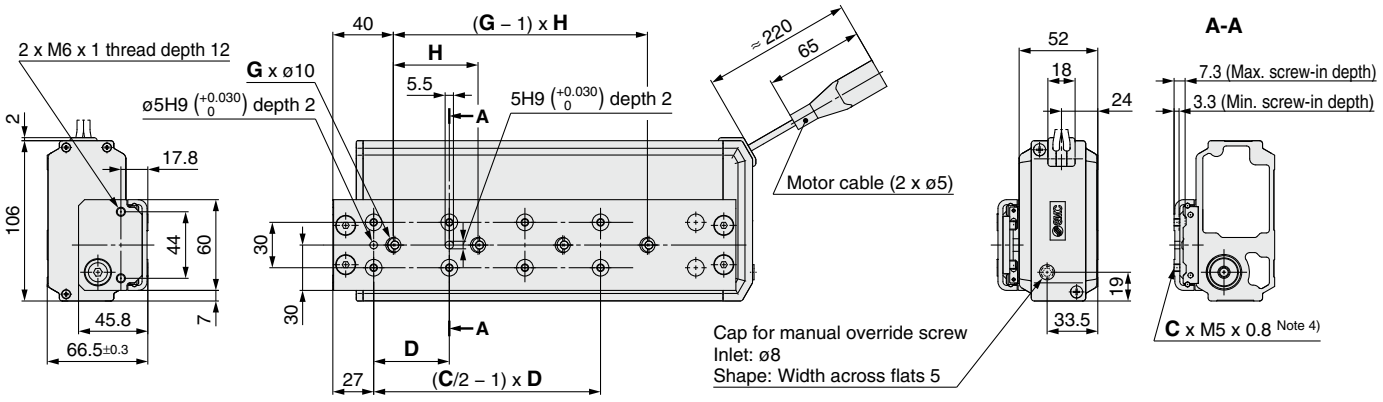

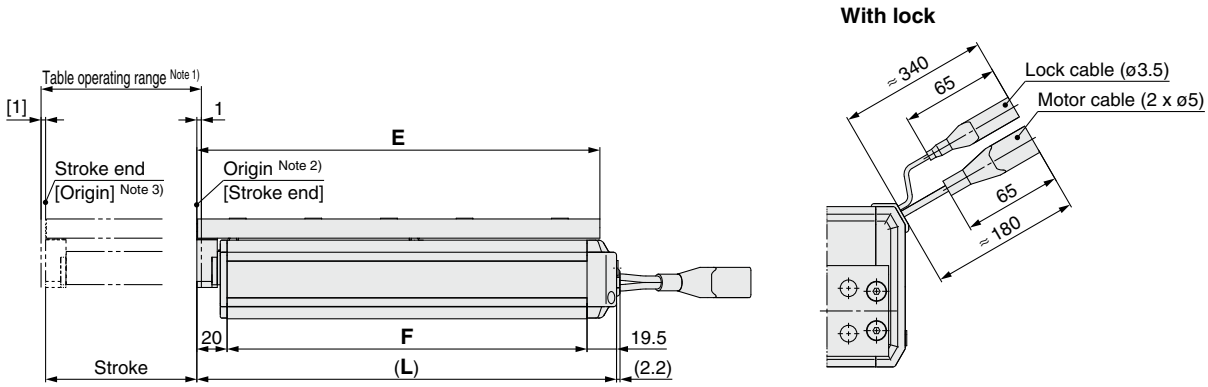

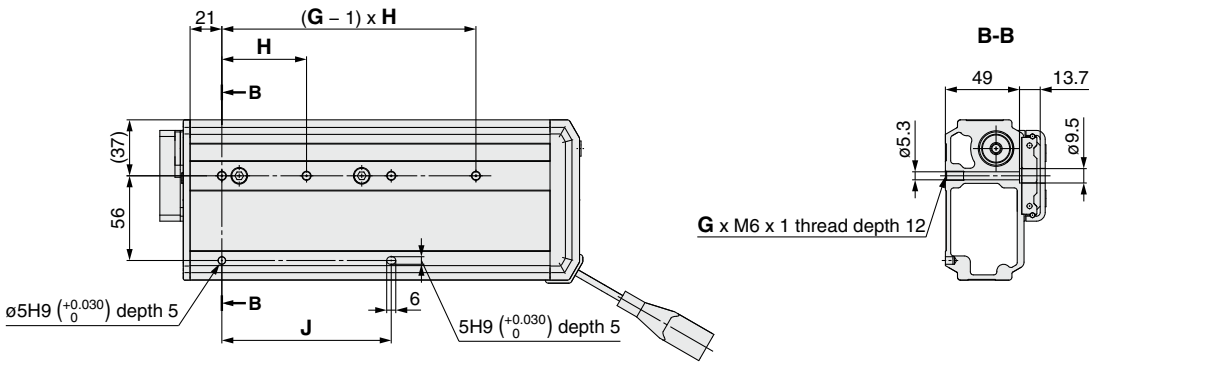

Connector		
	Step motor	Servo motor
Motor cable	20 / 20	24 / 24
Lock cable	20 / 15	20 / 15

Note 1) Range within which the table can move when it returns to origin.
Make sure a workpiece mounted on the table does not interfere with the workpieces and facilities around the table.
Note 2) Position after return to origin.
Note 3) [ ] for when the direction of return to origin has changed.
Note 4) If workpiece retaining screws are too long, they can touch the guide block and cause a malfunction. Use screws that are between the maximum and minimum screw-in depths in length.

Dimensions

[mm]

Model	L	C	D	E	F	G	H	J
LES25R□□-30□-□□□□□	144.5	4	48	133.5	105	2	46	46
LES25R□□-50□□-□□□□□	170.5	6	42	159.5	131	2	84	84
LES25R□□-75□□-□□□□□	204.5	6	55	193.5	165	2	112	112
LES25R□□-100□□-□□□□□	277.5	8	50	266.5	238	4	56	112
LES25R□□-125□□-□□□□□	302.5	8	55	291.5	263	4	59	118
LES25R□□-150□□-□□□□□	327.5	8	62	316.5	288	4	62	124

Dimensions: Symmetrical Type/L Type

LES8L

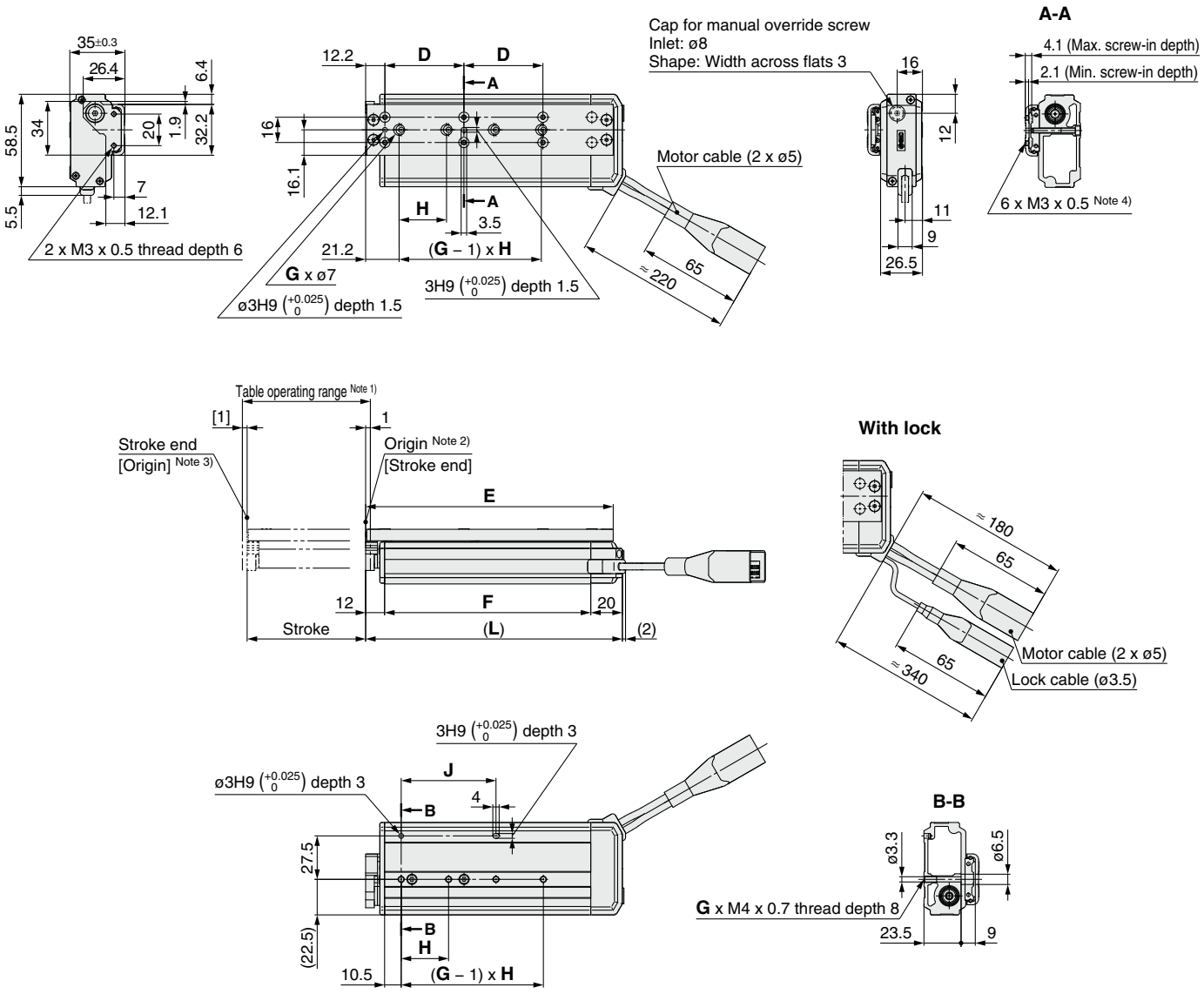

Connector		
	Step motor	Servo motor
Motor cable	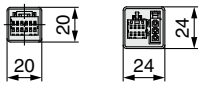	
Lock cable	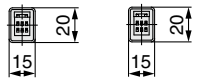	

Note 1) Range within which the table can move when it returns to origin.
Make sure a workpiece mounted on the table does not interfere with the workpieces and facilities around the table.
Note 2) Position after return to origin.
Note 3) [ ] for when the direction of return to origin has changed.
Note 4) If workpiece retaining screws are too long, they can touch the guide block and cause a malfunction. Use screws that are between the maximum and minimum screw-in depths in length.

Dimensions [mm]

Model	L	D	E	F	G	H	J
LES8L□□-30□-□□□□□	94.5	26	88.7	62.5	2	27	27
LES8L□□-50□-□□□□□	137.5	46	131.7	105.5	3	29	58
LES8L□□-75□□-□□□□□	162.5	50	156.7	130.5	4	30	60

Dimensions: Symmetrical Type/L Type

LES16L

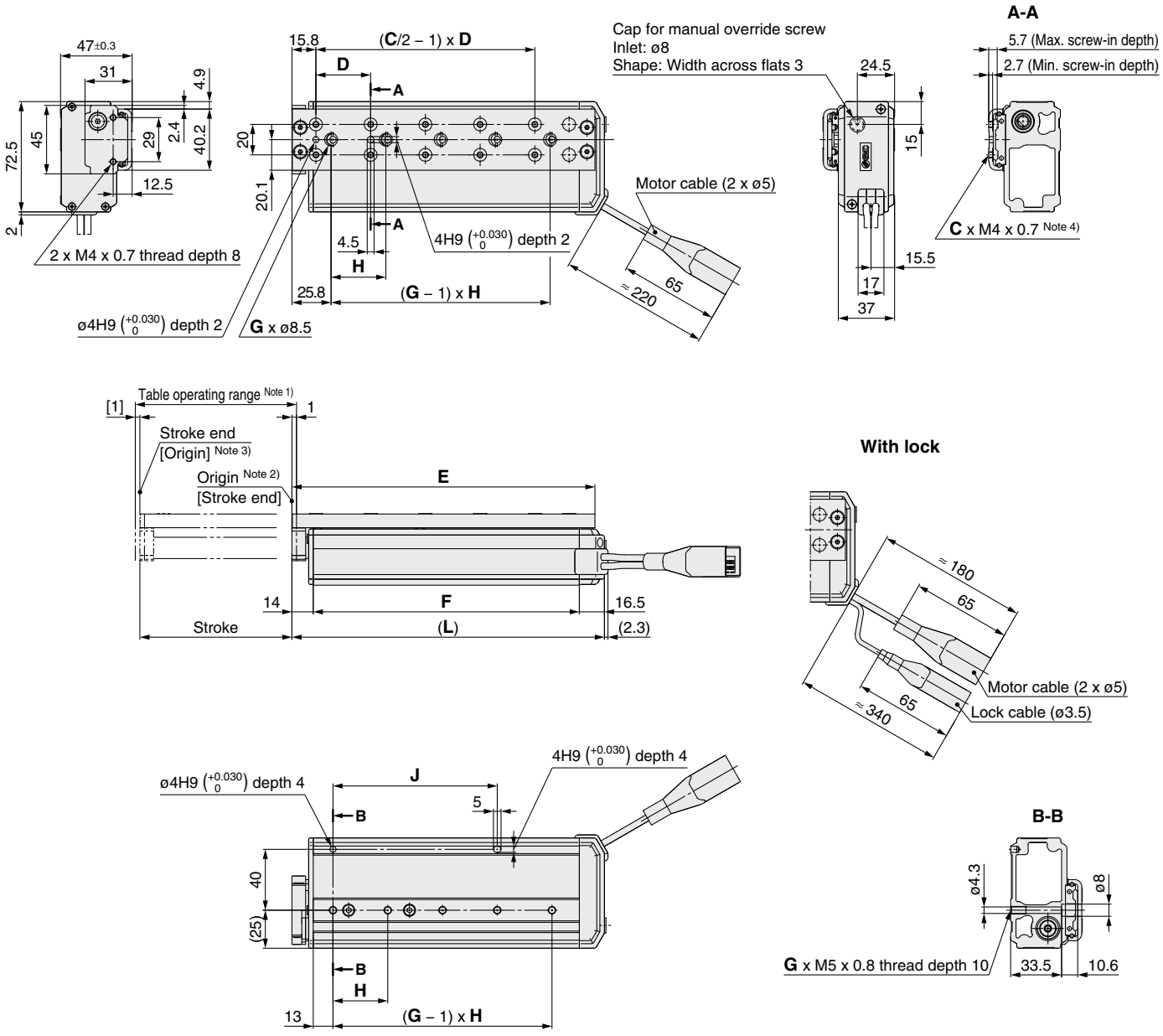

Connector		
	Step motor	Servo motor
Motor cable	20, 20	24, 24
Lock cable	20, 15	20, 15

Note 1) Range within which the table can move when it returns to origin.
Make sure a workpiece mounted on the table does not interfere with the workpieces and facilities around the table.
Note 2) Position after return to origin.
Note 3) [ ] for when the direction of return to origin has changed.
Note 4) If workpiece retaining screws are too long, they can touch the guide block and cause a malfunction. Use screws that are between the maximum and minimum screw-in depths in length.

Dimensions [mm]

Model	L	C	D	E	F	G	H	J
LES16L□□-30□-□□□□□	108.5	4	38	102.3	78	2	40	40
LES16L□□-50□-□□□□□	136.5	6	34	130.3	106	2	78	78
LES16L□□-75□□-□□□□□	180.5	8	36	174.3	150	4	36	72
LES16L□□-100□□-□□□□□	205.5	10	36	199.3	175	5	36	108

Dimensions: Symmetrical Type/L Type

LES25L

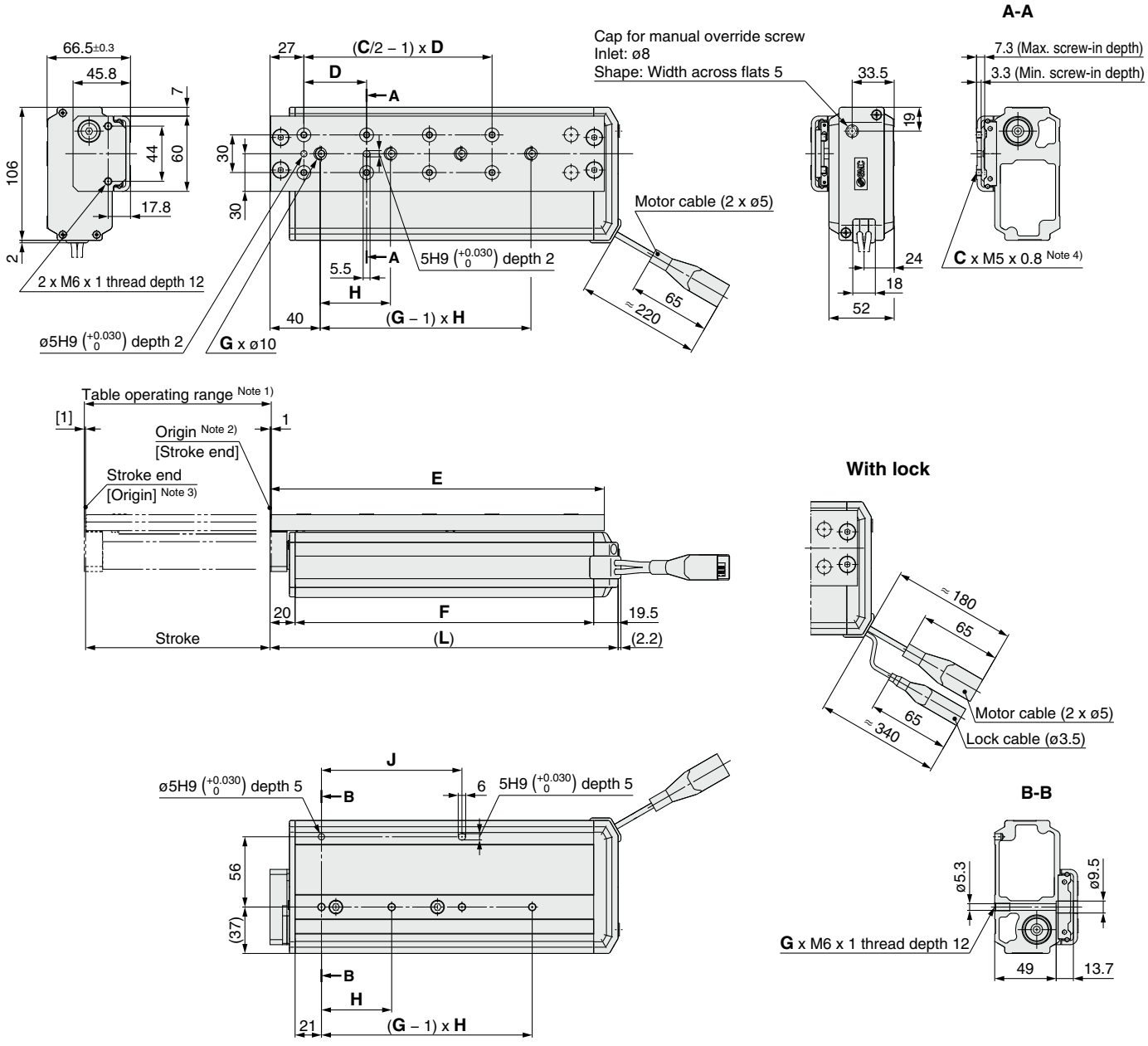

Connector		
	Step motor	Servo motor
Motor cable	20 / 20	24 / 24
Lock cable	20 / 15	20 / 15

Note 1) Range within which the table can move when it returns to origin.
Make sure a workpiece mounted on the table does not interfere with the workpieces and facilities around the table.
Note 2) Position after return to origin.
Note 3) [ ] for when the direction of return to origin has changed.
Note 4) If workpiece retaining screws are too long, they can touch the guide block and cause a malfunction. Use screws that are between the maximum and minimum screw-in depths in length.

Dimensions

[mm]

Model	L	C	D	E	F	G	H	J
LES25L□□-30□-□□□□□	144.5	4	48	133.5	105	2	46	46
LES25L□□-50□□-□□□□□	170.5	6	42	159.5	131	2	84	84
LES25L□□-75□□-□□□□□	204.5	6	55	193.5	165	2	112	112
LES25L□□-100□□-□□□□□	277.5	8	50	266.5	238	4	56	112
LES25L□□-125□□-□□□□□	302.5	8	55	291.5	263	4	59	118
LES25L□□-150□□-□□□□□	327.5	8	62	316.5	288	4	62	124

Dimensions: In-line Motor Type/D Type

LES8D

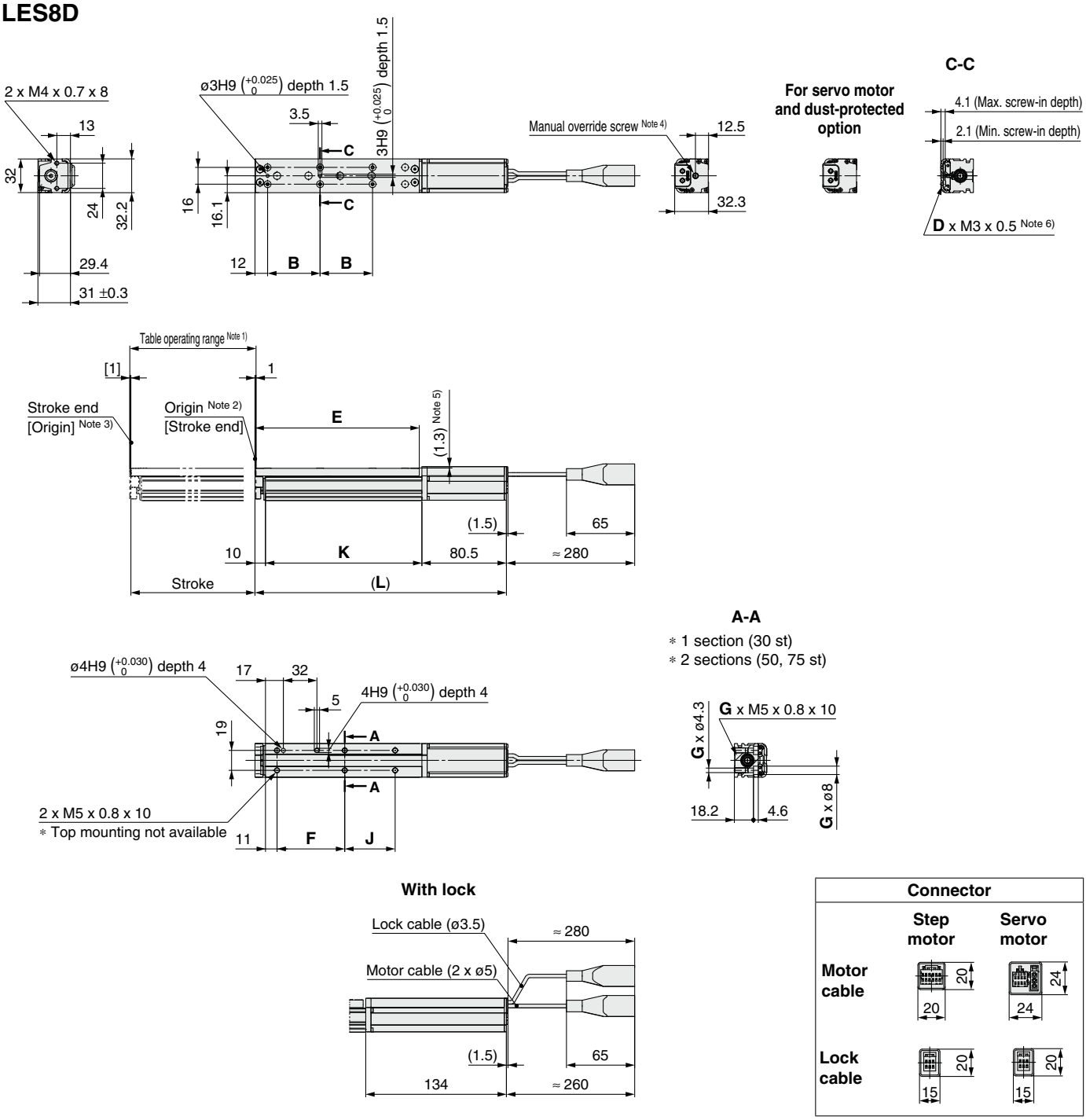

Connector

Note 1) Range within which the table can move when it returns to origin.
Make sure a workpiece mounted on the table does not interfere with the workpieces and facilities around the table.
Note 2) Position after return to origin.
Note 3) [ ] for when the direction of return to origin has changed.
Note 4) The distance between the motor end cover and the manual override screw is up to 16 mm. The motor end cover hole size is ø5.5.
Note 5) The table is lower than the motor cover. Make sure it does not interfere with the workpiece.
Note 6) If workpiece retaining screws are too long, they can touch the guide block and cause a malfunction.
Use screws that are between the maximum and minimum screw-in depths in length.

Dimensions

[mm]

Model	(L)	B	D	E	F	G	J	K
LES8D□□-30□□-□□□□□	171.5	26	6	88.5	44.5	2	—	81
LES8D□□-30B□□-□□□□□	225							
LES8D□□-50□□-□□□□□	214.5	46	6	131.5	64.5	4	23	124
LES8D□□-50B□□-□□□□□□	268							
LES8D□□-75□□-□□□□□	239.5	50	6	156.5	64.5	4	48	149
LES8D□□-75B□□-□□□□□	293							

Dimensions: In-line Motor Type/D Type

LES16D

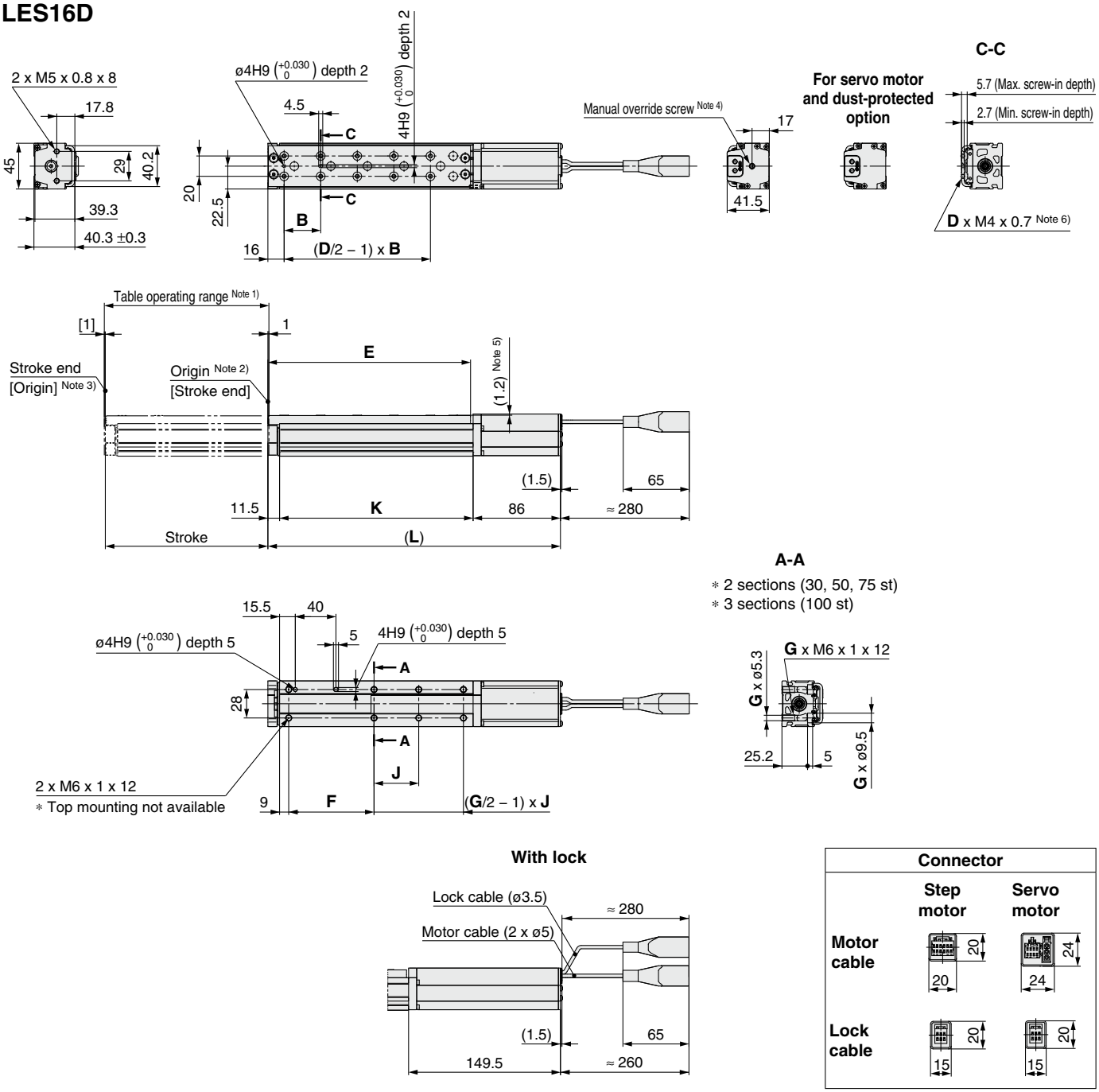

Connector	Step motor	Servo motor
Motor cable	20 / 20	24 / 24
Lock cable	20 / 15	20 / 15

Note 1) Range within which the table can move when it returns to origin.
Make sure a workpiece mounted on the table does not interfere with the workpieces and facilities around the table.
Note 2) Position after return to origin.
Note 3) [ ] for when the direction of return to origin has changed.
Note 4) The distance between the motor end cover and the manual override screw is up to 17 mm. The motor end cover hole size is ø5.5.
Note 5) The table is lower than the motor cover. Make sure it does not interfere with the workpiece.
Note 6) If workpiece retaining screws are too long, they can touch the guide block and cause a malfunction.
Use screws that are between the maximum and minimum screw-in depths in length.

Dimensions

[mm]

Model	(L)	B	D	E	F	G	J	K
LES16D□□-30□□-□□□□□	193	38	4	102.5	56.5	4	18.5	95.5
LES16D□□-30B□□-□□□□□	256.5							
LES16D□□-50□□-□□□□□	221	34	6	130.5	65	4	38	123.5
LES16D□□-50B□□-□□□□□	284.5							
LES16D□□-75□□-□□□□□	265	36	8	174.5	84	4	63	167.5
LES16D□□-75B□□-□□□□□	328.5							
LES16D□□-100□□-□□□□□	290	36	10	199.5	84	6	44	192.5
LES16D□□-100B□□-□□□□□	353.5							

Dimensions: In-line Motor Type/D Type

LES25D

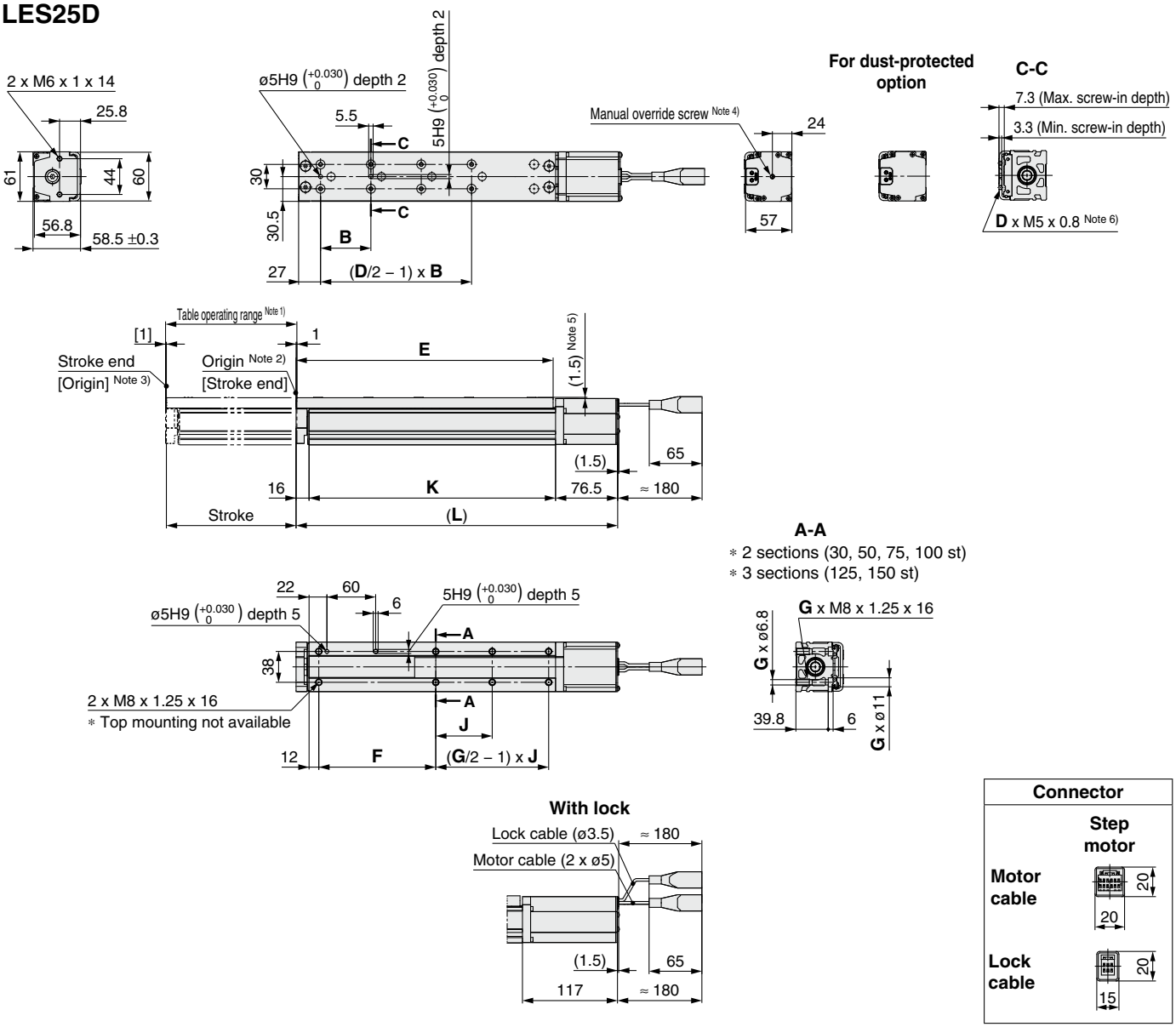

Connector

Note 1) Range within which the table can move when it returns to origin. Make sure a workpiece mounted on the table does not interfere with the workpieces and facilities around the table.
Note 2) Position after return to origin.
Note 3) [ ] for when the direction of return to origin has changed.
Note 4) The distance between the motor end cover and the manual override screw is up to 4 mm. The motor end cover hole size is ø5.5.
Note 5) The table is lower than the motor cover.
Note 6) If workpiece retaining screws are too long, they can touch the guide block and cause a malfunction. Use screws that are between the maximum and minimum screw-in depths in length.

Dimensions [mm]

Model	(L)	B	D	E	F	G	J	K
LES25D□-30□□-□□□□□	214	48	4	133.5	81	4	19	121.5
LES25D□-30B□□-□□□□□	254.5							
LES25D□-50□□-□□□□□	240	42	6	159.5	87	4	39	147.5
LES25D□-50B□□-□□□□□	280.5							
LES25D□-75□□-□□□□□	274	55	6	193.5	96	4	64	181.5
LES25D□-75B□□-□□□□□	314.5							
LES25D□-100□□-□□□□□	347	50	8	266.5	144	4	89	254.5
LES25D□-100B□□-□□□□□	387.5							
LES25D□-125□□-□□□□□	372	55	8	291.5	144	6	57	279.5
LES25D□-125B□□-□□□□□	412.5							
LES25D□-150□□-□□□□□	397	62	8	316.5	144	6	69.5	304.5
LES25D□-150B□□-□□□□□	437.5							

Side Holder (In-line Motor Type/D Type)

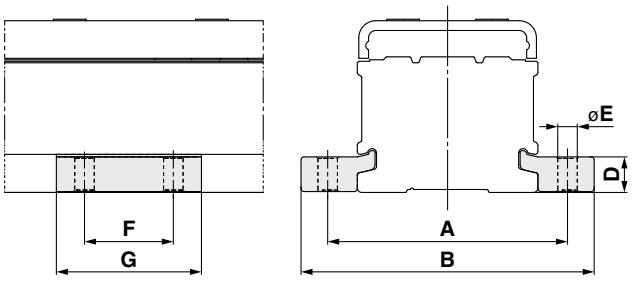

[mm]

Part no. Note)	A	B	D	E	F	G	Applicable model
LE-D-3-1	45	57.6	6.7	4.5	20	33	**LES8D**
LE-D-3-2	60	74	8.3	5.5	25	40	**LES16D**
LE-D-3-3	81	99	12	6.6	30	49	**LES25D**

Note) Model numbers for 1 side holder.

Electric Slide Table/High Rigidity Type

Series LESH

Model Selection 1

Series LESH ▶ Page 341

Selection Procedure

For the compact type LES series, refer to page 305.

Step 1 Check the work load–speed. → **Step 2** Check the cycle time. → **Step 3** Check the allowable moment.

Selection Example

Operating conditions

- Workpiece mass: 1 [kg]
- Workpiece mounting condition:
- Speed: 220 [mm/s]
- Mounting orientation: Vertical
- Stroke: 50 [mm]
- Acceleration/Deceleration: 5000 [mm/s²]
- Cycle time: 0.5 seconds

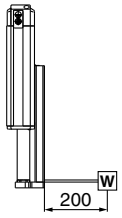

Step 1 **Check the work load–speed. <Speed–Work load graph>** (Page 332)

Select the target model based on the workpiece mass and speed with reference to the <Speed–Work load graph>.

Selection example) The **LESH16□J-50** is temporarily selected based on the graph shown on the right side.

LESH16□/Step Motor Vertical

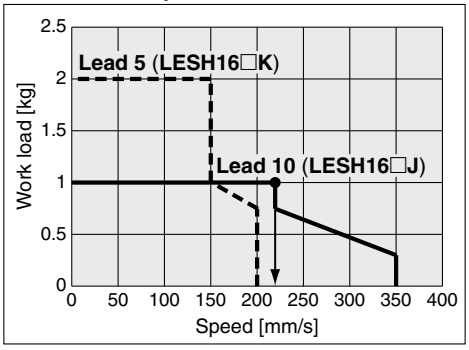

<Speed–Work load graph>

Step 2 **Check the cycle time.**

It is possible to obtain an approximate cycle time by using method 1, but if a more detailed cycle time is required, use method 2.

∗ Although it is possible to make a suitable selection by using method 1, this calculation is based on a maximum load condition. Therefore, if a more detailed selection for each load is required, use method 2.

Method 1: Check the cycle time graph. (Page 333)

Method 2: Calculation <Speed–Work load graph> (Page 332)

Calculate the cycle time using the following calculation method.

Cycle time:

T can be found from the following equation.

$T = T1 + T2 + T3 + T4$ [s]

- T1: Acceleration time and T3: Deceleration time can be obtained by the following equation.

$T1 = V/a1$ [s] $T3 = V/a2$ [s]

- T2: Constant speed time can be found from the following equation.

$$T2 = \frac{L - 0.5 \cdot V \cdot (T1 + T3)}{V} \text{ [s]}$$

- T4: Settling time varies depending on the conditions such as motor types, load and in position of the step data. Therefore, calculate the settling time with reference to the following value.

$T4 = 0.15$ [s]

Calculation example)

T1 to T4 can be calculated as follows.

$T1 = V/a1 = 220/5000 = 0.04$ [s],

$T3 = V/a2 = 220/5000 = 0.04$ [s]

$$T2 = \frac{L - 0.5 \cdot V \cdot (T1 + T3)}{V}$$

$$= \frac{50 - 0.5 \cdot 220 \cdot (0.04 + 0.04)}{220}$$

$= 0.19$ [s]

$T4 = 0.15$ [s]

Therefore, the cycle time can be obtained as follows.

$T = T1 + T2 + T3 + T4$

$= 0.04 + 0.19 + 0.04 + 0.15$

$=$ **0.42 [s]**

LESH16□/Step Motor

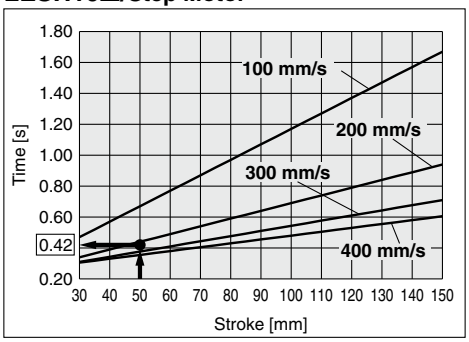

<Cycle time>

Step 3 **Check the allowable moment. <Static allowable moment>** (Page 333)
<Dynamic allowable moment> (Pages 334, 335)

Confirm the moment that applies to the actuator is within the allowable range for both static and dynamic conditions.

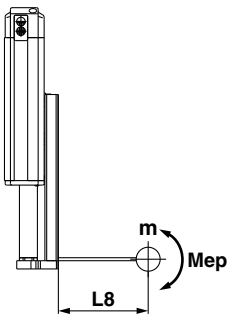

LESH16/Pitching

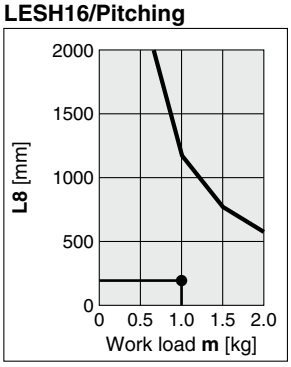

<Dynamic allowable moment>

Based on the above calculation result, the LESH16□J-50 is selected.

Speed–Work Load Graph (Guide)

Step Motor (Servo/24 VDC)

∗ The following graph shows the values when moving force is 100%.

LESH8□

Horizontal

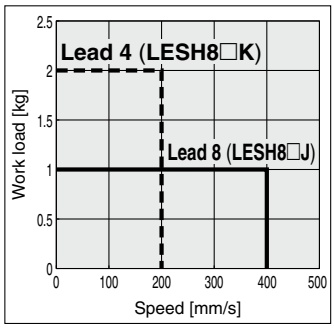

Vertical

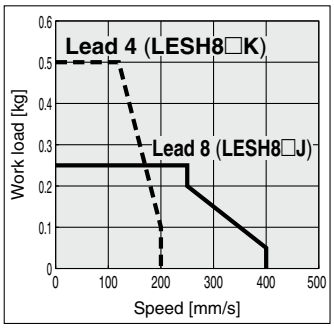

LESH16□

Horizontal

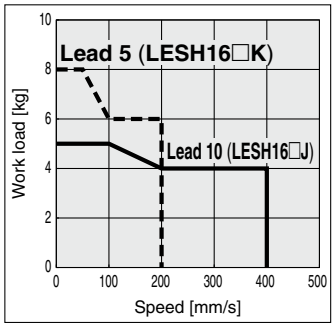

Vertical

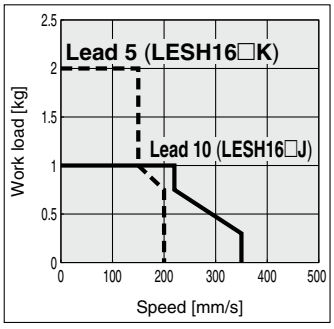

LESH25□

Horizontal

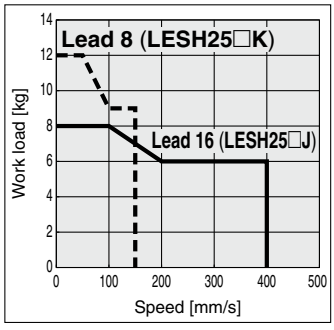

Vertical

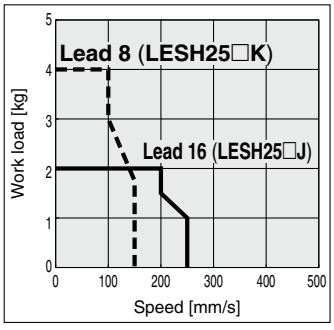

Servo Motor (24 VDC)

∗ The following graph shows the values when moving force is 250%.

LESH8□A

Horizontal

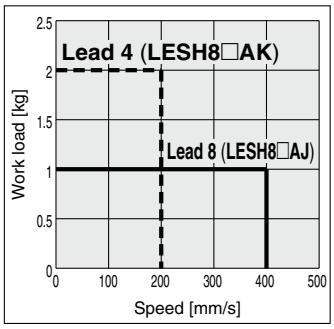

Vertical

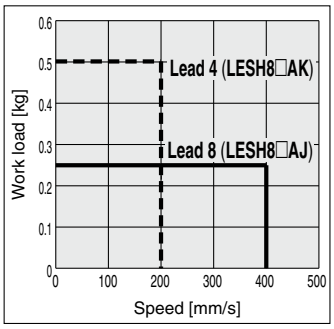

LESH16□A

Horizontal

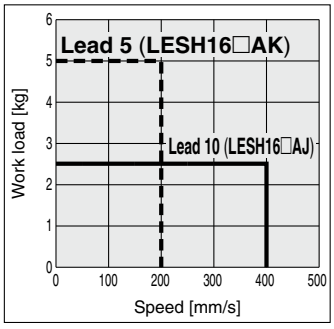

Vertical

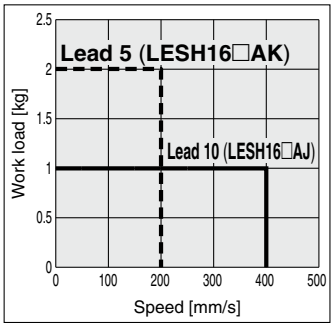

LESH25$^{R}_{L}$A

Horizontal

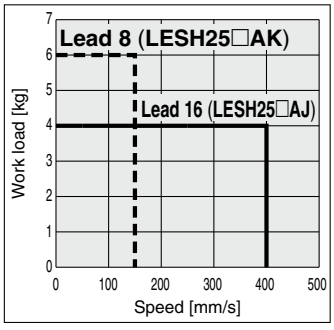

Vertical

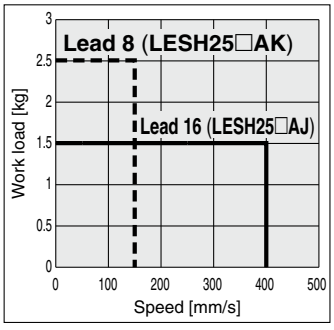

Cycle Time (Guide)

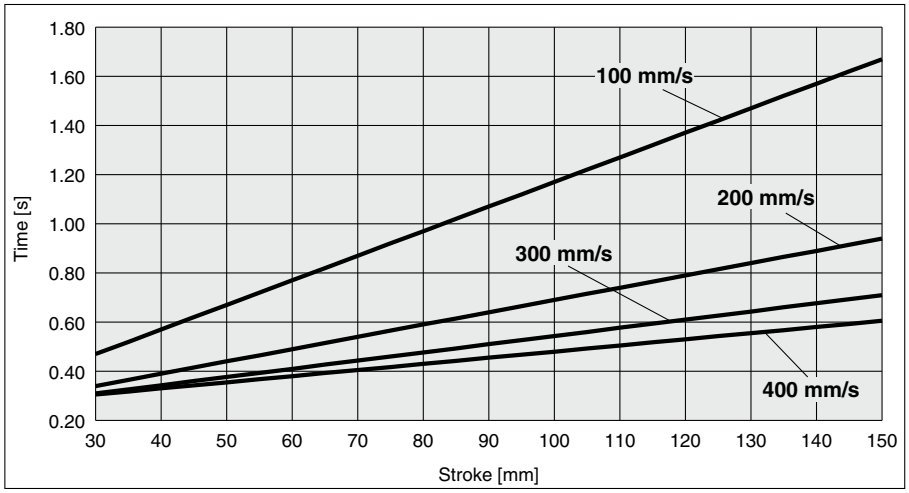

Operating Conditions

Acceleration/Deceleration: 5000 mm/s^2

In position: 0.5 mm

Static Allowable Moment

Model		LESH8		LESH16		LESH25		
Stroke	[mm]	50	75	50	100	50	100	150
Pitching	[N·m]	11		26	43	77	112	155
Yawing	[N·m]	11						
Rolling	[N·m]	12		48		146	177	152

Dynamic Allowable Moment

∗ This graph shows the amount of allowable overhang (guide unit) when the center of gravity of the workpiece overhangs in one direction. When selecting the overhang, refer to "Calculation of Guide Load Factor" or the Electric Actuator Selection Software for confirmation, http://www.smcworld.com

Acceleration/Deceleration —— 5000 mm/s²

Orientation	Load overhanging direction **m** : Work load [kg] **Me**: Dynamic allowable moment [N·m] **L** : Overhang to the work load center of gravity [mm]		Model		
			LESH8	**LESH16**	**LESH25**
Horizontal/Bottom	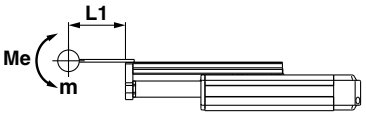	**X**	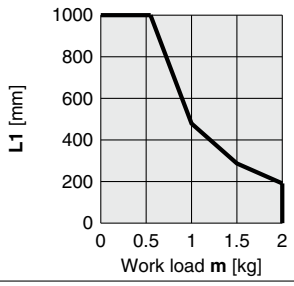	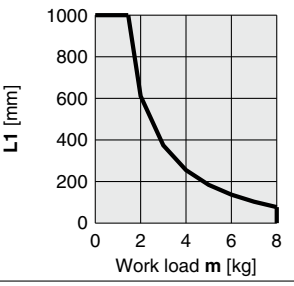	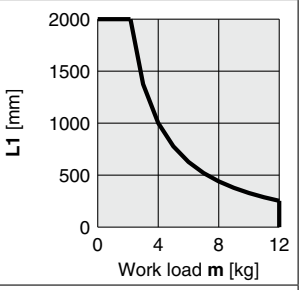
	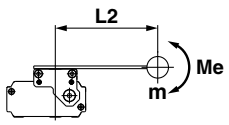	**Y**	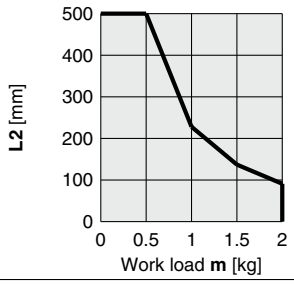	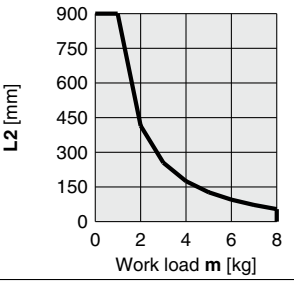	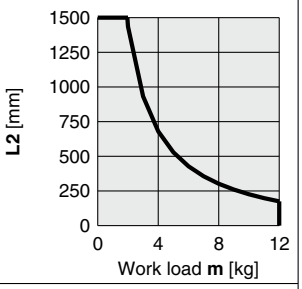
	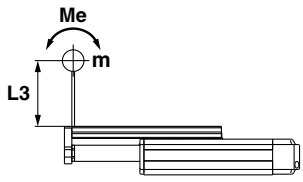	**Z**	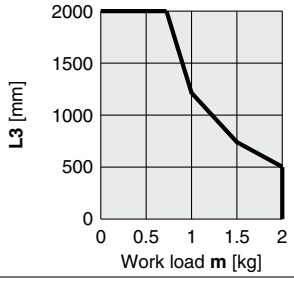	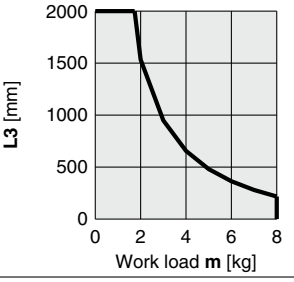	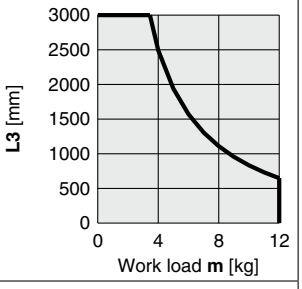
Horizontal (Wall)	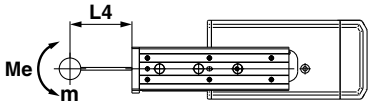	**X**	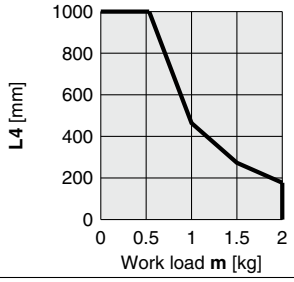	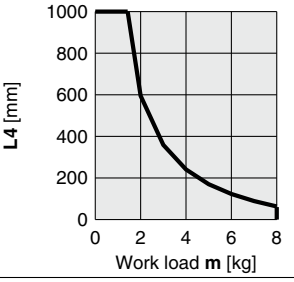	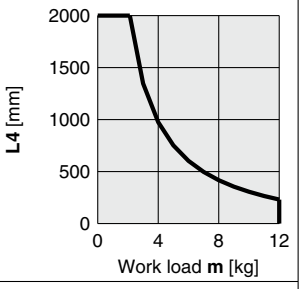
	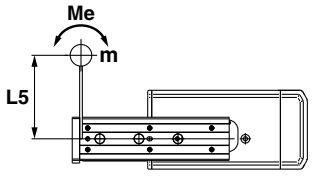	**Y**	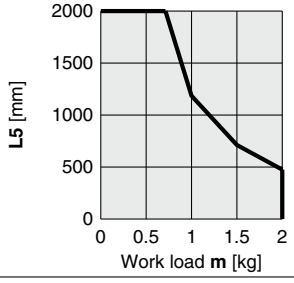	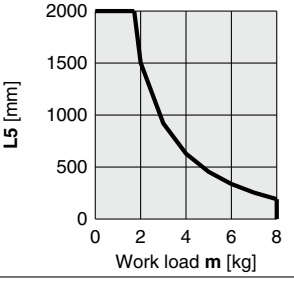	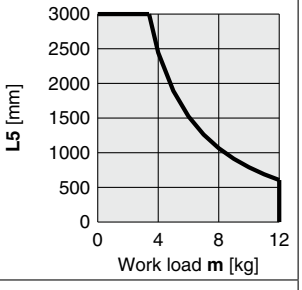
	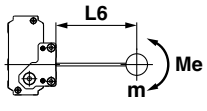	**Z**	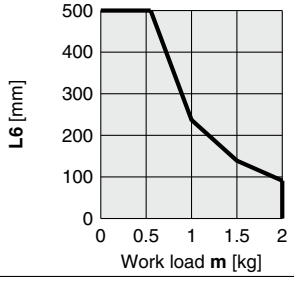	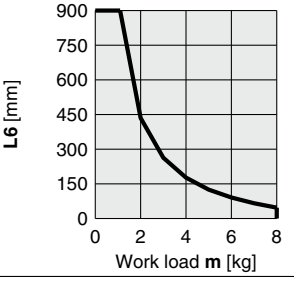	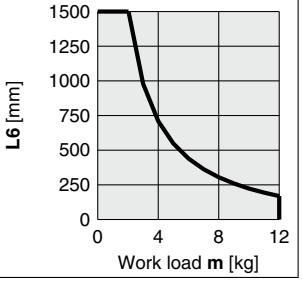

Dynamic Allowable Moment

∗ This graph shows the amount of allowable overhang (guide unit) when the center of gravity of the workpiece overhangs in one direction. When selecting the overhang, refer to "Calculation of Guide Load Factor" or the Electric Actuator Selection Software for confirmation, http://www.smcworld.com

Acceleration/Deceleration —— 5000 mm/s²

Orientation	Load overhanging direction **m** : Work load [kg] **Me**: Dynamic allowable moment [N·m] **L** : Overhang to the work load center of gravity [mm]		Model: LESH8	Model: LESH16	Model: LESH25
Vertical	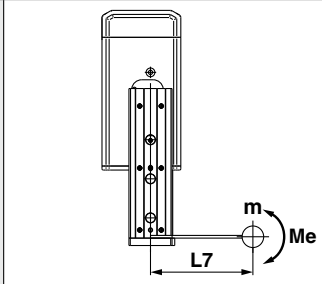	Y	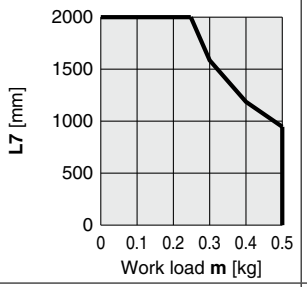	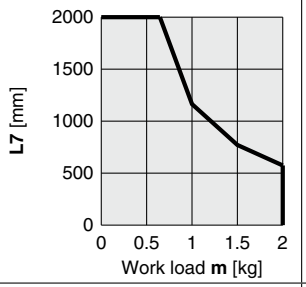	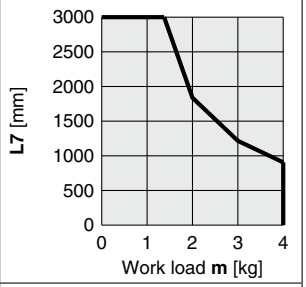
	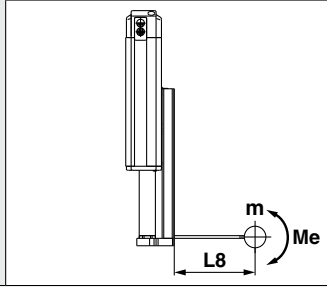	Z	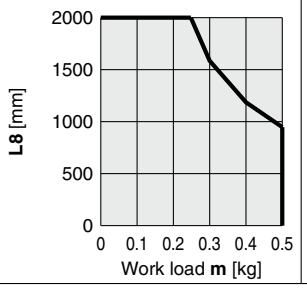	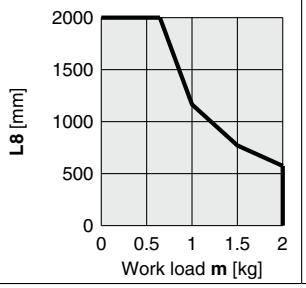	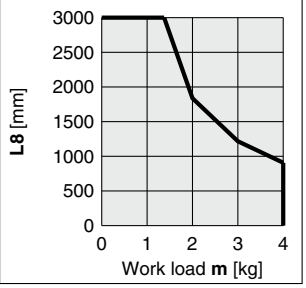

Calculation of Guide Load Factor

1. Decide operating conditions.
   Model: LESH
   Size: 8/16/25
   Mounting orientation: Horizontal/Bottom/Wall/Vertical
   Acceleration [mm/s²]: **a**
   Work load [kg]: **m**
   Work load center position [mm]: **Xc/Yc/Zc**
2. Select the target graph with reference to the model, size and mounting orientation.
3. Based on the acceleration and work load, obtain the overhang [mm]: **Lx/Ly/Lz** from the graph.
4. Calculate the load factor for each direction.
   α**x = Xc/Lx**, α**y = Yc/Ly**, α**z = Zc/Lz**
5. Confirm the total of α**x**, α**y** and α**z** is 1 or less.
   α**x + αy + αz ≤ 1**
   When 1 is exceeded, please consider a reduction of acceleration and work load, or a change of the work load center position and series.

Mounting orientation

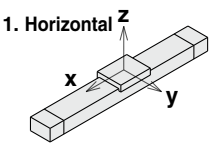

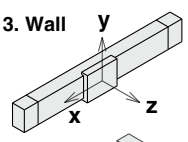

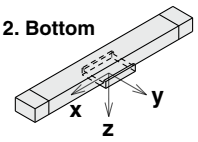

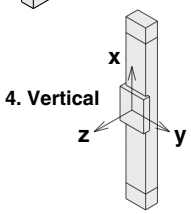

Example

1. Operating conditions
   Model: LESH
   Size: 8
   Mounting orientation: Horizontal
   Acceleration [mm/s²]: 5000
   Work load [kg]: 1.0
   Work load center position [mm]: **Xc = 80**, **Yc = 100**, **Zc = 60**
2. Select three graphs from the top of the left side first row on page 334.
3. **Lx = 480 mm**, **Ly = 225 mm**, **Lz = 1200 mm**
4. The load factor for each direction can be obtained as follows.
   α**x = 80/480 = 0.17**
   α**y = 100/225 = 0.44**
   α**z = 60/1200 = 0.05**
5. α**x + αy + αz = 0.66 ≤ 1**

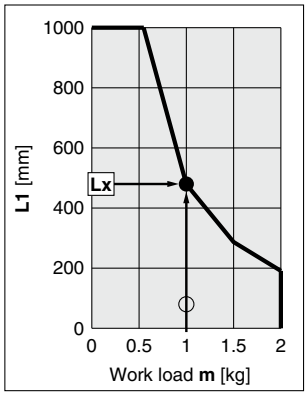

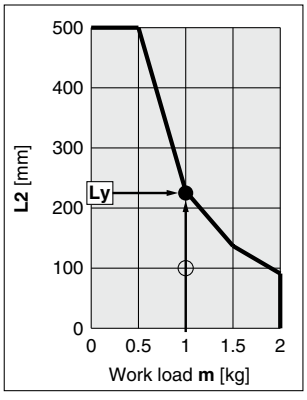

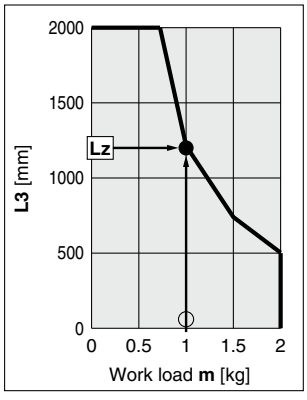

Step Motor (Servo/24 VDC) Servo Motor (24 VDC)

Electric Slide Table/High Rigidity Type

Series LESH

Model Selection 2

Series LESH ▶ Page 341

Selection Procedure

For the compact type LES series, refer to page 311.

Step 1 Check the required force. → **Step 2** Check the set value of pushing force. → **Step 3** Check the duty ratio.

Selection Example

Operating conditions

- Pushing force: 90 [N]
- Workpiece mass: 1 [kg]
- Speed: 100 [mm/s]
- Stroke: 100 [mm]
- Mounting orientation: Vertical upward
- Pushing time + Operation (A): 1.5 seconds
- All cycle time (B): 6 seconds

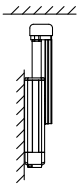

Step 1 Check the required force.

Calculate the approximate required force for pushing operation.

Selection example) •Pushing force: 90 [N]
•Workpiece mass: 1 [kg]
Therefore, the approximate required force can be obtained as 90 + 10 = 100 [N].

Select the target model based on the approximate required force with reference to the specifications (Pages 343 and 344).

Selection example) Based on the specifications,
•Approximate required force: 100 [N]
•Speed: 100 [mm/s]
Therefore, the **LESH25□** is temporarily selected.

Then, calculate the required force for pushing operation.

If the mounting position is vertical upward, add the actuator table weight.

Selection example) Based on the <Table weight>,
•**LESH25□** table weight: 1.3 [kg]
Therefore, the required force can be obtained as 100 + 13 = 113 [N].

Step 2 Check the set value of pushing force.

<Set value of pushing force–Force graph> (Page 338)

Select the target model based on the required force with reference to the <Set value of pushing force–Force graph>, and confirm the set value of pushing force.

Selection example) Based on the graph shown on the right side,
•Required force: 113 [N]
Therefore, the **LESH25□K** is temporarily selected.
This set value of pushing force is 40 [%].

Step 3 Check the duty ratio.

Confirm the allowable duty ratio based on the set value of pushing force with reference to the <Allowable duty ratio>.

Selection example) Based on the <Allowable duty ratio>,
•Set value of pushing force: 40 [%]
Therefore, the allowable duty ratio can be obtained as 30 [%].

Calculate the duty ratio for operating conditions, and confirm it does not exceed the allowable duty ratio.

Selection example) •Pushing time + Operation (A): 1.5 seconds
•All cycle time (B): 6 seconds
Therefore, the duty ratio can be obtained as 1.5/6 x 100 = 25 [%], and this is the allowable range.

Based on the above calculation result, the LESH25□K-100 is selected.

For allowable moment, the selection procedure is the same as the positioning control.

Table Weight [kg]

Model	Stroke [mm]			
	50	75	100	150
LESH8	0.2	0.3	—	—
LESH16	0.4	—	0.7	—
LESH25	0.9	—	1.3	1.7

∗ If the mounting position is vertical upward, add the table weight.

LESH25□/Step Motor

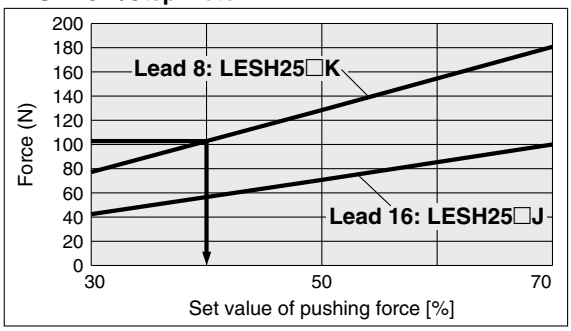

<Set value of pushing force–Force graph>

Allowable Duty Ratio

Step Motor (Servo/24 VDC)

Set value of pushing force (%)	Duty ratio (%)	Continuous pushing time (minute)
30	—	—
50 or less	30 or less	5 or less
70 or less	20 or less	3 or less

Servo Motor (24 VDC)

Set value of pushing force (%)	Duty ratio (%)	Continuous pushing time (minute)
50	—	—
75 or less	30 or less	5 or less
100 or less	20 or less	3 or less

∗ The pushing force of the LESH8□A is up to 75%.

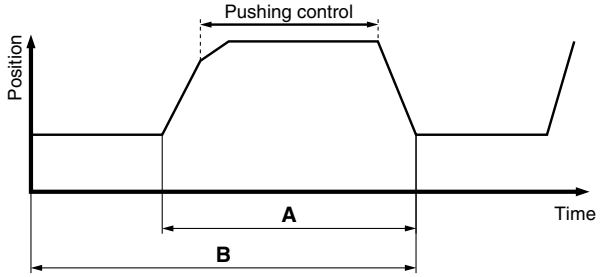

SMC

Set Value of Pushing Force–Force Graph

Step Motor (Servo/24 VDC)

LESH8□

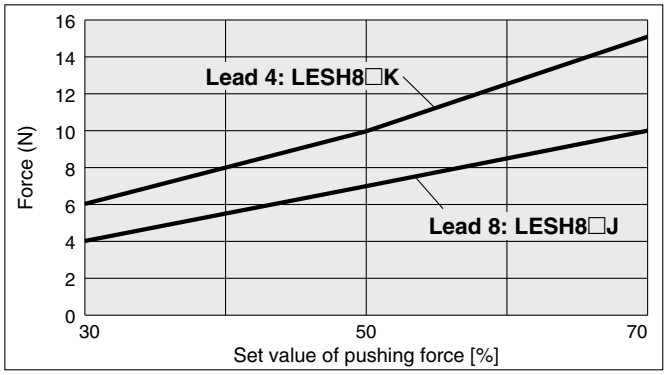

LESH16□

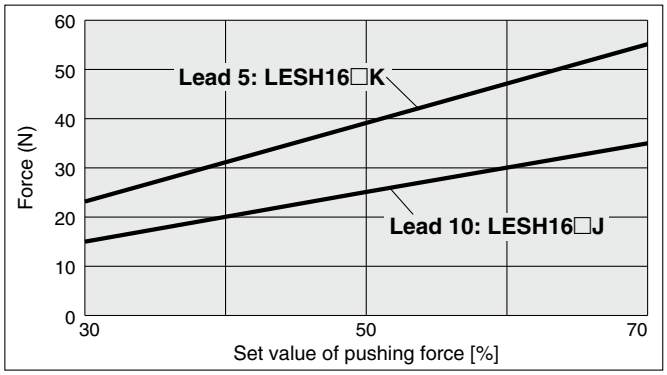

LESH25□

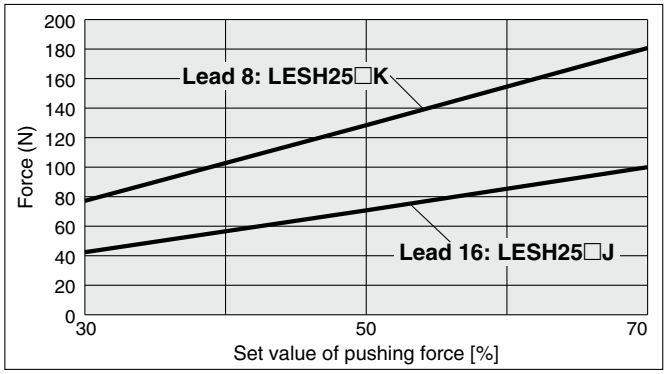

Servo Motor (24 VDC)

LESH8□A

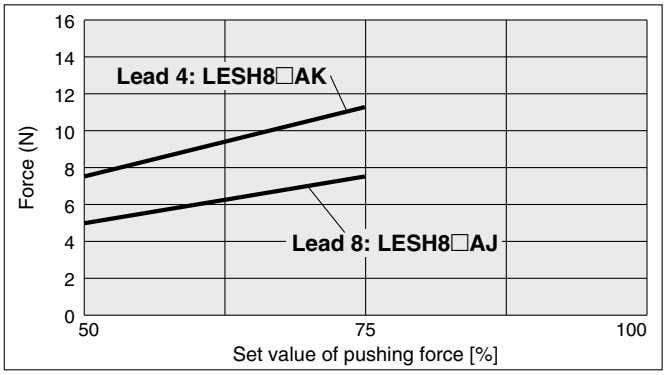

LESH16□A

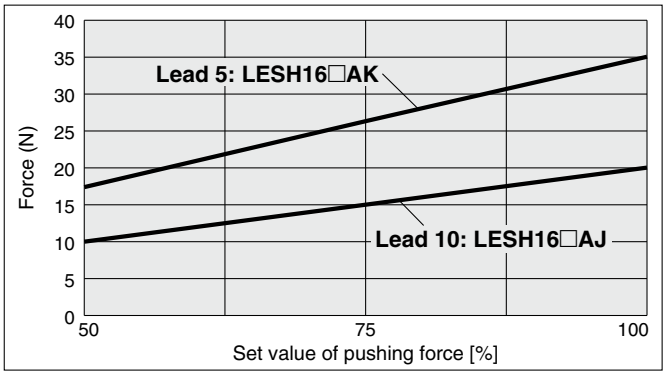

LESH25$^{R}_{L}$A

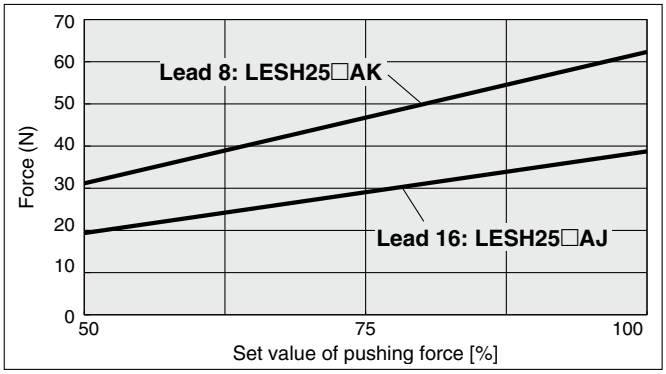

Table Accuracy

∗ These values are initial guideline values.

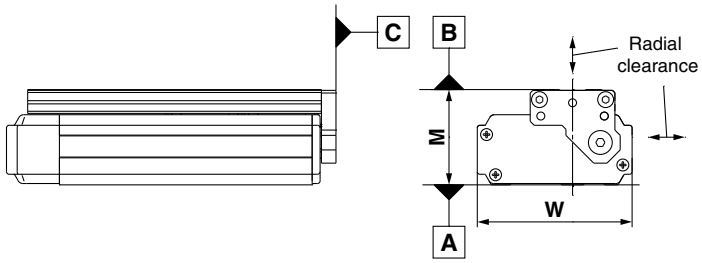

Model	LESH8	LESH16	LESH25
B side parallelism to A side [mm]	Refer to Table 1.		
B side traveling parallelism to A side [mm]	Refer to Graph 1.		
C side perpendicularity to A side [mm]	0.05	0.05	0.05
M dimension tolerance [mm]	±0.3		
W dimension tolerance [mm]	±0.2		
Radial clearance [μm]	−4 to 0	−10 to 0	−14 to 0

Table 1 B side parallelism to A side

Model	Stroke [mm]			
	50	75	100	150
LESH8	0.055	0.065	—	—
LESH16	0.05	—	0.08	—
LESH25	0.06	—	0.08	0.125

Graph 1 B side traveling parallelism to A side

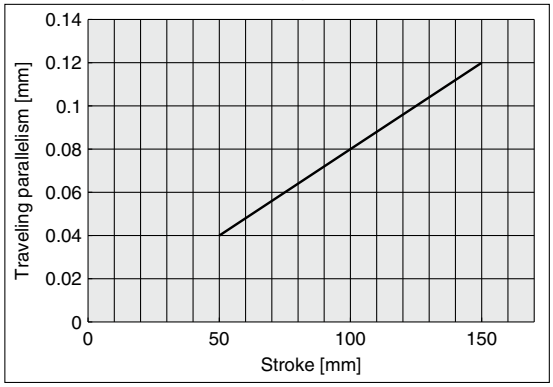

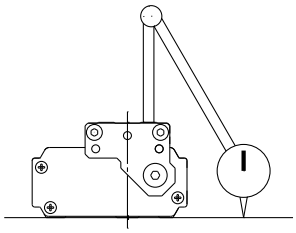

Traveling parallelism:
The amount of deflection on a dial gauge when the table travels a full stroke with the body secured on a reference base surface

Table Deflection (Reference Value)

∗ These values are initial guideline values.

Table displacement due to pitch moment load
Table displacement when loads are applied to the section marked with the arrow with the slide table stuck out.

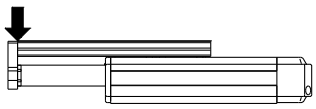

Table displacement due to yaw moment load
Table displacement when loads are applied to the section marked with the arrow with the slide table stuck out.

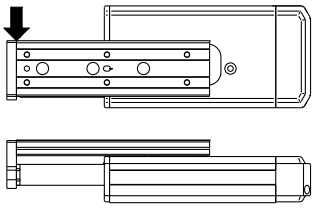

Table displacement due to roll moment load
Table displacement of section A when loads are applied to the section F with the slide table retracted.

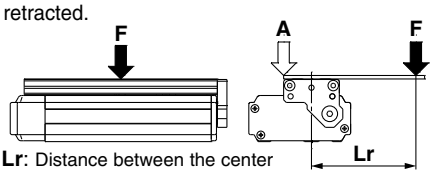

Lr: Distance between the center of the table and the work load center of gravity

LESH8

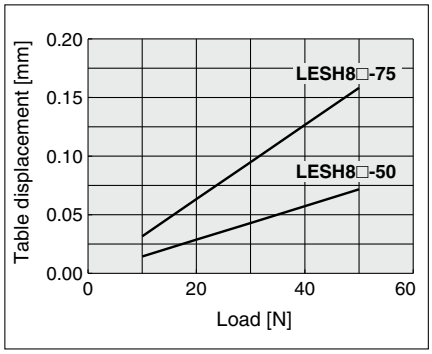

LESH8

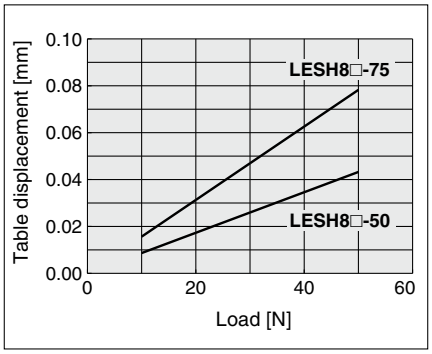

LESH8

Lr = 70 mm

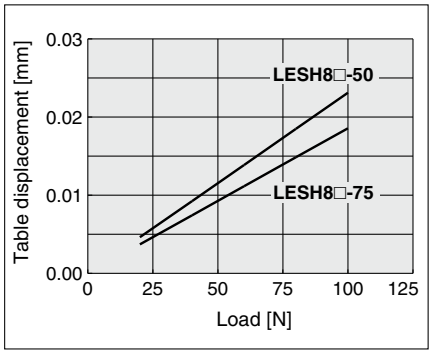

LESH16

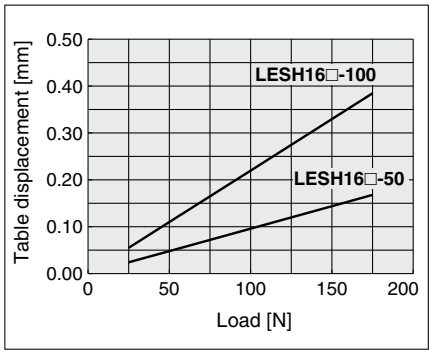

LESH16

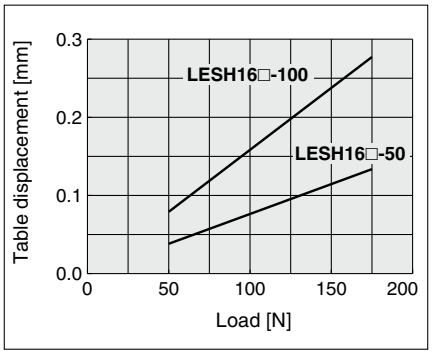

LESH16

Lr = 120 mm

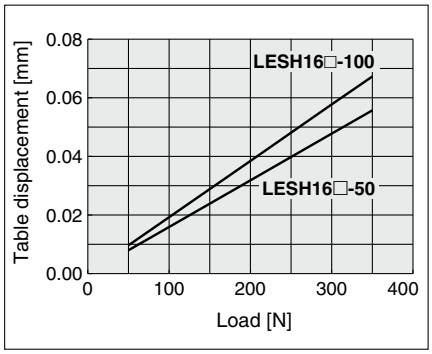

LESH25

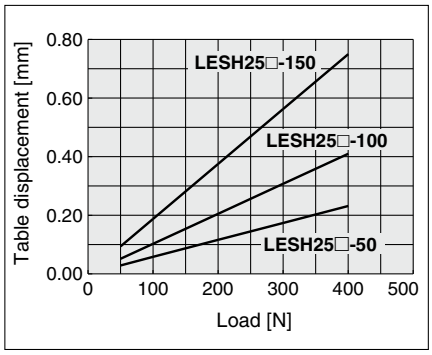

LESH25

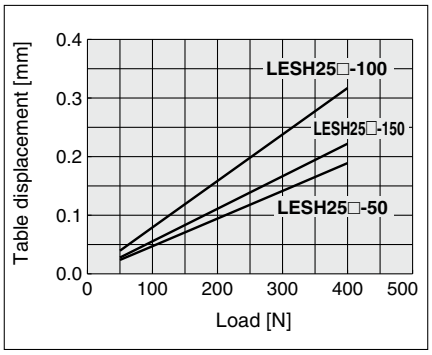

LESH25

Lr = 200 mm

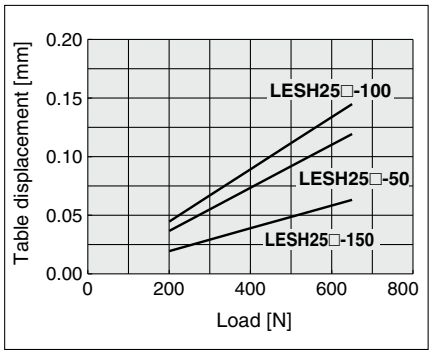

Step Motor (Servo/24 VDC) Servo Motor (24 VDC)

Electric Slide Table/ High Rigidity Type

Series LESH LESH8, 16, 25

How to Order

LESH 8 R ☐ J – 50 ☐ ☐ ☐ – S 1 6N 1 ☐

❶ ❷ ❸ ❹ ❺ ❻ ❼ ❽ ❾ ❿ ⓫ ⓬ ⓭

❶ Size

8
16
25

❷ Motor mounting position

R — **Basic type/R type**

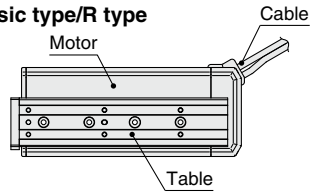

L — **Symmetrical type/L type**

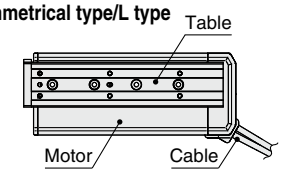

D — **In-line motor type/D type**

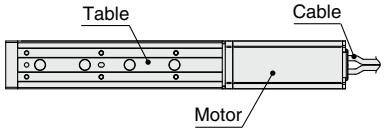

❸ Motor type

Symbol	Type	Compatible controller/ driver
Nil	Step motor (Servo/24 VDC)	LECP6 LECP1 LECPA LECPMJ
A	Servo motor* (24 VDC)	LECA6

* LESH25DA is not available.

⚠ Caution

[CE-compliant products]

① EMC compliance was tested by combining the electric actuator LES series and the controller LEC series.
The EMC depends on the configuration of the customer's control panel and the relationship with other electrical equipment and wiring. Therefore, conformity to the EMC directive cannot be certified for SMC components incorporated into the customer's equipment under actual operating conditions. As a result, it is necessary for the customer to verify conformity to the EMC directive for the machinery and equipment as a whole.

② For the servo motor (24 VDC) specification, EMC compliance was tested by installing a noise filter set (LEC-NFA).
Refer to page 559 for the noise filter set.
Refer to the LECA Operation Manual for installation.

③ CC-Link direct input type (LECPMJ) is not CE-compliant.

[UL-compliant products]

When conformity to UL is required, the electric actuator and controller/driver should be used with a UL1310 Class 2 power supply.

❹ Lead [mm]

Symbol	LESH8	LESH16	LESH25
J	8	10	16
K	4	5	8

❺ Stroke [mm]

Model \ Stroke	50	75	100	150
LESH8	●*	●	—	—
LESH16	●*	—	●	—
LESH25	●	—	●	●

* R/L type with lock is not available.

❻ Motor option

Nil	Without option
B	With lock

❼ Body option

Nil	Without option
S	Dust-protected*

* For R/L type (IP5X equivalent), a scraper is mounted on the rod cover, and gaskets are mounted on both the end covers. For D type, a scraper is mounted on the rod cover.

The actuator and controller/driver are sold as a package.

Confirm that the combination of the controller/driver and the actuator is correct.

<Check the following before use.>

① Check the actuator label for model number. This matches the controller/driver.

② Check Parallel I/O configuration matches (NPN or PNP).

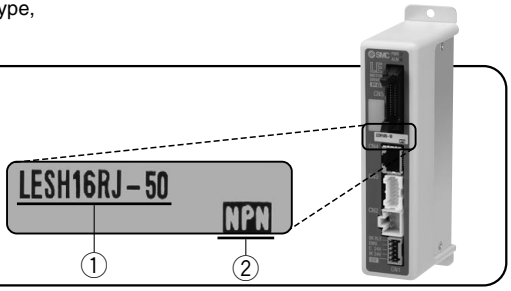

* Refer to the operation manual for using the products. Please download it via our website, http://www.smcworld.com

Basic type (R type)

Symmetrical type (L type)

In-line motor type (D type)

❽ Mounting*

Symbol	Mounting	R type L type	D type
Nil	Without side holder	●	●
H	With side holder (4 pcs.)	—	●

* Refer to page 356 for details.

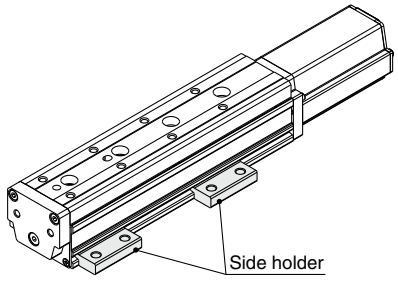

❾ Actuator cable type*1

Nil	Without cable
S	Standard cable*2
R	Robotic cable (Flexible cable)*3

*1 The standard cable should be used on fixed parts. For using on moving parts, select the robotic cable.
*2 Only available for the motor type "Step motor."
*3 Fix the motor cable protruding from the actuator to keep it unmovable. For details about fixing method, refer to Wiring/Cables in the Electric Actuators Precautions.

❿ Actuator cable length [m]

Nil	Without cable
1	1.5
3	3
5	5
8	8*
A	10*
B	15*
C	20*

* Produced upon receipt of order (Robotic cable only) Refer to the specifications Note 3) on page 343.

⓫ Controller/Driver type*1

Nil	Without controller/driver	
6N	**LECP6/LECA6** (Step data input type)	NPN
6P		PNP
1N	**LECP1***2 (Programless type)	NPN
1P		PNP
MJ	**LECPMJ***2 *3 (CC-Link direct input type)	—
AN	**LECPA***2 *4 (Pulse input type)	NPN
AP		PNP

*1 For details about controller/driver and compatible motor, refer to the compatible controller/driver below.
*2 Only available for the motor type "Step motor."
*3 Not applicable to CE.
*4 When pulse signals are open collector, order the current limiting resistor (LEC-PA-R-□) on page 587 separately.

⓬ I/O cable length*1, Communication plug

Nil	Without cable (Without communication plug connector)*3
1	1.5 m
3	3 m*2
5	5 m*2
S	Straight type communication plug connector*3
T	T-branch type communication plug connector*3

*1 When "Without controller/driver" is selected for controller/driver types, I/O cable cannot be selected. Refer to page 559 (For LECP6/LECA6), page 573 (For LECP1) or page 587 (For LECPA) if I/O cable is required.
*2 When "Pulse input type" is selected for controller/driver types, pulse input usable only with differential. Only 1.5 m cables usable with open collector.
*3 For the LECPMJ, only "Nil", "S" and "T" are selectable since I/O cable is not included.

⓭ Controller/Driver mounting

Nil	Screw mounting
D	DIN rail mounting*

* DIN rail is not included. Order it separately.

Compatible Controller/Driver

Type	**Step data input type**	**Step data input type**	**CC-Link direct input type**	**Programless type**	**Pulse input type**
Series	**LECP6**	**LECA6**	**LECPMJ**	**LECP1**	**LECPA**
Features	Value (Step data) input Standard controller		CC-Link direct input	Capable of setting up operation (step data) without using a PC or teaching box	Operation by pulse signals
Compatible motor	Step motor (Servo/24 VDC)	Servo motor (24 VDC)	Step motor (Servo/24 VDC)		
Maximum number of step data	64 points			14 points	—
Power supply voltage	24 VDC				
Reference page	Page 551	Page 551	Page 591	Page 567	Page 581

Specifications

Step Motor (Servo/24 VDC)

Model			LESH8□		LESH16□		LESH25□	
Actuator specifications	Stroke [mm]		50, 75		50, 100		50, 100, 150	
	Work load [kg] Note 1) 3)	Horizontal	2	1	8	5	12	8
		Vertical	0.5	0.25	2	1	4	2
	Pushing force [N] 30% to 70% Note 2) 3)		6 to 15	4 to 10	23.5 to 55	15 to 35	77 to 180	43 to 100
	Speed [mm/s] Note 1) 3)		10 to 200	20 to 400	10 to 200	20 to 400	10 to 150	20 to 400
	Pushing speed [mm/s]		10 to 20	20	10 to 20	20	10 to 20	20
	Max. acceleration/deceleration [mm/s²]		5000					
	Positioning repeatability [mm]		±0.05					
	Lost motion [mm] Note 4)		0.15 or less					
	Screw lead [mm]		4	8	5	10	8	16
	Impact/Vibration resistance [m/s²] Note 5)		50/20					
	Actuation type		Slide screw + Belt (R/L type), Slide screw (D type)					
	Guide type		Linear guide (Circulating type)					
	Operating temperature range [°C]		5 to 40					
	Operating humidity range [%RH]		90 or less (No condensation)					
Electric specifications	Motor size		□20		□28		□42	
	Motor type		Step motor (Servo/24 VDC)					
	Encoder		Incremental A/B phase (800 pulse/rotation)					
	Rated voltage [V]		24 VDC ±10%					
	Power consumption [W] Note 6)		20		43		67	
	Standby power consumption when operating [W] Note 7)		7		15		13	
	Max. instantaneous power consumption [W] Note 8)		35		60		74	
Lock unit specifications	Type	Note 9)	Non-magnetizing lock					
	Holding force [N]		24	2.5	300	48	500	77
	Power consumption [W] Note 10)		4		3.6		5	
	Rated voltage [V]		24 VDC ±10%					

Note 1) Speed changes according to the work load. Check “Speed–Work Load Graph (Guide)” on page 332.
Note 2) Pushing force accuracy is ±20% (F.S.).
Note 3) The speed and force may change depending on the cable length, load and mounting conditions. Furthermore, if the cable length exceeds 5 m, then it will decrease by up to 10% for each 5 m. (At 15 m: Reduced by up to 20%)
Note 4) A reference value for correcting an error in reciprocal operation.
Note 5) Vibration resistance: No malfunction occurred in a test ranging between 45 to 2000 Hz. Test was performed in both an axial direction and a perpendicular direction to the lead screw. (Test was performed with the actuator in the initial state.)
Impact resistance: No malfunction occurred when the actuator was tested with a drop tester in both an axial direction and a perpendicular direction to the lead screw. (Test was performed with the actuator in the initial state.)
Note 6) The power consumption (including the controller) is for when the actuator is operating.
Note 7) The standby power consumption when operating (including the controller) is for when the actuator is stopped in the set position during the operation. Except during the pushing operation.
Note 8) The maximum instantaneous power consumption (including the controller) is for when the actuator is operating. This value can be used for the selection of the power supply.
Note 9) With lock only
Note 10) For an actuator with lock, add the power consumption for the lock.

Specifications

Servo Motor (24 VDC)

Model			LESH8□A		LESH16□A		LESH25$^{R}_{L}$A Note 1)	
Actuator specifications	Stroke [mm]		50, 75		50, 100		50, 100, 150	
	Work load [kg]	Horizontal	2	1	5	2.5	6	4
		Vertical	0.5	0.25	2	1	2.5	1.5
	Pushing force 50 to 100% [N] Note 2)		7.5 to 11	5 to 7.5	17.5 to 35	10 to 20	31 to 62	19 to 38
	Speed [mm/s]		1 to 200	1 to 400	1 to 200	1 to 400	1 to 150	1 to 400
	Pushing speed [mm/s] Note 2)		1 to 20					
	Max. acceleration/deceleration [mm/s²]		5000					
	Positioning repeatability [mm]		±0.05					
	Lost motion [mm] Note 3)		0.15 or less					
	Screw lead [mm]		4	8	5	10	8	16
	Impact/Vibration resistance [m/s²] Note 4)		50/20					
	Actuation type		Slide screw + Belt (R/L type), Slide screw (D type)					
	Guide type		Linear guide (Circulating type)					
	Operating temperature range [°C]		5 to 40					
	Operating humidity range [%RH]		90 or less (No condensation)					
Electric specifications	Motor size		□20		□28		□42	
	Motor output [W]		10		30		36	
	Motor type		Servo motor (24 VDC)					
	Encoder		Incremental A/B (800 pulse/rotation)/Z phase					
	Rated voltage [V]		24 VDC ±10%					
	Power consumption [W] Note 5)		58		84		144	
	Standby power consumption when operating [W] Note 6)		4 (Horizontal)/7 (Vertical)		2 (Horizontal)/15 (Vertical)		4 (Horizontal)/43 (Vertical)	
	Max. instantaneous power consumption [W] Note 7)		84		124		158	
Lock unit specifications	Type	Note 8)	Non-magnetizing lock					
	Holding force [N]	Note 8)	24	2.5	300	48	500	77
	Power consumption [W] Note 9)	Note 8)	4		3.6		5	
	Rated voltage [V]	Note 8)	24 VDC ±10%					

Note 1) LESH25DA is not available.
Note 2) The pushing force values for LESH8□A is 50% to 75%. Pushing force accuracy is ±20% (F.S.).
Note 3) A reference value for correcting an error in reciprocal operation.
Note 4) Vibration resistance: No malfunction occurred in a test ranging between 45 to 2000 Hz. Test was performed in both an axial direction and a perpendicular direction to the lead screw. (Test was performed with the actuator in the initial state.)
Impact resistance: No malfunction occurred when the actuator was tested with a drop tester in both an axial direction and a perpendicular direction to the lead screw. (Test was performed with the actuator in the initial state.)
Note 5) The power consumption (including the controller) is for when the actuator is operating.
Note 6) The standby power consumption when operating (including the controller) is for when the actuator is stopped in the set position during the operation. Except during the pushing operation.
Note 7) The maximum instantaneous power consumption (including the controller) is for when the actuator is operating. This value can be used for the selection of the power supply.
Note 8) With lock only
Note 9) For an actuator with lock, add the power consumption for the lock.

Weight

Step Motor (Servo/24 VDC), Servo Motor (24 VDC) Common

Model		Basic type/R type, Symmetrical type/L type							In-line motor type/D type						
		LESH8$^{R}_{L}$(A)		LESH16$^{R}_{L}$(A)		LESH25$^{R}_{L}$(A)			LESH8D(A)		LESH16D(A)		LESH25D		
Stroke [mm]		50	75	50	100	50	100	150	50	75	50	100	50	100	150
Product weight [kg]	Without lock	0.55	0.70	1.15	1.60	2.50	3.30	4.26	0.57	0.70	1.25	1.70	2.52	3.27	3.60
	With lock	—	0.76	—	1.71	2.84	3.64	4.60	0.63	0.76	1.36	1.81	2.86	3.61	3.94

Construction: Basic Type/R Type, Symmetrical Type/L Type

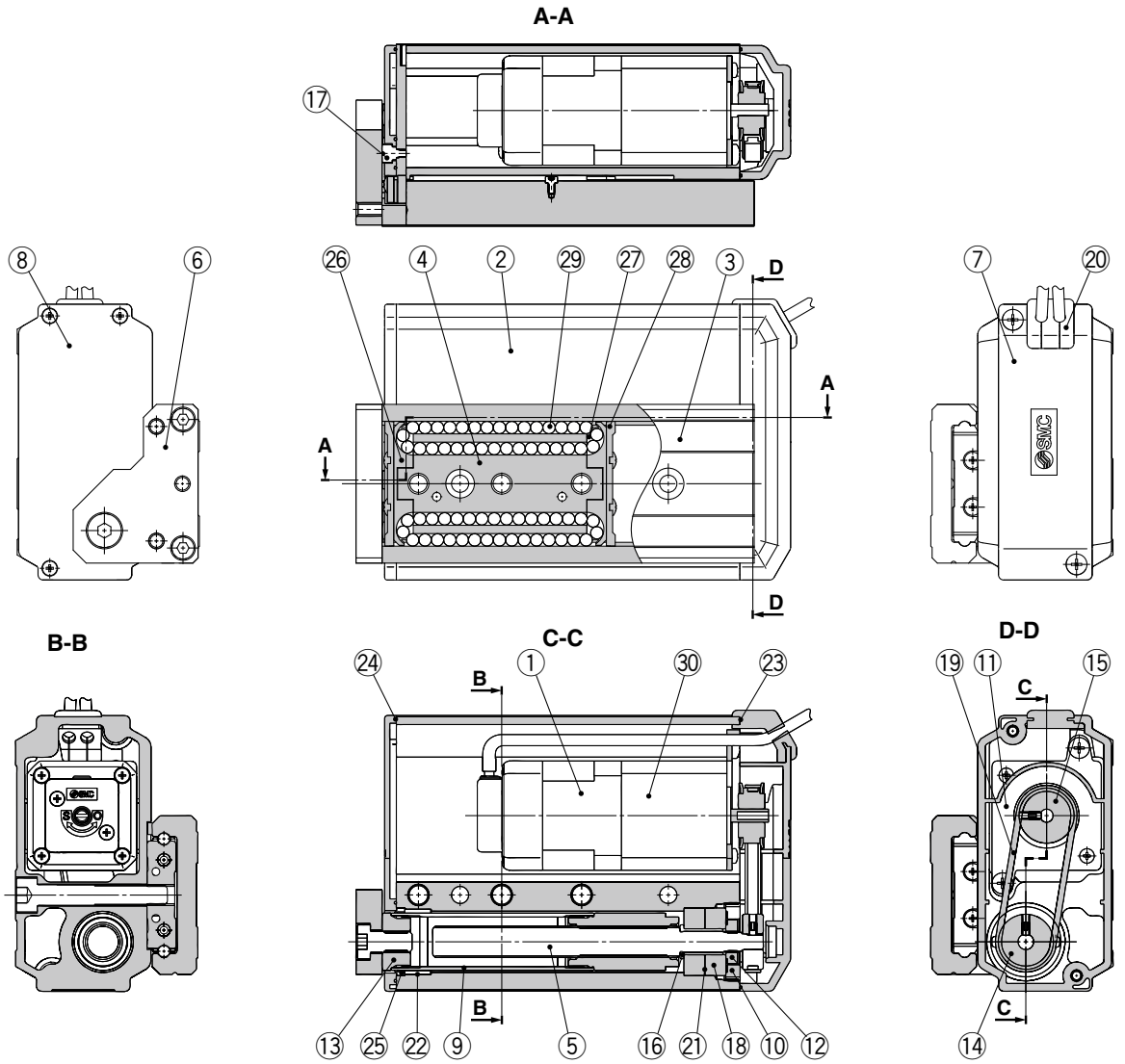

Component Parts

No.	Description	Material	Note
1	**Motor**	—	—
2	**Body**	Aluminum alloy	Anodized
3	**Table**	Stainless steel	Heat treatment + Electroless nickel plating
4	**Guide block**	Stainless steel	Heat treatment
5	**Lead screw**	Stainless steel	Heat treatment + Specially treated
6	**End plate**	Aluminum alloy	Anodized
7	**Pulley cover**	Synthetic resin	—
8	**End cover**	Synthetic resin	—
9	**Rod**	Stainless steel	—
10	**Bearing stopper**	Structural steel	Electroless nickel plating
		Brass	Electroless nickel plating (LESH25R/L□ only)
11	**Motor plate**	Structural steel	
12	**Lock nut**	Structural steel	Chromate treated
13	**Socket**	Structural steel	Electroless nickel plating
14	**Lead screw pulley**	Aluminum alloy	—
15	**Motor pulley**	Aluminum alloy	—
16	**Spacer**	Stainless steel	LESH25R/L□ only
17	**Origin stopper**	Structural steel	Electroless nickel plating
18	**Bearing**	—	—
19	**Belt**	—	—
20	**Grommet**	Synthetic resin	—
21	**Sim ring**	Structural steel	—

No.	Description	Material	Note
22	**Bushing**	—	Dust-protected option only
23	**Pulley gasket**	NBR	Dust-protected option only
24	**End gasket**	NBR	Dust-protected option only
25	**Scraper**	NBR	Dust-protected option only/Rod
26	**Cover**	Synthetic resin	—
27	**Return guide**	Synthetic resin	—
28	**Scraper**	Stainless steel + NBR	Linear guide
29	**Steel ball**	Special steel	—
30	**Lock**	—	With lock only

Replacement Parts/Belt

Model	Order no.
LESH8□	LE-D-1-1
LESH16□	LE-D-1-2
LESH25□	LE-D-1-3
LESH25□A	LE-D-1-4

Replacement Parts/Grease Pack

Applied portion	Order no.
Guide unit	GR-S-010 (10 g) GR-S-020 (20 g)

Construction: In-line Motor Type/D Type

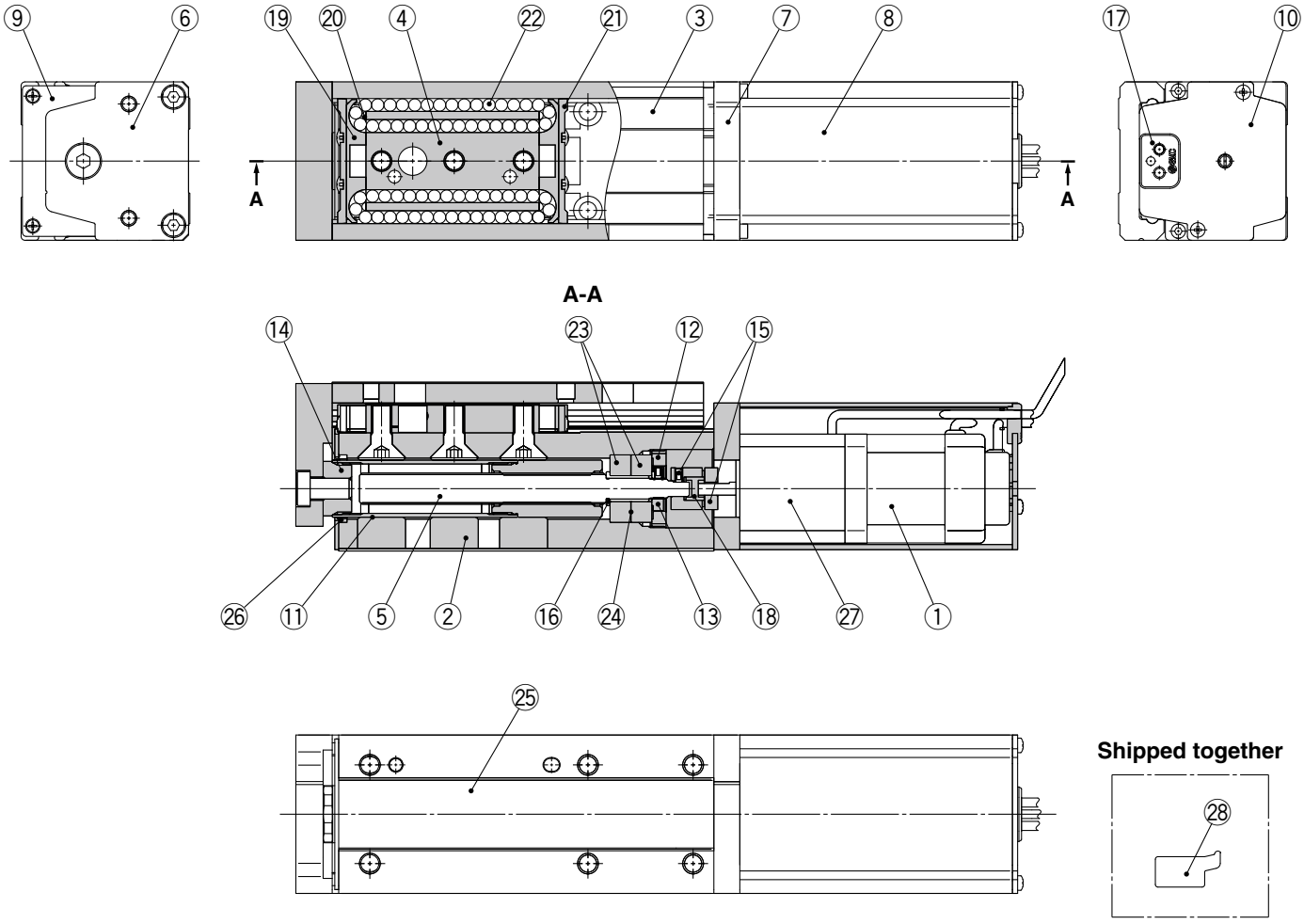

Component Parts

No.	Description	Material	Note
1	**Motor**	—	—
2	**Body**	Aluminum alloy	Anodized
3	**Table**	Stainless steel	Heat treatment + Electroless nickel plating
4	**Guide block**	Stainless steel	Heat treatment
5	**Lead screw**	Stainless steel	Heat treatment + Specially treated
6	**End plate**	Aluminum alloy	Anodized
7	**Motor flange**	Aluminum alloy	Anodized
8	**Motor cover**	Aluminum alloy	Anodized
9	**End cover**	Aluminum alloy	Anodized
10	**Motor end cover**	Aluminum alloy	Anodized
11	**Rod**	Stainless steel	—
12	**Bearing stopper**	Structural steel	Electroless nickel plating
		Brass	Electroless nickel plating (LESH25D□ only)
13	**Socket**	Structural steel	Electroless nickel plating
14	**Hub (Lead screw side)**	Aluminum alloy	—
15	**Hub (Motor side)**	Aluminum alloy	—
16	**Spacer**	Stainless steel	LESH25D□ only
17	**Grommet**	NBR	—
18	**Spider**	NBR	—
19	**Cover**	Synthetic resin	—
20	**Return guide**	Synthetic resin	—
21	**Scraper**	Stainless steel + NBR	Linear guide
22	**Steel ball**	Special steel	—
23	**Bearing**	—	—
24	**Sim ring**	Structural steel	—
25	**Masking tape**	—	—
26	**Scraper**	NBR	Dust-protected option only/ Rod
27	**Lock**	—	With lock only
28	**Side holder**	Aluminum alloy	Anodized

Optional Parts/Side Holder

Model	Order no.
LESH8D	LE-D-3-1
LESH16D	LE-D-3-2
LESH25D	LE-D-3-3

Replacement Parts/Grease Pack

Applied portion	Order no.
Guide unit	GR-S-010 (10 g) GR-S-020 (20 g)

Dimensions: Basic Type/R Type

LESH8R

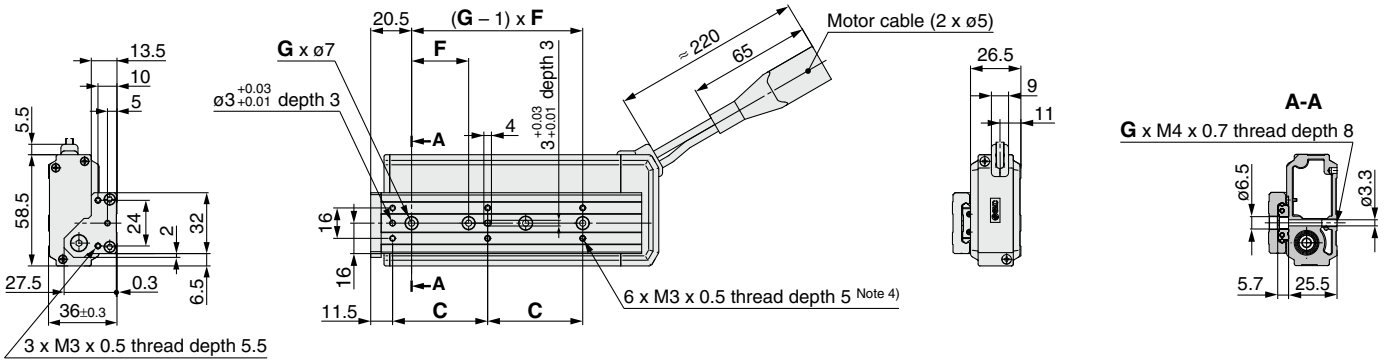

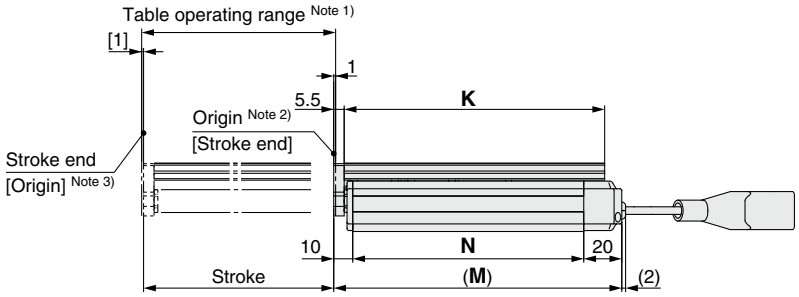

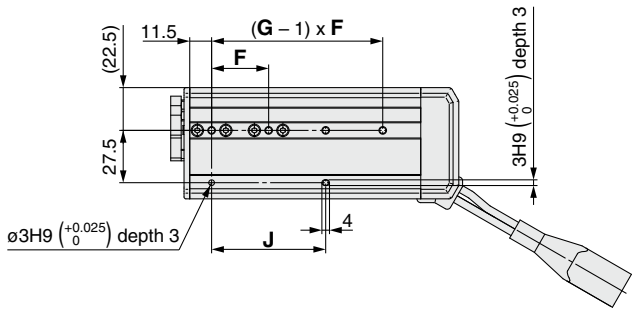

With lock

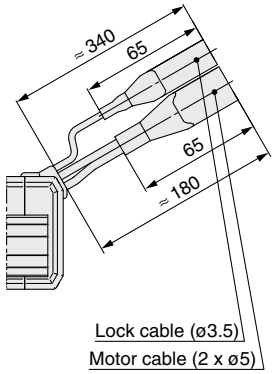

Connector

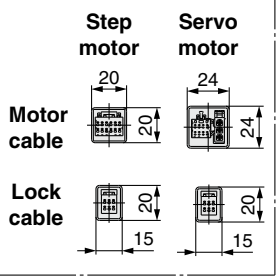

[mm]

Model	C	F	G	J	K	M	N
LESH8R□□-50□□-□□□□□	46	29	3	58	111	125.5	95.5
LESH8R□□-75□□-□□□□□	50	30	4	60	137	151.5	121.5

Note 1) Range within which the table can move when it returns to origin. Make sure a workpiece mounted on the table does not interfere with the workpieces and facilities around the table.
Note 2) Position after return to origin.
Note 3) [ ] for when the direction of return to origin has changed.
Note 4) If workpiece retaining screws are too long, they can touch the guide block and cause a malfunction. Use screws that are between the maximum and minimum screw-in depths in length.

Dimensions: Basic Type/R Type

LESH16R

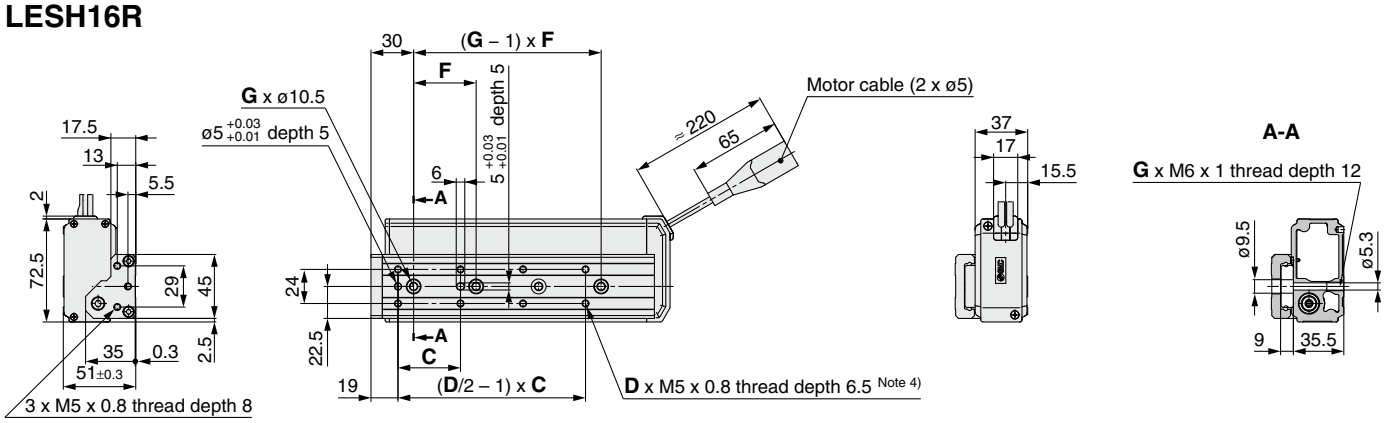

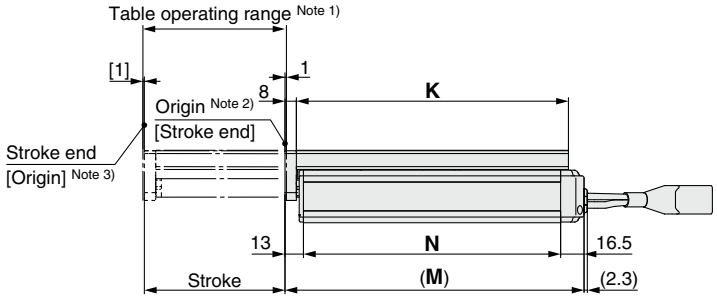

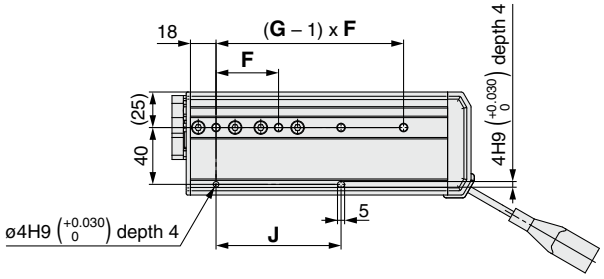

With lock

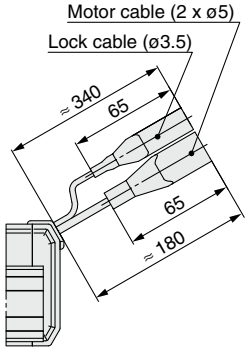

Connector

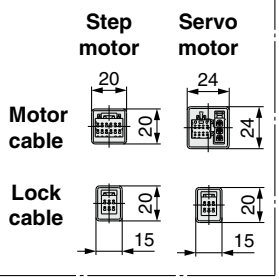

[mm]

Model	C	D	F	G	J	K	M	N
LESH16R□□-50□□-□□□□□	40	6	45	2	45	116.5	135.5	106
LESH16R□□-100□□-□□□□□	44	8	44	4	88	191.5	210.5	181

Note 1) Range within which the table can move when it returns to origin. Make sure a workpiece mounted on the table does not interfere with the workpieces and facilities around the table.
Note 2) Position after return to origin.
Note 3) [ ] for when the direction of return to origin has changed.
Note 4) If workpiece retaining screws are too long, they can touch the guide block and cause a malfunction. Use screws that are between the maximum and minimum screw-in depths in length.

Dimensions: Basic Type/R Type

LESH25R

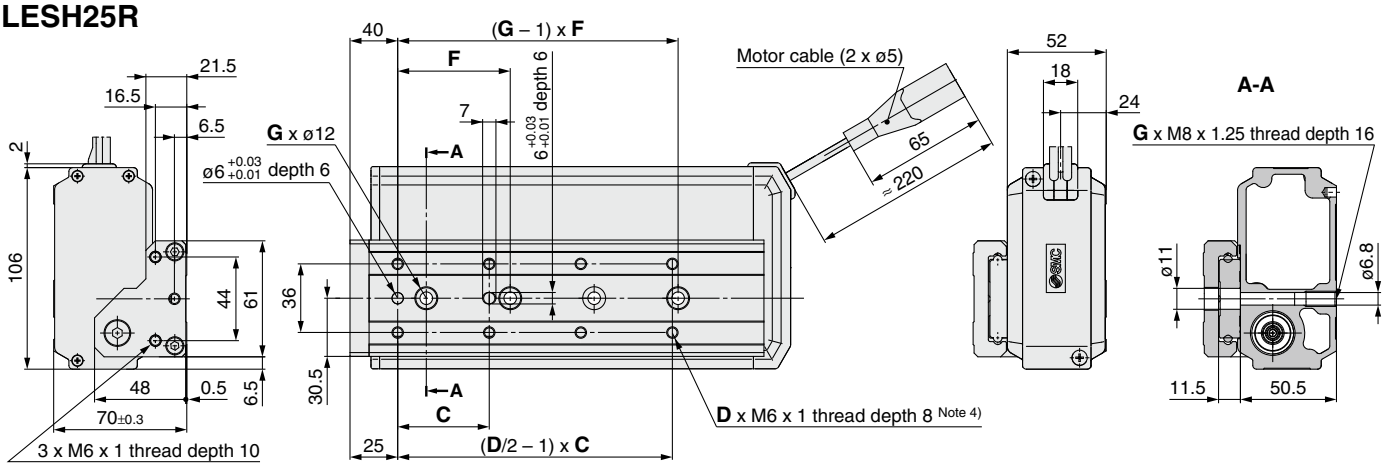

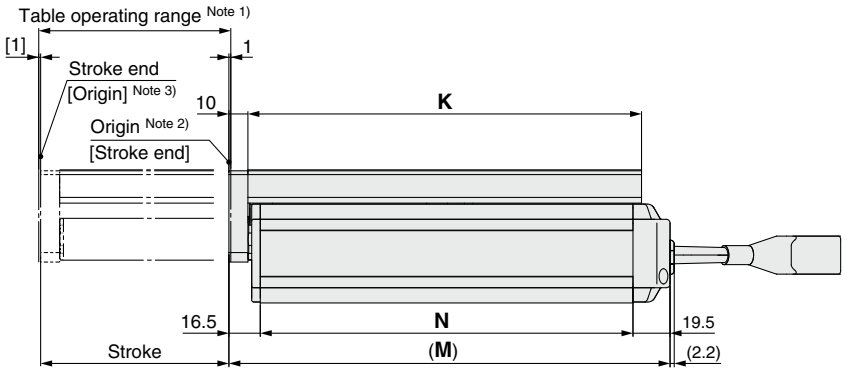

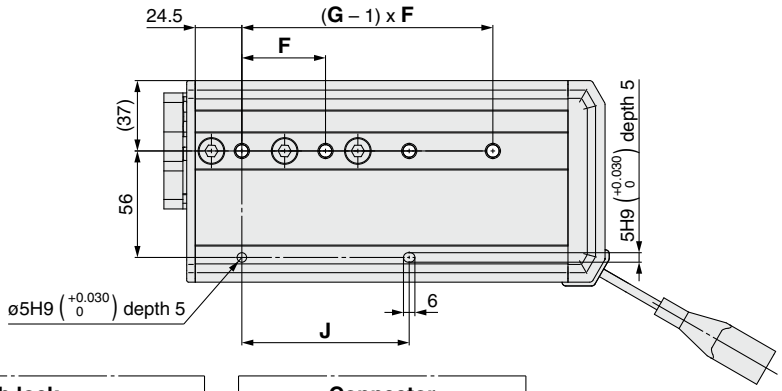

With lock

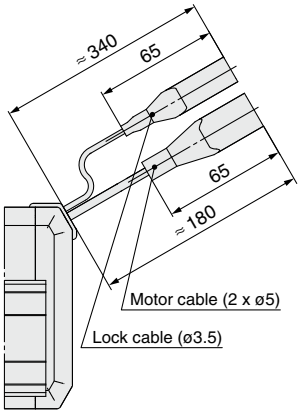

Connector

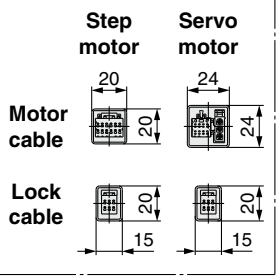

[mm]

Model	C	D	F	G	J	K	M	N
LESH25R□□-50□□-□□□□□	75	4	80	2	80	143	168	132
LESH25R□□-100□□-□□□□□	48	8	44	4	88	207	232	196
LESH25R□□-150□□-□□□□□	65	8	66	4	132	285	310	274

Note 1) Range within which the table can move when it returns to origin. Make sure a workpiece mounted on the table does not interfere with the workpieces and facilities around the table.
Note 2) Position after return to origin.
Note 3) [ ] for when the direction of return to origin has changed.
Note 4) If workpiece retaining screws are too long, they can touch the guide block and cause a malfunction. Use screws that are between the maximum and minimum screw-in depths in length.

Dimensions: Symmetrical Type/L Type

LESH8L

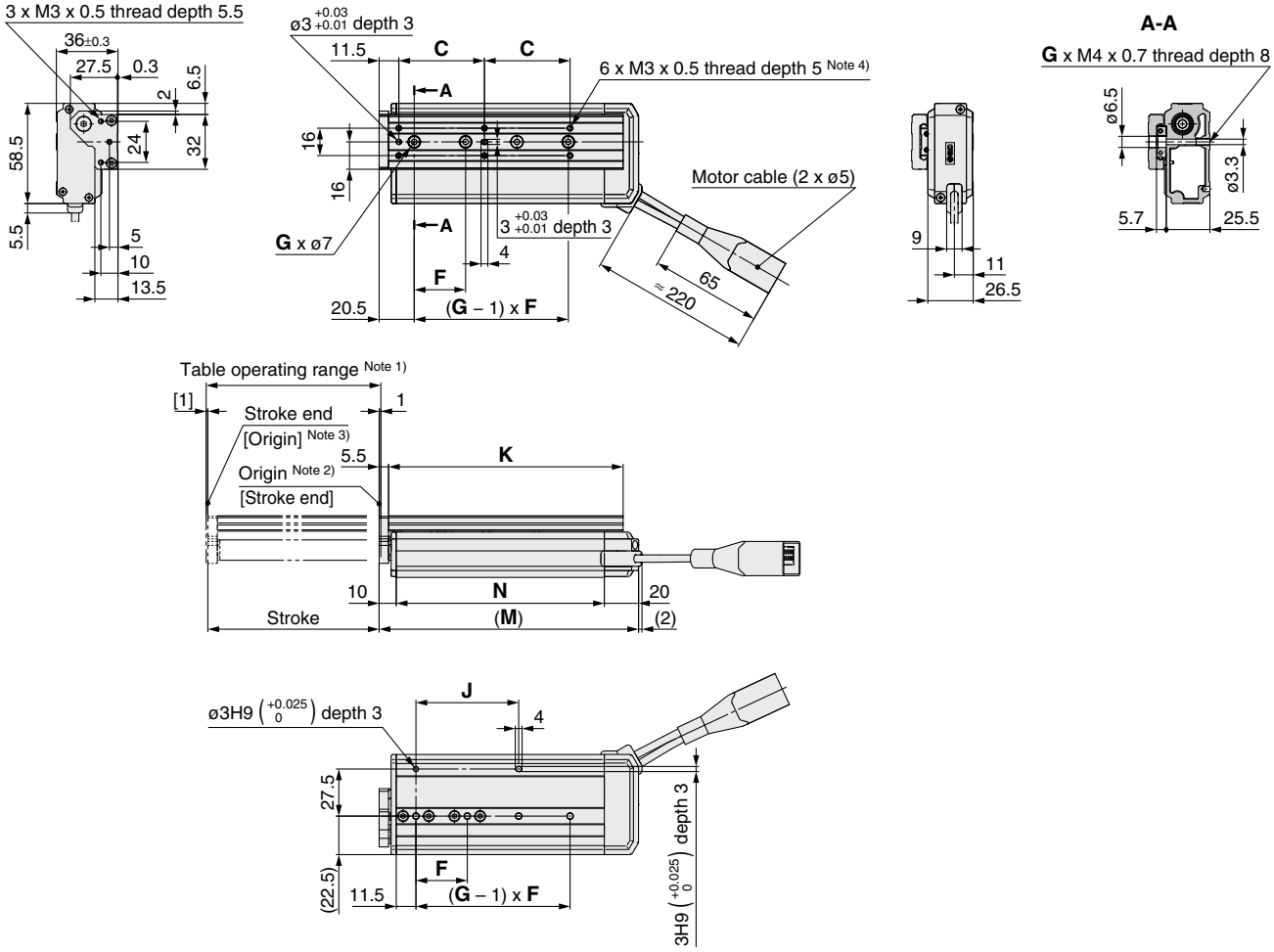

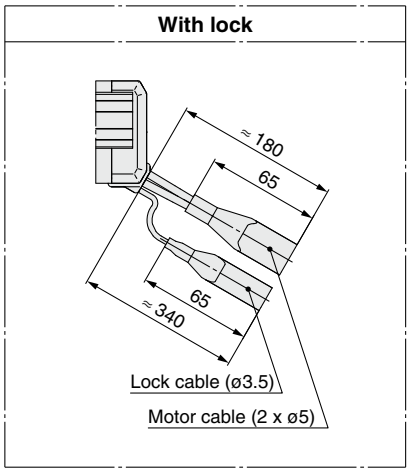

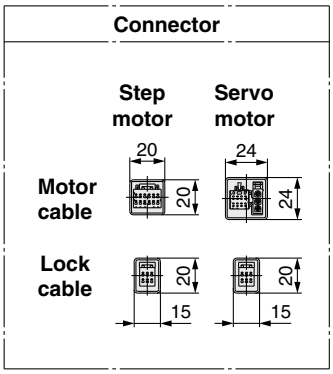

[mm]

Model	C	F	G	J	K	M	N
LESH8L□□-50□□-□□□□□	46	29	3	58	111	125.5	95.5
LESH8L□□-75□□-□□□□□	50	30	4	60	137	151.5	121.5

Note 1) Range within which the table can move when it returns to origin. Make sure a workpiece mounted on the table does not interfere with the workpieces and facilities around the table.
Note 2) Position after return to origin.
Note 3) [ ] for when the direction of return to origin has changed.
Note 4) If workpiece retaining screws are too long, they can touch the guide block and cause a malfunction. Use screws that are between the maximum and minimum screw-in depths in length.

Dimensions: Symmetrical Type/L Type

LESH16L

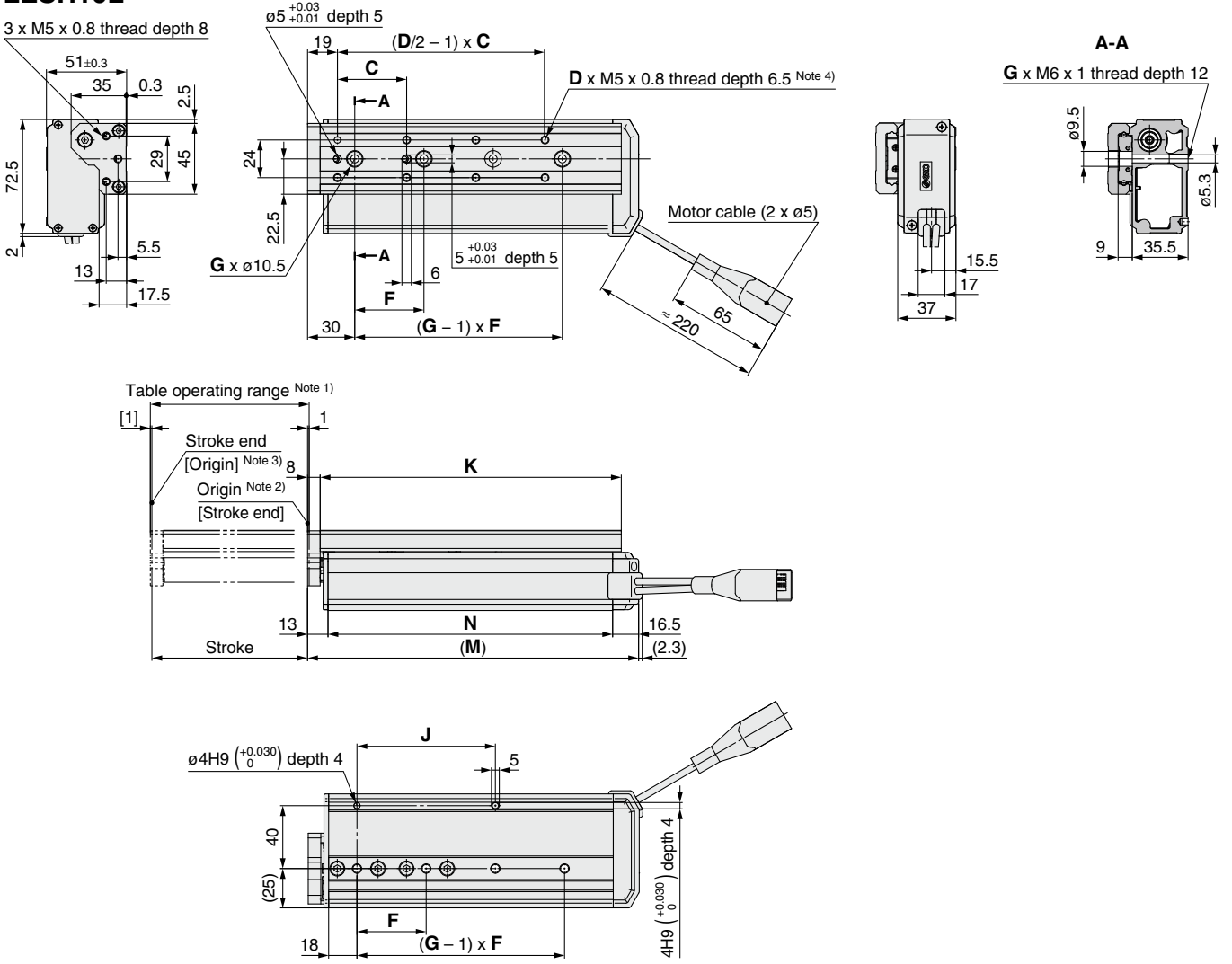

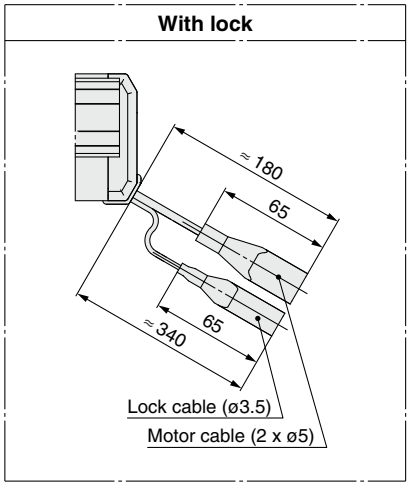

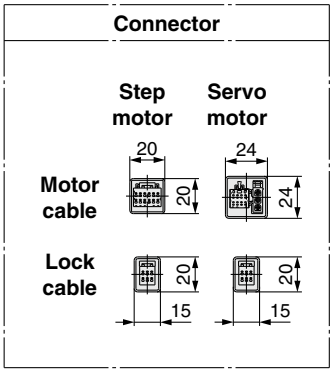

[mm]

Model	C	D	F	G	J	K	M	N
LESH16L□□-50□□-□□□□□	40	6	45	2	45	116.5	135.5	106
LESH16L□□-100□□-□□□□□	44	8	44	4	88	191.5	210.5	181

Note 1) Range within which the table can move when it returns to origin. Make sure a workpiece mounted on the table does not interfere with the workpieces and facilities around the table.
Note 2) Position after return to origin.
Note 3) [ ] for when the direction of return to origin has changed.
Note 4) If workpiece retaining screws are too long, they can touch the guide block and cause a malfunction. Use screws that are between the maximum and minimum screw-in depths in length.

Dimensions: Symmetrical Type/L Type

LESH25L

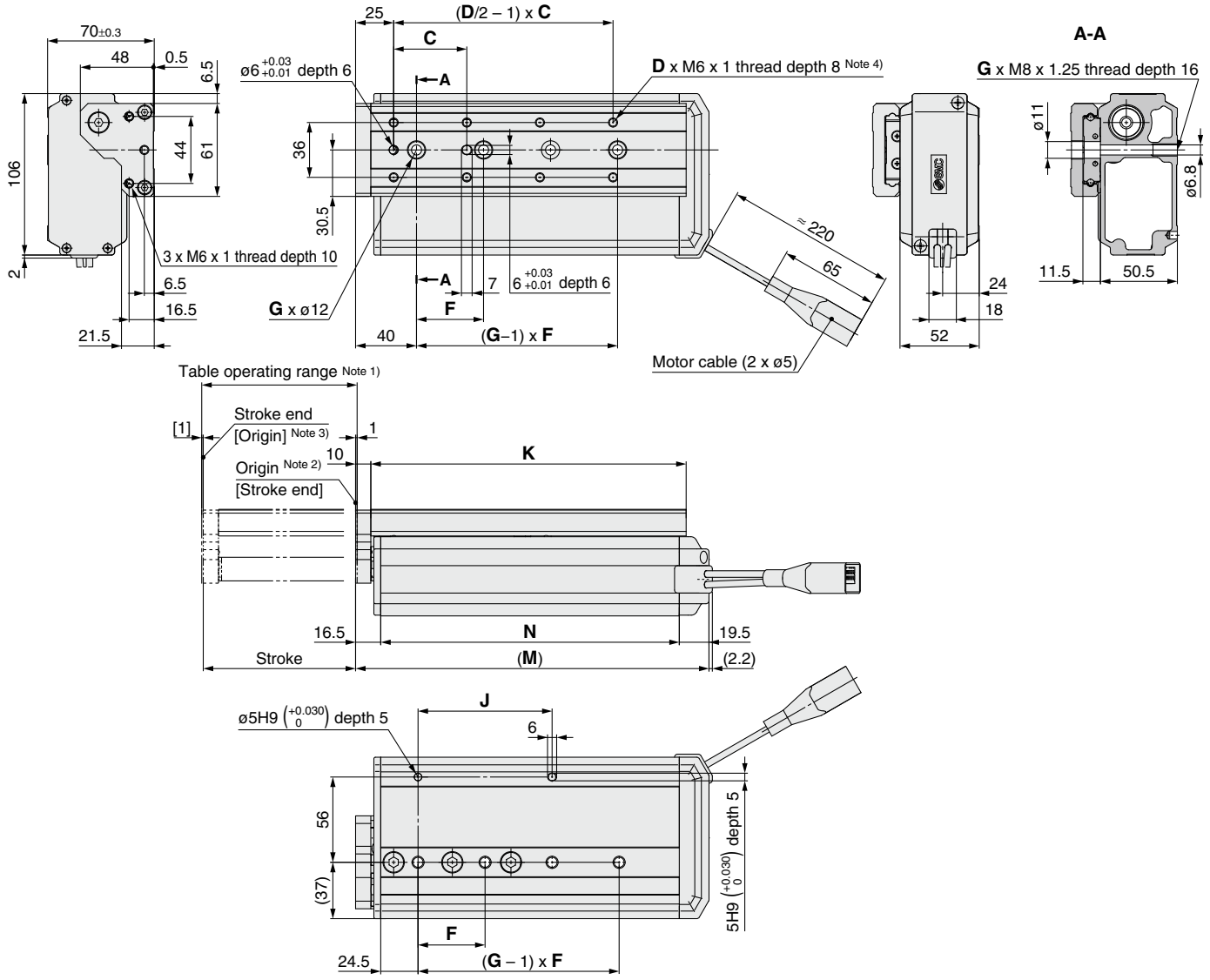

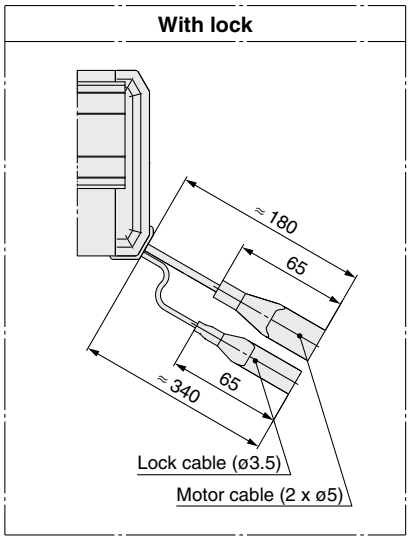

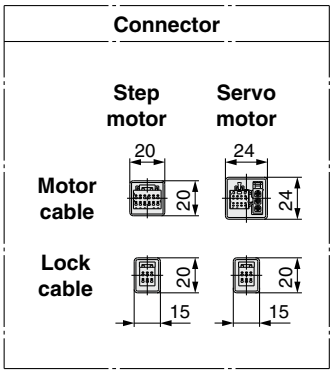

[mm]

Model	C	D	F	G	J	K	M	N
LESH25L□□-50□□-□□□□□	75	4	80	2	80	143	168	132
LESH25L□□-100□□-□□□□□	48	8	44	4	88	207	232	196
LESH25L□□-150□□-□□□□□	65	8	66	4	132	285	310	274

Note 1) Range within which the table can move when it returns to origin. Make sure a workpiece mounted on the table does not interfere with the workpieces and facilities around the table.
Note 2) Position after return to origin.
Note 3) [ ] for when the direction of return to origin has changed.
Note 4) If workpiece retaining screws are too long, they can touch the guide block and cause a malfunction. Use screws that are between the maximum and minimum screw-in depths in length.

Dimensions: In-line Motor Type/D Type

LESH8D

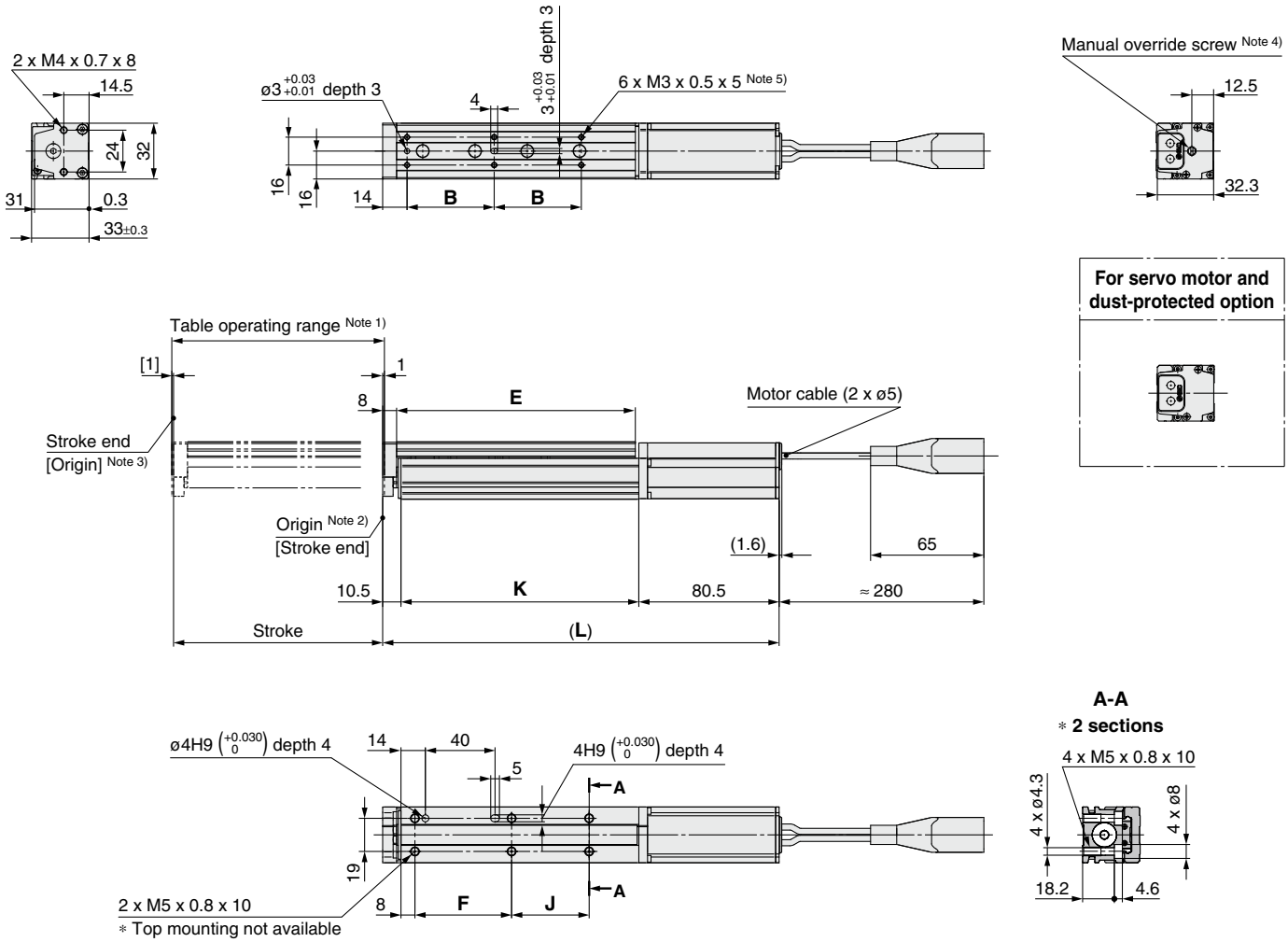

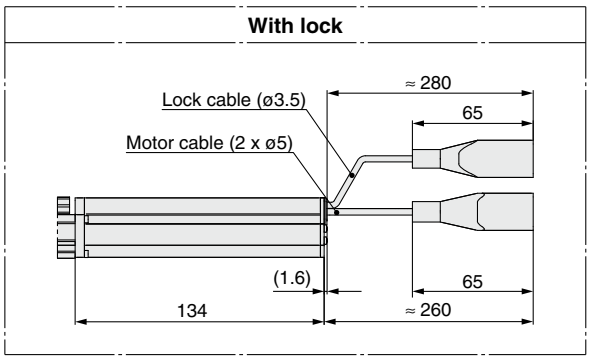

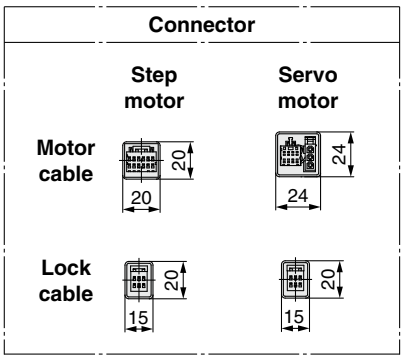

[mm]

Model	L	B	E	F	J	K
LESH8D□□-50□□-□□□□□	201.5	46	111	54.5	19.5	110.5
LESH8D□□-50B□□-□□□□□	255					
LESH8D□□-75□□-□□□□□	227.5	50	137	55.5	44.5	136.5
LESH8D□□-75B□□-□□□□□	281					

Note 1) Range within which the table can move when it returns to origin. Make sure a workpiece mounted on the table does not interfere with the workpieces and facilities around the table.
Note 2) Position after return to origin.
Note 3) [ ] for when the direction of return to origin has changed.
Note 4) The distance between the motor end cover and the manual override screw is up to 16 mm. The motor end cover hole size is ø5.5.
Note 5) If workpiece retaining screws are too long, they can touch the guide block and cause a malfunction. Use screws that are between the maximum and minimum screw-in depths in length.

Dimensions: In-line Motor Type/D Type

LESH16D

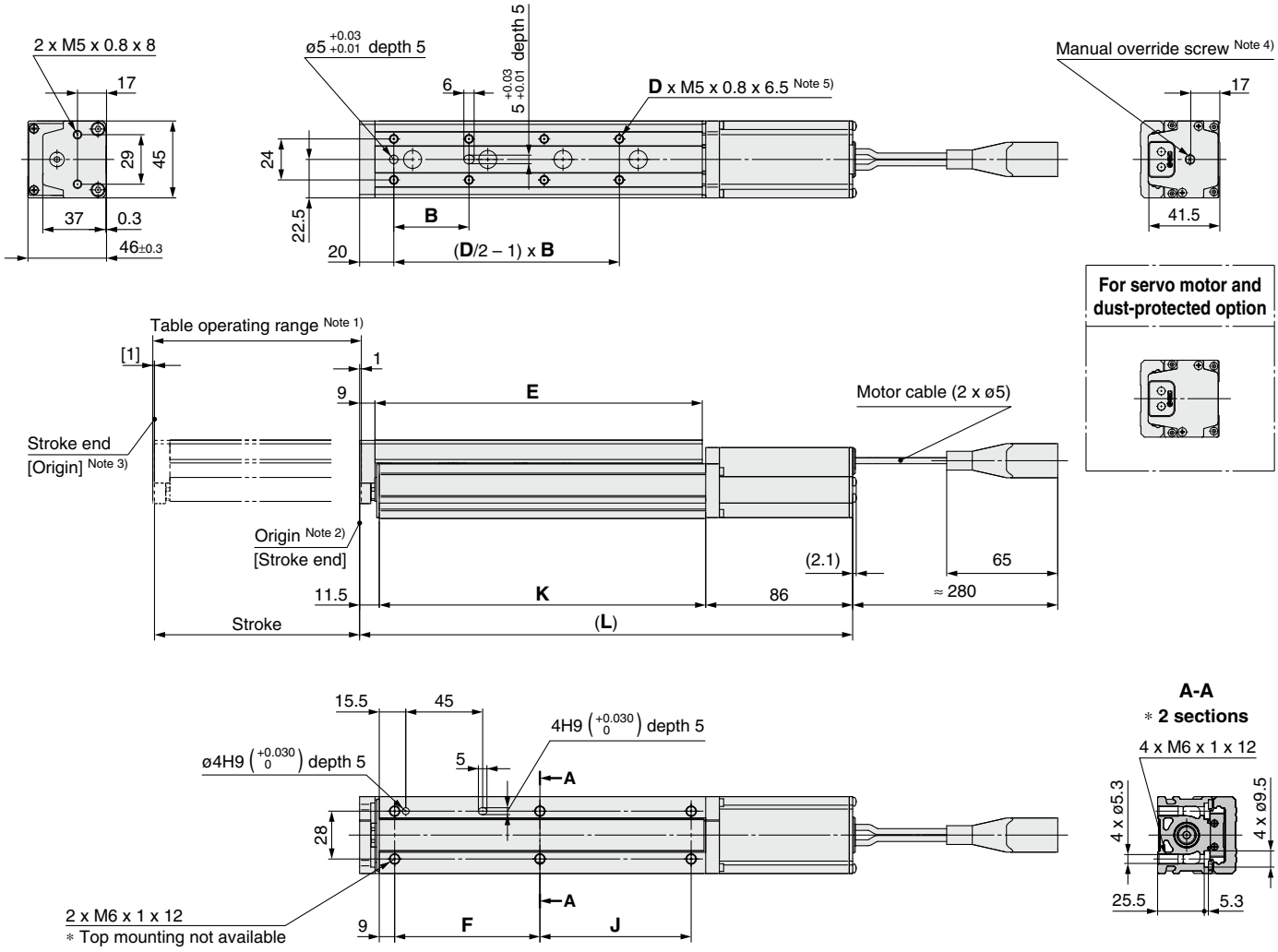

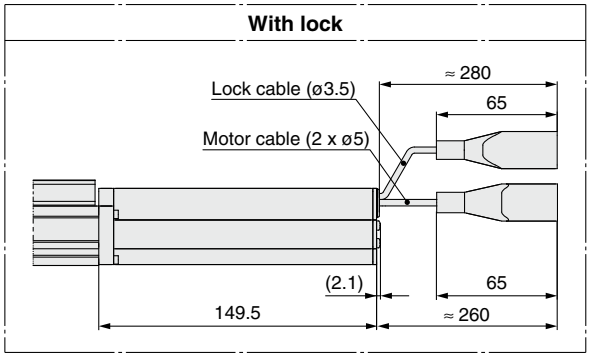

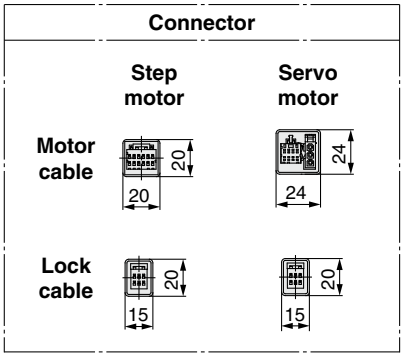

[mm]

Model	L	B	D	E	F	J	K
LESH16D□□-50□□-□□□□□	219.5	40	6	116.5	65	39.5	122
LESH16D□□-50B□□-□□□□□	283						
LESH16D□□-100□□-□□□□□	288.5	44	8	191.5	85	88.5	191
LESH16D□□-100B□□-□□□□□	352						

Note 1) Range within which the table can move when it returns to origin. Make sure a workpiece mounted on the table does not interfere with the workpieces and facilities around the table.
Note 2) Position after return to origin.
Note 3) [ ] for when the direction of return to origin has changed.
Note 4) The distance between the motor end cover and the manual override screw is up to 17 mm. The motor end cover hole size is ø5.5.
Note 5) If workpiece retaining screws are too long, they can touch the guide block and cause a malfunction. Use screws that are between the maximum and minimum screw-in depths in length.

Dimensions: In-line Motor Type/D Type

LESH25D

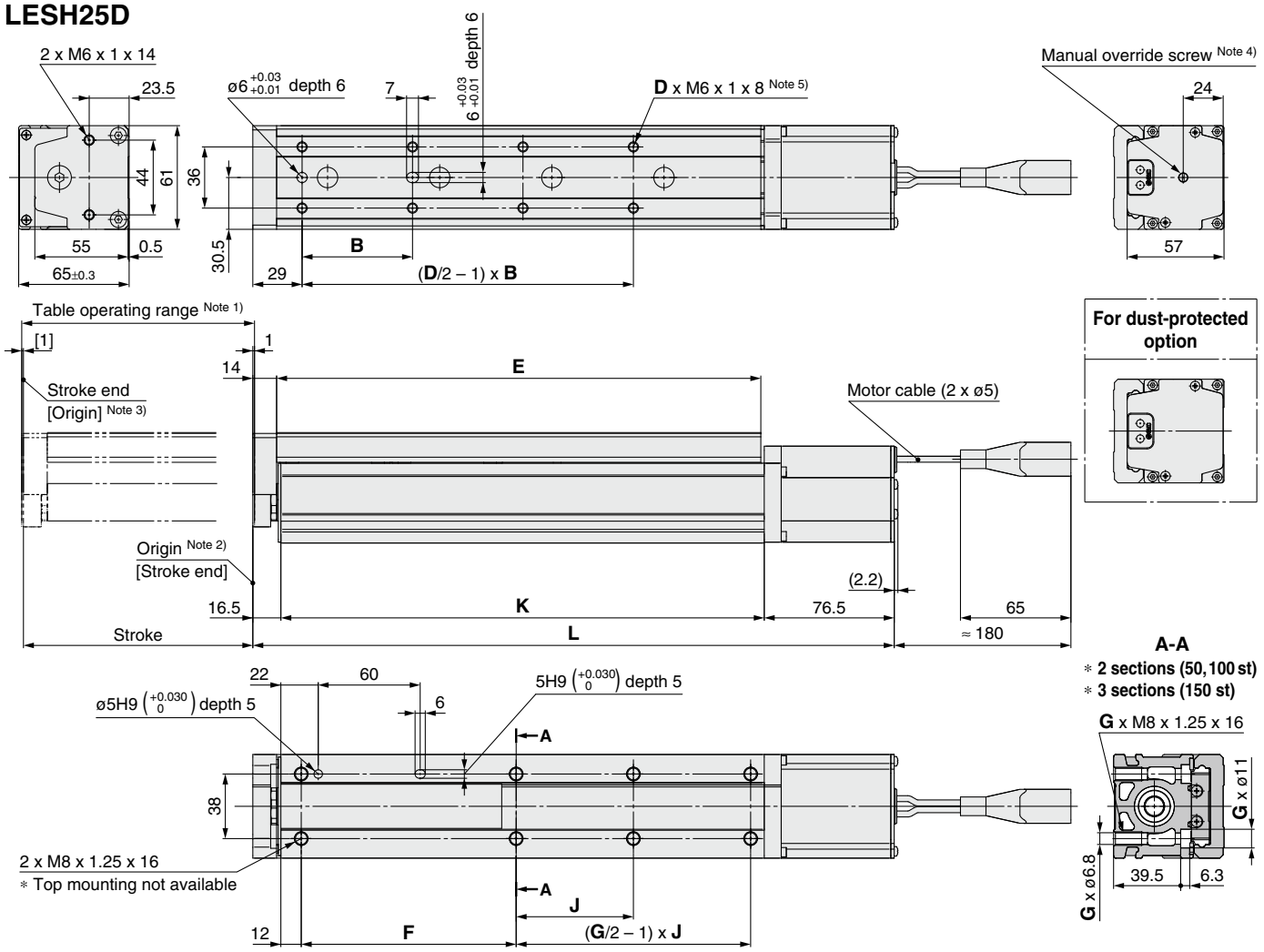

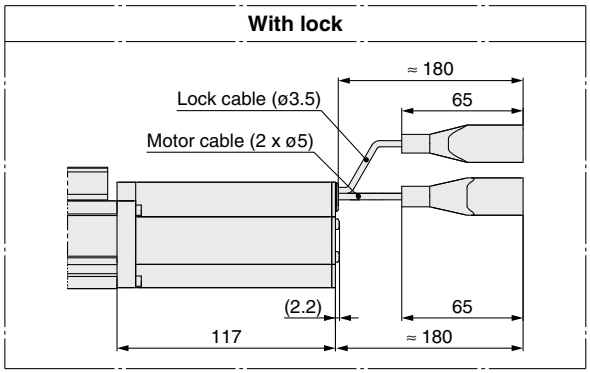

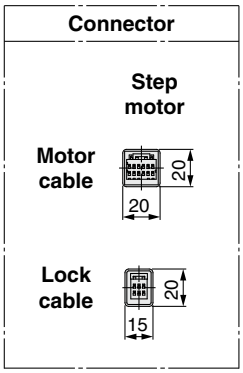

[mm]

Model	L	B	D	E	F	G	J	K
LESH25D□-50□□-□□□□□	237.5	75	4	143	84	4	40.5	144.5
LESH25D□-50B□□-□□□□□	278							
LESH25D□-100□□-□□□□□	299.5	48	8	207	98.5		88	206.5
LESH25D□-100B□□-□□□□□	340							
LESH25D□-150□□-□□□□□	377.5	65		285	126.5	6	69	284.5
LESH25D□-150B□□-□□□□□	418							

Note 1) Range within which the table can move when it returns to origin. Make sure a workpiece mounted on the table does not interfere with the workpieces and facilities around the table.
Note 2) Position after return to origin.
Note 3) [ ] for when the direction of return to origin has changed.
Note 4) The distance between the motor end cover and the manual override screw is up to 4 mm. The motor end cover hole size is ø5.5.
Note 5) If workpiece retaining screws are too long, they can touch the guide block and cause a malfunction. Use screws that are between the maximum and minimum screw-in depths in length.

Side Holder (In-line Motor Type/D Type)

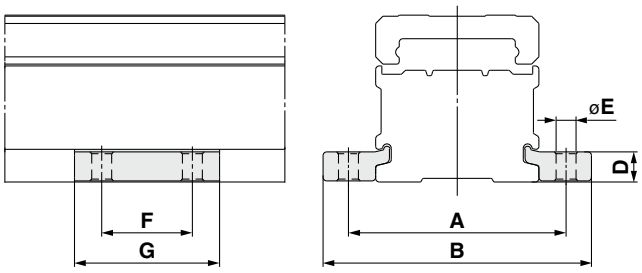

[mm]

Part no. Note)	A	B	D	E	F	G	Applicable model
LE-D-3-1	45	57.6	6.7	4.5	20	33	**LESH8D**
LE-D-3-2	60	74	8.3	5.5	25	40	**LESH16D**
LE-D-3-3	81	99	12	6.6	30	49	**LESH25D**

Note) Model numbers for 1 side holder.

Series LES/LESH
Electric Slide Tables/ Specific Product Precautions 1

Be sure to read this before handling. Refer to page 906 for Safety Instructions. For Electric Actuator Precautions, refer to pages 907 to 912, or "Handling Precautions for SMC Products" and the Operation Manual on SMC website, http://www.smcworld.com

Design

⚠Caution

1. Do not apply a load in excess of the specification limits.

Select a suitable actuator by work load and allowable moment. If the product is used outside of the specification limits, the eccentric load applied to the guide will be excessive and have adverse effects such as creating play on the guide, degrading accuracy and shortening the life of the product.

2. Do not use the product in applications where excessive external force or impact force is applied to it.

This can cause failure.

Handling

⚠Caution

1. INP output signal

1) Positioning operation
When the product comes within the set range by step data [In position], the INP output signal will turn on.
Initial value: Set to [0.50] or higher.

2) Pushing operation
When the effective force exceeds step data [Trigger LV], the INP output signal will turn on. Use the product within the specified range of [Pushing force] and [Trigger LV].
To ensure that the actuator pushes the workpiece with the set [Pushing force], it is recommended that the [Trigger LV] be set to the same value as the [Pushing force].

2. When the pushing operation is used, be sure to set to [Pushing operation]. Never hit at the stroke end except during return to origin.

When incorrect instructions are inputted, such as using the product outside of the specification limits or operation outside of actual stroke through changes in the controller/driver setting and/or origin position, the table may collide against the stroke end of the actuator. Check these points before use.
If the table collides against the stroke end of the actuator, the guide, belt or internal stopper can be broken. This may lead to abnormal operation.

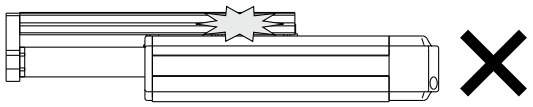

Handle the actuator with care when it is used in the vertical direction as the workpiece will fall freely from its own weight.

3. Use the product with the following moving force.

- Step motor (Servo/24 VDC): 100%
- Servo motor (24 VDC) : 250%

If the moving force is set below the above values, it may cause an alarm.

Handling

⚠Caution

4. The actual speed of this actuator is affected by the load.

Check the model selection section of the catalog.

5. Do not apply a load, impact or resistance in addition to the transferred load during return to origin.

Additional force will cause the displacement of the origin position since it is based on detected motor torque.

6. The table and guide block are made of special stainless steel, but can rust in an environment where droplets of water adhere to it.

7. Do not dent, scratch or cause other damage to the body, table and end plate mounting surfaces.

This may cause unevenness in the mounting surface, play in the guide or an increase in the sliding resistance.

8. Do not dent, scratch or cause other damage to the surface over which the rail and guide will move.

This may cause play or an increase in the sliding resistance.

9. Do not apply strong impact or an excessive moment while mounting a workpiece.

If an external force over the allowable moment is applied, it may cause play in the guide or an increase in the sliding resistance.

10. Keep the flatness of mounting surface 0.02 mm or less.

Unevenness of a workpiece or base mounted on the body of the product may cause play on the guide and increased sliding resistance. Do not deform the mounting surface by mounting with workpieces tucked in.

11. Do not drive the main body with the table fixed.

12. When mounting the product, for R/L type fixed cable, keep the following dimension or more for bends in the cable. For D type, keep a 40 mm or longer diameter for bends in the cable.

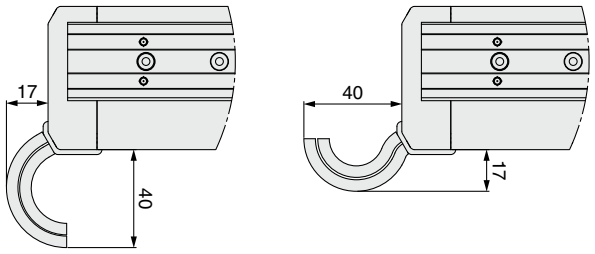

Electric Slide Tables/ Specific Product Precautions 2

Be sure to read this before handling. Refer to page 906 for Safety Instructions. For Electric Actuator Precautions, refer to pages 907 to 912, or "Handling Precautions for SMC Products" and the Operation Manual on SMC website, http://www.smcworld.com

Handling

⚠Caution

13. When mounting the product, use screws with adequate length and tighten them to the maximum torque or less.

Tightening the screws with a higher torque than recommended may cause a malfunction, whilst the tightening with a lower torque can cause the displacement of the mounting position or in extreme conditions the actuator could become detached from its mounting position.

Body fixed/ Side mounting (Body tapped)

Model	Screw size	Max. tightening torque [N·m]	L (Max. screw-in depth [mm])
LES□8R/L	M4 x 0.7	1.5	8
LES□8D	M5 x 0.8	3	10
LES16R/L			
LES16D	M6 x 1	5.2	12
LESH16□			
LES25R/L			
LES25D	M8 x 1.25	10	16
LESH25□			

Body fixed/ Side mounting (Through-hole)

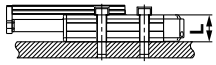

Model	Screw size	Max. tightening torque [N·m]	L [mm]
LES8R/L	M3 x 0.5	0.63	23.5
LESH8R/L			25.5
LES□8D	M4 x 0.7	1.5	18.2
LES16R/L			33.5
LES16D	M5 x 0.8	3	25.2
LESH16R/L			35.5
LESH16D			25.5
LES25R/L			49
LES25D	M6 x 1	5.2	39.8
LESH25R/L			50.5
LESH25D			39.5

Workpiece fixed/ Front mounting

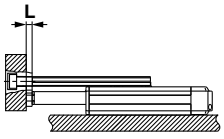

Model	Screw size	Max. tightening torque [N·m]	L [mm]
LES8R/L	M3 x 0.5	0.63	6
LESH8R/L			5.5
LES□8D	M4 x 0.7	1.5	8
LES16R/L			
LES16D	M5 x 0.8	3	
LESH16□			
LES25R/L	M6 x 1	5.2	12
LESH25R/L			10
LES□25D			14

To prevent the workpiece retaining screws from penetrating the end plate, use screws that are 0.5 mm or shorter than the maximum screw-in depth. If long screws are used, they can touch the end plate and cause a malfunction.

Workpiece fixed/ Top mounting

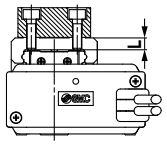

Model	Screw size	Max. tightening torque [N·m]	L (Min. to Max. screw-in depth [mm])
LES8□	M3 x 0.5	0.63	2.1 to 4.1
LESH8□			5 (Max.)
LES16□	M4 x 0.7	1.5	2.7 to 5.7
LESH16□	M5 x 0.8	3	6.5 (Max.)
LES25□			3.3 to 7.3
LESH25□	M6 x 1	5.2	8 (Max.)

To prevent the workpiece retaining screws from touching the guide block, use screws that are the maximum screw-in depth or less. If long screws are used, they can touch the guide block and cause a malfunction.

Body fixed/Side mounting (Side holder)

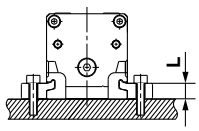

Model	Screw size	Max. tightening torque [N·m]	L [mm]
LESH8D	M4 x 0.7	1.5	6.7
LESH16D	M5 x 0.8	3	8.3
LESH25D	M6 x 1	5.2	12

When using the side holders to install the actuator, be sure to use the positioning pin. It can be displaced when vibration or excessive external force is applied.

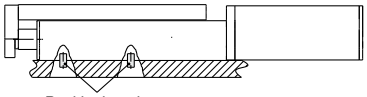

Positioning pin

14. In pushing operation, set the product to a position of at least 0.5 mm away from a workpiece. (This position is referred to as a pushing start position.)

If the product is set to the same position as a workpiece, the following alarms may be generated and operation may become unstable.

a. "Posn failed" alarm is generated.

The product cannot reach a pushing start position due to variation in the width of workpieces.

b. "Pushing ALM" alarm is generated.

The product is pushed back from a pushing start position after starting to push.

15. When external force is applied to the table, it is necessary to reduce the work load for the sizing.

When a cable duct or flexible moving tube is attached to the actuator, the sliding resistance of the table increases and may lead to operational failure of the product.

16. When using the side holders to install the actuator, use within the following dimension range.

Otherwise, installation balance will deteriorate and cause loosening.

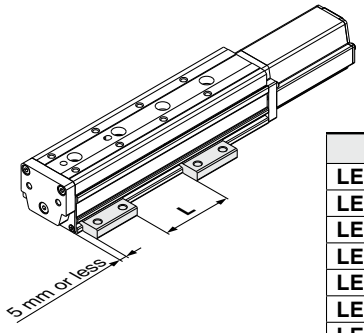

Model	L [mm]
LES□8D□-30	5 to 10
LES□8D□-50	20 to 30
LES□8D□-75	50 to 60
LES□16D□-30	5 to 10
LES□16D□-50	20 to 30
LES□16D□-75	60 to 75
LES□16D□-100	85 to 100
LES□25D□-30	5 to 15
LES□25D□-50	25 to 35
LES□25D□-75	60 to 75
LES□25D□-100	70 to 100
LES□25D□-125	155 to 170
LES□25D□-150	160 to 180

17. For the LES□□D, do not grasp or peel off a masking tape on the bottom of the body.

The masking tape may peel off and foreign matter may get inside the actuator.

18. For the LES□□D, a gap will form between the motor flange and table when the table moves (marked with the arrow below). Be careful not to put hands or fingers in a gap.

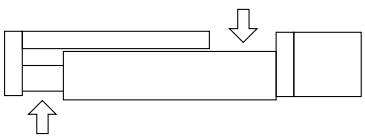

Electric Slide Tables/ Specific Product Precautions 3

Be sure to read this before handling. Refer to page 906 for Safety Instructions. For Electric Actuator Precautions, refer to pages 907 to 912, or "Handling Precautions for SMC Products" and the Operation Manual on SMC website, http://www.smcworld.com

Handling

⚠Caution

19. When mounting the body with through-holes in the following mounting orientations, make sure to use two side holders as shown in the figures.

Otherwise, installation balance will deteriorate and cause loosening.

Bottom mounting

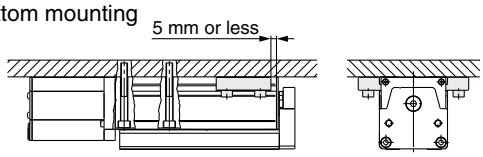

Wall mounting

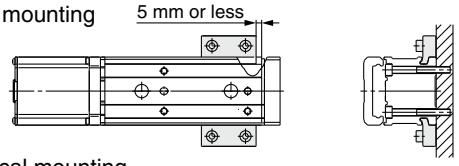

Vertical mounting

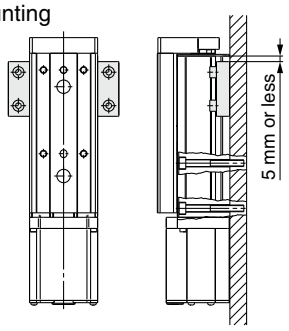

20. Install the body as shown below with the ○.

Since the product support becomes unstable, it may cause a malfunction, noise or an increase in the deflection.

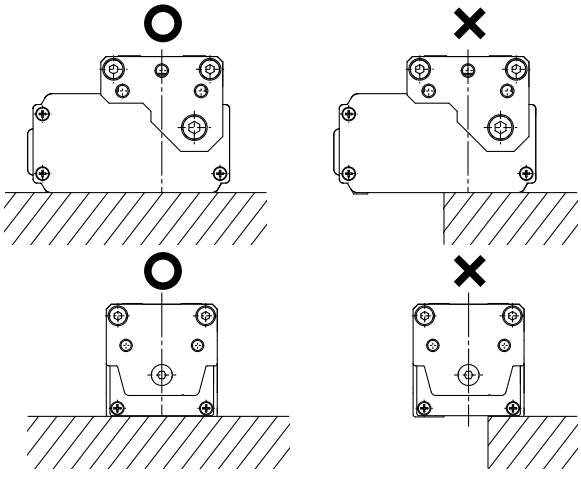

21. Even with the same product number, the table of some products can be moved by hand and the table of some products cannot be moved by hand. However, there is no abnormality with these products. (Without lock)

This difference is caused because there is a little variation with the positive efficiency (when the table is moved by the motor) and there is a large variation with the reverse-efficiency (when the table is moved manually) due to the product characteristics. There is hardly any difference among products when they are operated by the motor.

Handling

⚠Caution

22. For LES□□$^{R}_{L}$, remove the cap and operate the manual override screw with a hexagon wrench.

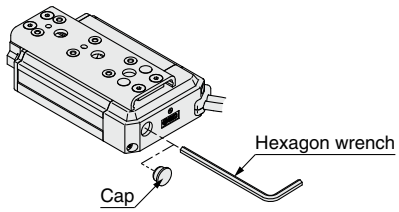

Maintenance

⚠Warning

1. Ensure that the power supply is stopped before starting maintenance work or replacement of the product.

2. For lubrication, wear protective glasses.

3. Perform maintenance according to the following requirements.

- **Maintenance frequency**

Perform maintenance according to the table below.

Frequency	Appearance check	Belt check
Inspection before daily operation	○	—
Inspection every 6 months*	—	○
Inspection every 250 km*	—	○
Inspection every 5 million cycles*	—	○

* Select whichever comes first.

- **Items for visual appearance check**

1. Loose set screws, Abnormal dirt
2. Check of flaw and cable joint
3. Vibration, Noise

- **Items for belt check (R/L type only)**

Stop operation immediately and replace the belt when belt appear to be below.

a. Tooth shape canvas is worn out.
Canvas fiber becomes fuzzy. Rubber is removed and the fiber becomes whitish. Lines of fibers become unclear.

b. Peeling off or wearing of the side of the belt
Belt corner becomes round and frayed thread sticks out.

c. Belt partially cut
Belt is partially cut. Foreign matter caught in teeth other than cut part causes flaw.

d. Vertical line of belt teeth
Flaw which is made when the belt runs on the flange.

e. Rubber back of the belt is softened and sticky.

f . Crack on the back of the belt