Rod Type/Guide Rod Type
LEY Series

∗ For details, refer to page 1343 and onward.

RoHS

Size: **16, 25, 32, 40, 63, 100**

Battery-less Absolute (Step Motor 24 VDC)

Incremental (Step Motor 24 VDC) **Incremental** (Servo Motor 24 VDC)

Rod Type *LEY Series* — Size: 16, 25, 32, 40 ▶p. 421, 427

Long stroke:

Max. 500 mm (LEY32, 40)

Dust-tight/Water-jet-proof (IP65 Equivalent/IP67 Equivalent): **-X7** ▶p. 897

∗ Size: 25, 32 ∗ The X7 is not UL compliant.

Dust-tight/Water-jet-proof (IP65 Equivalent): **-X5** ▶p. 913

∗ Size: 25, 32 ∗ The X5 is not UL compliant.

Mounting variations

- Direct mounting: 3 directions, Bracket mounting: 3 types
- Either positioning or pushing control can be selected.
  It is possible to hold the actuator with the rod pushing a workpiece, etc.

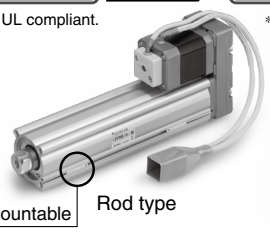

Auto switch mountable

Rod type

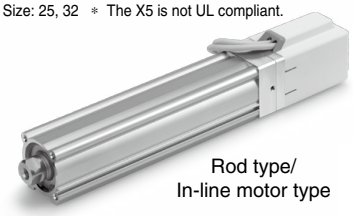

Rod type/
In-line motor type

Guide Rod Type *LEYG Series* — Size: 16, 25, 32, 40 ▶p. 507, 513

Lateral end load: 5 times more∗1

∗1 Compared with the rod type, size 25, and 100 mm stroke

Compatible with sliding bearings and ball bushing bearings
Compatible with moment loads and stoppers (sliding bearings)

- Either positioning or pushing control can be selected.
  It is possible to hold the actuator with the rod pushing a workpiece, etc.

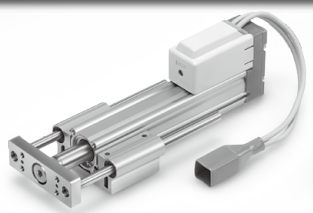

Guide rod type

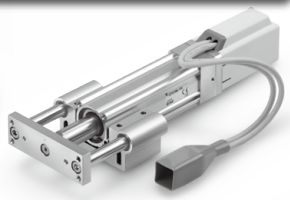

Guide rod type/
In-line motor type

AC Servo Motor

Rod Type *LEY Series* — Size: 25, 32, 63, 100

Dust-tight/Water-jet-proof (IP65 Equivalent): **-X5** ▶p. 433, 441

∗ Size: 25, 32
∗ The X5 is not UL compliant.

- High-output motor (100/200/400/750 W)
- Improved high-speed transfer ability
- High acceleration/deceleration compatible (5000 mm/s²)
- Pulse input/Positioning/ CC-Link/SSCNETⅢ/H types
- With internal absolute encoder (For the LECSB-T/C-T/S-T/N□-T and LECY)

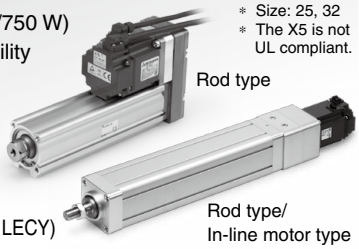

Rod type

Rod type/
In-line motor type

Size 100 has been added.

Guide Rod Type *LEYG Series* — Size: 25, 32

▶p. 521, 527

Guide rod type

Guide rod type/
In-line motor type

Incremental (Step Motor 24 VDC)
Incremental (Servo Motor 24 VDC)

∗ For details, refer to page 1343 and onward.

Controllers/Drivers ▶p. 994

- ▶**Step data input type**
  JXC51/61, LECA6 Series (64 positioning points)
- ▶**EtherCAT/EtherNet/IP™/ PROFINET/DeviceNet®/IO-Link/ CC-Link direct input type**
  JXCE□/91/P1/D1/L□/M1 Series
- ▶**Programless type**
  LECP1 Series (14 positioning points)
- ▶**Pulse input type**
  LECPA Series

AC Servo Motor Drivers

▶p. 1100

∗ For details, refer to page 1347 and onward.

∗ Only the LECSA and LECS□-T are compliant. The LECSN□-T is only compliant if the "Without network card" option is selected.

▶**For absolute encoders**

- Pulse input type/ Positioning type
  LECSB-T Series
- CC-Link direct input type
  LECSC-T Series
- Network card type
  LECSN□-T Series
- SSCNETⅢ/H type
  LECSS-T Series
- MECHATROLINK type
  LECY□ Series

▶**For incremental encoders**

- Pulse input type/ Positioning type
  LECSA Series

Battery-less Absolute (Step Motor 24 VDC)

Rod Type *LEY□E* Series/Size: 16, 25, 32, 40 p. 421

Restart from the last stop position is possible after recovery of the power supply.

Easy operation restart after recovery of the power supply

The position information is held by the encoder even when the power supply is turned off.
A return to origin operation is not necessary when the power supply is recovered.

Does not require the use of batteries. Reduced maintenance

Batteries are not used to store the position information. Therefore, there is no need to store spare batteries or replace dead batteries.

Incremental (Step Motor 24 VDC) **Incremental** (Servo Motor 24 VDC)

Rod Type *LEY* Series/Size: 16, 25, 32, 40 p. 427

Control of intermediate positioning and pushing is possible. High precision with ball screws

(Positioning repeatability: ±0.02 mm)

Selectable motor mounting position

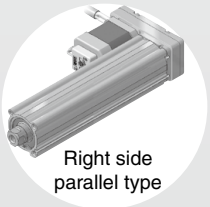

Right side parallel type

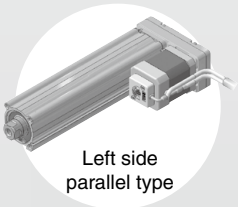

Left side parallel type

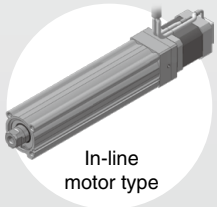

In-line motor type

Non-magnetizing lock mechanism (Option)

Prevents workpieces from dropping (Holding)

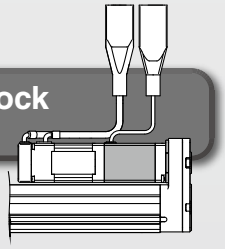

Motor cover available (Option)

∗ The cover has an opening.

Select from 2 types of actuator cables.

- Standard cable
- Robotic cable (Flexible cable)

Manual override screw

For manual piston rod operation
Adjustment operation is possible when the power is OFF.

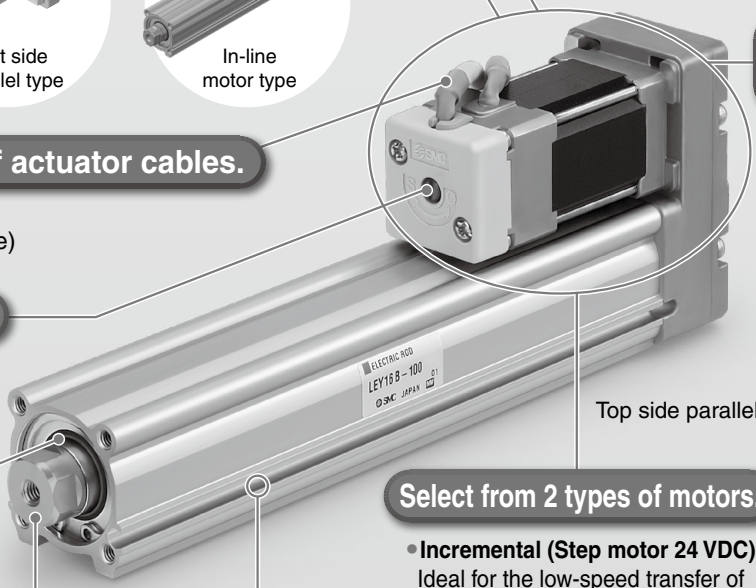

Top side parallel motor type

Scraper

Prevents foreign matter from entering the device

Equipped with scrapers as standard

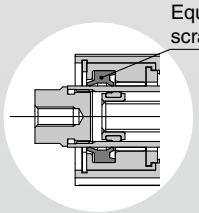

p. 499, 500

Select from 2 types of motors.

- **Incremental (Step motor 24 VDC)**
  Ideal for the low-speed transfer of heavy loads and pushing operations
- **Incremental (Servo motor 24 VDC)**
  Stable at high speeds
  Silent operation

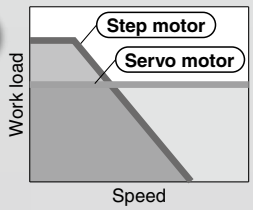

Mounting groove for auto switches

For checking the limit and the intermediate signal
Applicable to the D-M9□, D-M9□E, and D-M9□W (2-color indicator)

∗ The auto switches should be ordered separately. Refer to pages 503 to 505 for details.

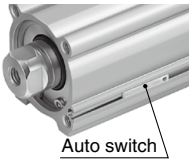

Auto switch

2-color indicator solid state auto switch

Accurate setting of the mounting position can be performed without mistakes.

A green light lights up when within the optimum operating range.

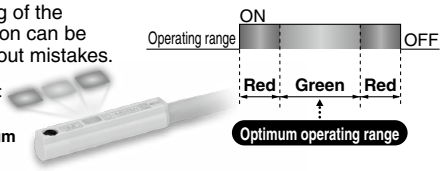

Rod end brackets

Single knuckle joint

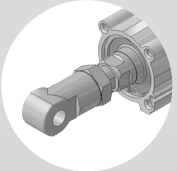

Double knuckle joint

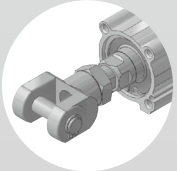

Simple joint

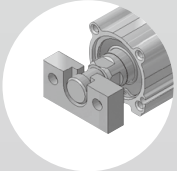

AC Servo Motor

Rod Type *LEY Series*/Size: 25, 32, 63, 100 p. 433, 441

- High-output motor (100/200/400/750 W)
- Improved high-speed transfer ability
- High acceleration/deceleration compatible (5000 mm/s²)
- Pulse input/CC-Link direct input/SSCNET Ⅲ types/ Network card type
- With internal absolute encoder
  ∗ An incremental encoder can also be selected.
- Positioning repeatability: ±0.01 mm (High-precision type)

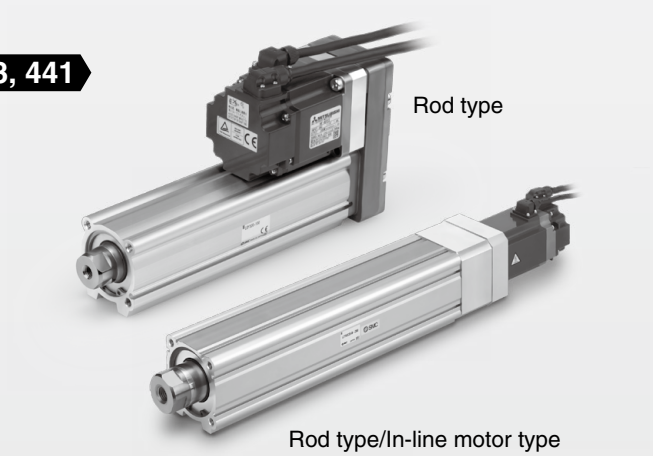

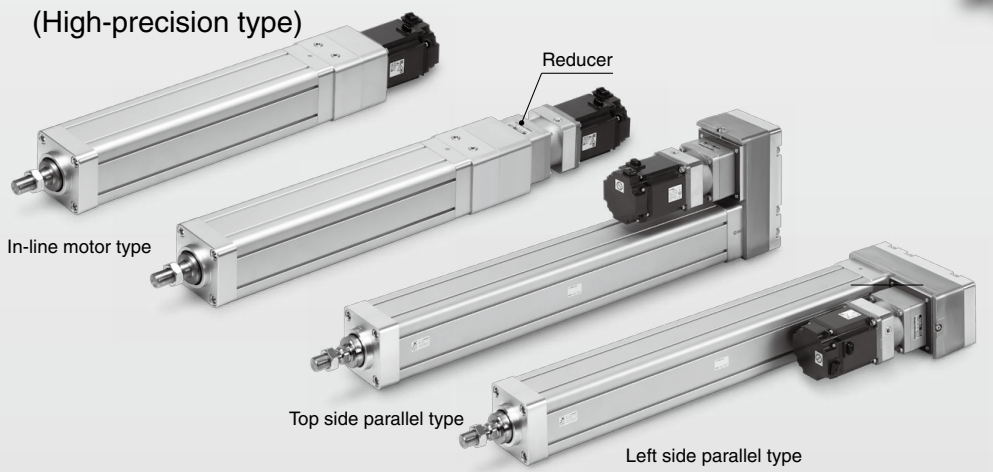

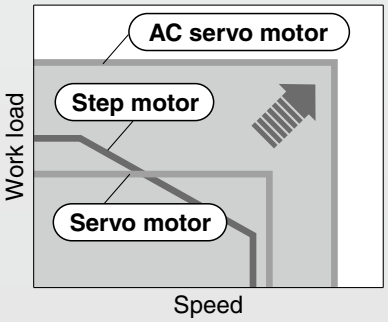

Large bore size: 63, 100

- High-output motor: **400 w** (Size 63)/**750 w** (Size 100)
- Max. work load [kg]

Mounting position \ Size	63		100
	Parallel	In-line	In-line
Horizontal	200	80	1200
Vertical	115	72	200

- Max. force [N]

Motor mounting position \ Size	63	100
Parallel	3343	12000
In-line	1910	12000

- Max. speed∗1

Size	Speed [mm/s]
63	1000∗1
100	500∗1

∗1 500 mm stroke or less

- The flange mounting pitch is based on ISO 15552. (Size 100)
- The ISO cylinder (C96 ø80) and flange mounting bracket are now standardized. (Size 100)

F Flange

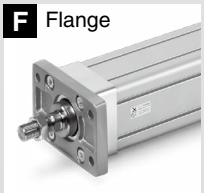

L Foot bracket

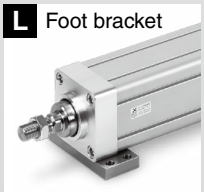

D Double clevis

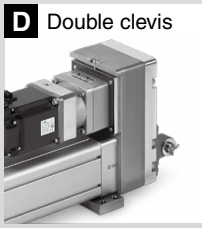

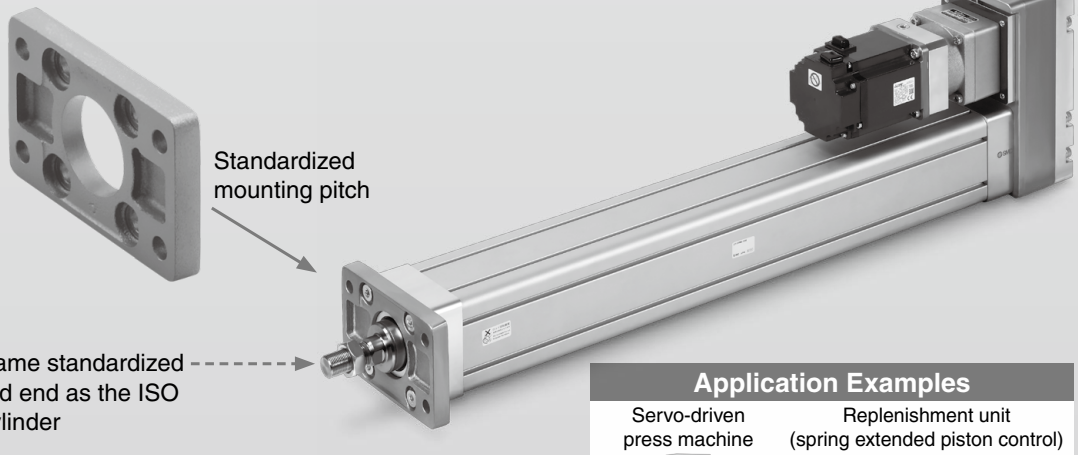

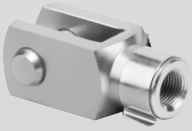
Rod clevis

Ball joint

Floating joint

Application Examples

Servo-driven press machine

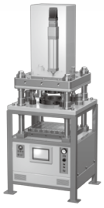

Replenishment unit (spring extended piston control)

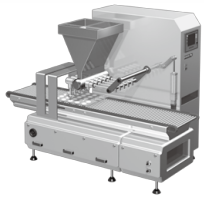

Battery-less Absolute (Step Motor 24 VDC)

Guide Rod Type *LEYG□E Series*/Size: 16, 25, 32, 40 p. 507

Restart from the last stop position is possible after recovery of the power supply.

Easy operation restart after recovery of the power supply

The position information is held by the encoder even when the power supply is turned off. A return to origin operation is not necessary when the power supply is recovered.

Does not require the use of batteries. Reduced maintenance

Batteries are not used to store the position information. Therefore, there is no need to store spare batteries or replace dead batteries.

Incremental (Step Motor 24 VDC) **Incremental** (Servo Motor 24 VDC)

Guide Rod Type *LEYG Series*/Size: 16, 25, 32, 40 p. 513

Compact, integrated guide rods Lateral load resistance and high non-rotating accuracy

Compatible with sliding bearings and ball bushing bearings

- **Sliding bearings**
  For lateral load applications such as when using a stopper where impact is applied
- **Ball bushing bearings**
  Smooth operation suitable for pushers and lifters

Lateral end load: 5 times or more*1

*1 Compared with the rod type, size 25, and 100 mm stroke

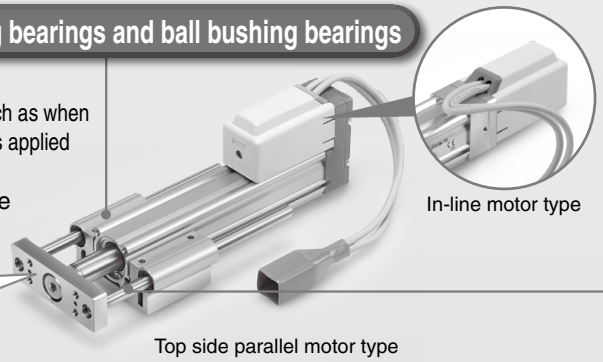

In-line motor type

Top side parallel motor type

Non-rotating accuracy improved by using two guide rods

Bore size [mm]	16	25	32	40
Sliding bearings	±0.06°		±0.05°	
Ball bushing bearings	±0.05°	±0.04°		

When the cylinder is retracted (initial value), the non-rotating accuracy without a load and without deflection of the guide rods will be below the values shown in the table above.

AC Servo Motor

Guide Rod Type

LEYG Series/Size: 25, 32 p. 521, 527

When using auto switches for the guide rod type LEYG series, refer to page 576.

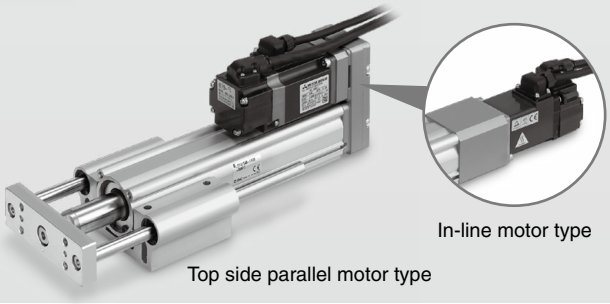

In-line motor type

Top side parallel motor type

Mounting Variations

Direct Mounting

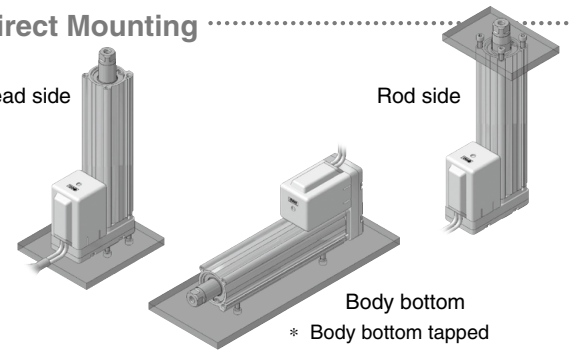

Bracket Mounting

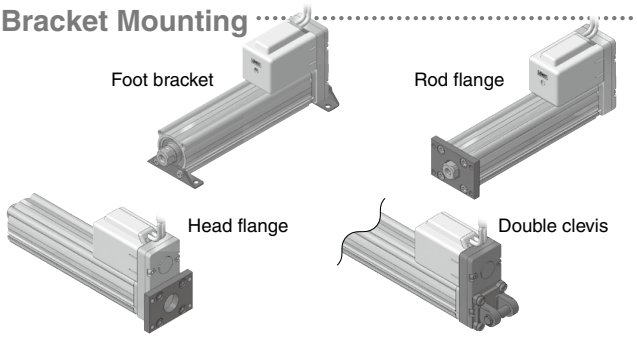

Application Examples

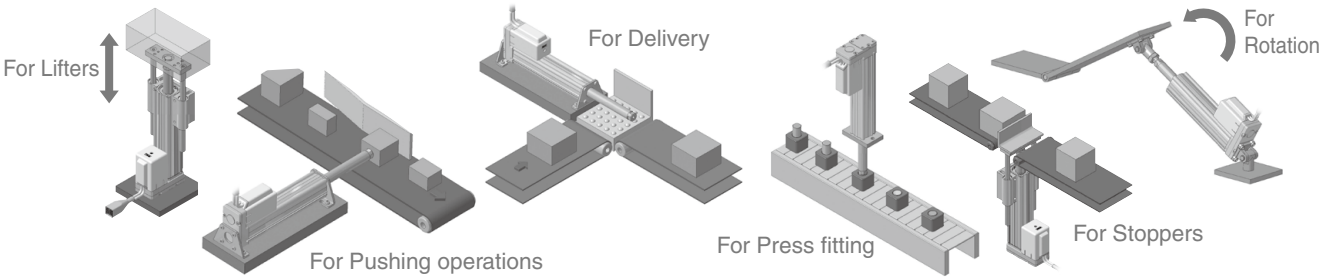

Dust-tight/Water-jet-proof (IP65 Equivalent/IP67 Equivalent) *LEY-X7 Series*

∗ Testing of IP65 equivalent has also been carried out.

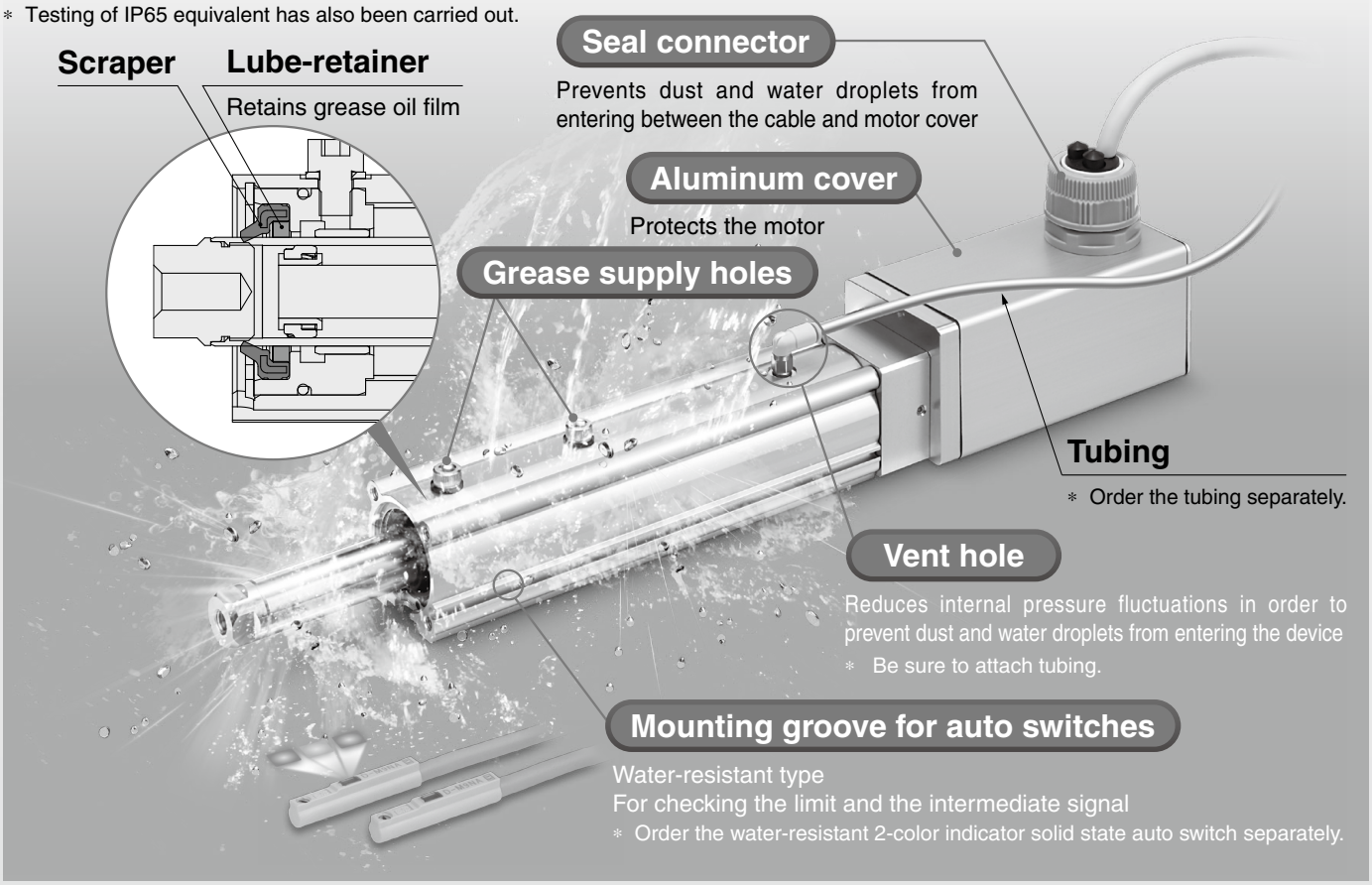

●Max. stroke: 500 mm∗1

∗1 For sizes 32 and 40

Application Examples

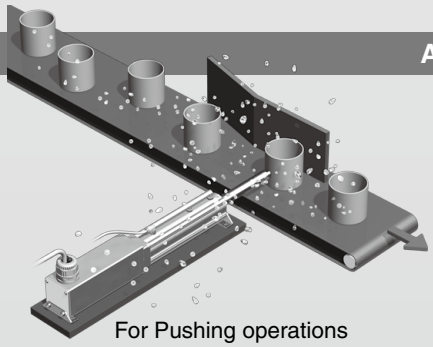
For Pushing operations

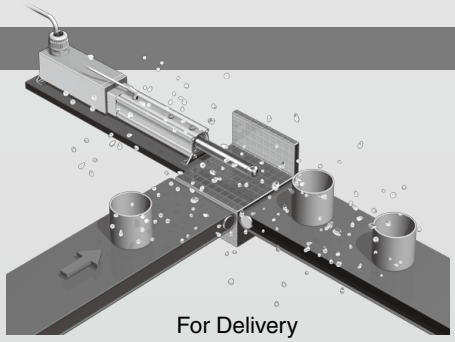
For Delivery

Variations

Series	Enclosure	Size			Motor mounting position
		Battery-less Absolute (Step Motor 24 VDC)	Incremental (Step Motor 24 VDC) Incremental (Servo Motor 24 VDC)	AC Servo Motor	
LEY-X8 p. 883 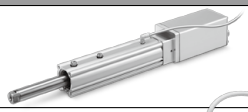	IP65 equivalent/ IP67 equivalent	25 32 40	—	—	In-line
LEY-X7 p. 897 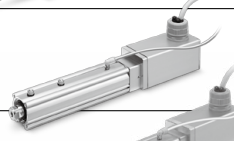	IP65 equivalent/ IP67 equivalent	—	25 32 40	—	In-line
LEY-X5 p. 913 **LEY63-□P** p. 473, 489 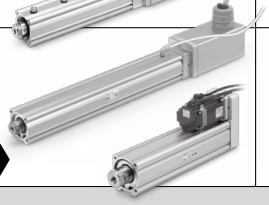	IP65 equivalent	—	25 32	25 32 63	Top side parallel, Right side parallel∗1, Left side parallel∗1, In-line

∗1 Size 63 only

CONTENTS

Rod Type *LEY Series*

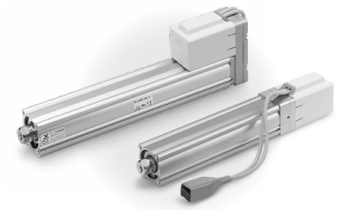

Battery-less Absolute (Step Motor 24 VDC)

◎Rod Type *LEY Series*

Model Selection ..... p. 421
How to Order ..... p. 447
Specifications ..... p. 449
Construction ..... p. 451
Dimensions ..... p. 453

Incremental (Step Motor 24 VDC) Incremental (Servo Motor 24 VDC)

◎Rod Type *LEY Series*

Model Selection ..... p. 427
How to Order ..... p. 459
Specifications ..... p. 463
Construction ..... p. 465
Dimensions ..... p. 467

AC Servo Motor

LECS□ Series

◎Rod Type *LEY Series* Size 25, 32, 63 Dust-tight/Water-jet-proof (IP65 Equivalent) ＊ Option

Model Selection ..... p. 433
How to Order ..... p. 473
Specifications ..... p. 475
Construction ..... p. 478
Dimensions ..... p. 479

◎Rod Type *LEY Series* Size 100

Model Selection ..... p. 433
How to Order ..... p. 485
Specifications ..... p. 486
Construction ..... p. 487
Dimensions ..... p. 488

LECY□ Series

◎Rod Type *LEY Series* Dust-tight/Water-jet-proof (IP65 Equivalent) ＊ Option

Model Selection ..... p. 441
How to Order ..... p. 489
Specifications ..... p. 491
Construction ..... p. 493
Dimensions ..... p. 494

Accessory Mounting Brackets ..... p. 499
Auto Switch ..... p. 502

Guide Rod Type *LEYG Series*

Battery-less Absolute (Step Motor 24 VDC)

◎Guide Rod Type *LEYG Series*

Model Selection ..... p. 507
How to Order ..... p. 533
Specifications ..... p. 535
Construction ..... p. 537
Dimensions ..... p. 539
Support Block ..... p. 543

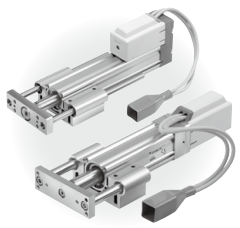

Incremental (Step Motor 24 VDC) Incremental (Servo Motor 24 VDC)

◎Guide Rod Type *LEYG Series*

Model Selection ..... p. 513
How to Order ..... p. 545
Specifications ..... p. 549
Construction ..... p. 551
Dimensions ..... p. 553
Support Block ..... p. 557

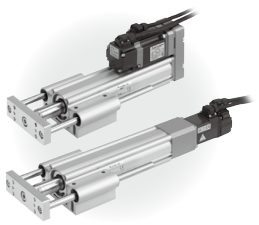

AC Servo Motor

LECS□ Series

◎Guide Rod Type *LEYG Series*

Model Selection ..... p. 521
How to Order ..... p. 559
Specifications ..... p. 561
Construction ..... p. 562
Dimensions ..... p. 563
Support Block ..... p. 565

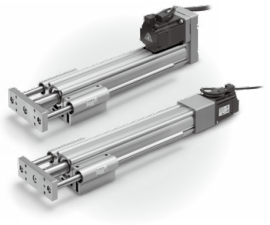

LECY□ Series

◎Guide Rod Type *LEYG Series*

Model Selection ..... p. 527
How to Order ..... p. 567
Specifications ..... p. 569
Construction ..... p. 570
Dimensions ..... p. 571
Support Block ..... p. 573

Environment

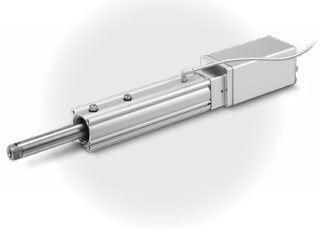

Battery-less Absolute (Step Motor 24 VDC)

◎Rod Type *LEY-X8* (Made to Order) Dust-tight/Water-jet-proof (IP65 Equivalent/IP67 Equivalent)

Model Selection ..... p. 883
How to Order ..... p. 887
Specifications ..... p. 889
Construction ..... p. 891
Dimensions ..... p. 892
Option: Actuator Cable ..... p. 893
Auto Switch Mounting ..... p. 894

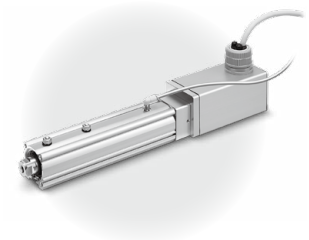

Incremental (Step Motor 24 VDC) Incremental (Servo Motor 24 VDC)

◎Rod Type *LEY-X7* (Made to Order) Dust-tight/Water-jet-proof (IP65 Equivalent/IP67 Equivalent)

Model Selection ..... p. 897
How to Order ..... p. 903
Specifications ..... p. 906
Construction ..... p. 908
Dimensions ..... p. 909
Auto Switch Mounting ..... p. 910

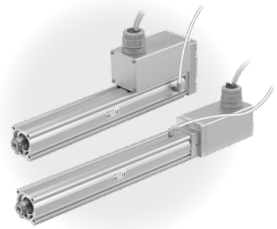

◎Rod Type *LEY-X5* (Made to Order) Dust-tight/Water-jet-proof (IP65 Equivalent)

Model Selection ..... p. 913
How to Order ..... p. 917
Specifications ..... p. 920
Construction ..... p. 922
Dimensions ..... p. 923

AC Servo Motor

LECS□ Series

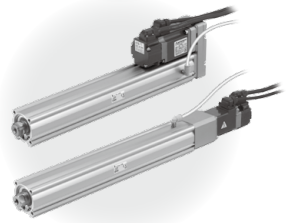

◎Rod Type *LEY-X5* (Made to Order) Dust-tight/Water-jet-proof (IP65 Equivalent)

Model Selection ..... p. 433
How to Order ..... p. 925
Specifications ..... p. 927
Construction ..... p. 928
Dimensions ..... p. 929

LECY□ Series

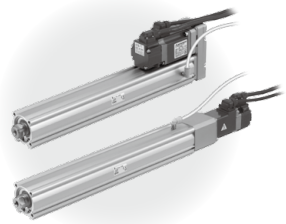

◎Rod Type *LEY-X5* (Made to Order) Dust-tight/Water-jet-proof (IP65 Equivalent)

Model Selection ..... p. 441
How to Order ..... p. 931
Specifications ..... p. 933
Dimensions ..... p. 934
Auto Switch Mounting ..... p. 936

Incremental (Step Motor 24 VDC) Incremental (Servo Motor 24 VDC) AC Servo Motor

◎Rod Type *25A-LEY* Secondary Battery Compatible

Model Selection ..... p. 427, 433, 441
How to Order ..... p. 983, 987, 989
Applicable Auto Switch ..... p. 991

Precautions ..... p. 992

◎Incremental (Step Motor 24 VDC)/ Incremental (Servo Motor 24 VDC) Controllers/Drivers

Step Data Input Type/**JXC51/61 Series** ..... p. 1017
Step Data Input Type/**LECA6 Series** ..... p. 1031
Gateway Unit/**LEC-G Series** ..... p. 1038
Programless Controller/**LECP1 Series** ..... p. 1042
Pulse Input Type/**LECPA Series** ..... p. 1057
EtherCAT/EtherNet/IP™/PROFINET/DeviceNet®/IO-Link/
CC-Link Direct Input Type/**JXCE□/91/P1/D1/L□/M1 Series** ..... p. 1063

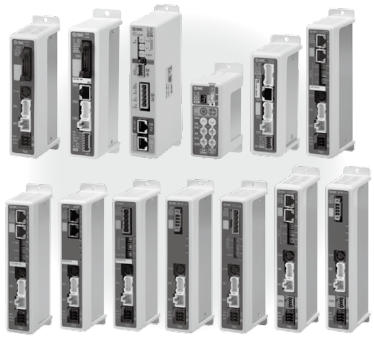

◎3-Axis Step Motor Controller

EtherNet/IP™ Type/**JXC92 Series** ..... p. 1079

◎4-Axis Step Motor (Servo/24 VDC) Controller

Parallel I/O Type/**JXC73/83 Series** ..... p. 1081
EtherNet/IP™ Type/**JXC93 Series** ..... p. 1081

Actuator Cable ..... p. 1091
Communication Cable for Controller Setting/**LEC-W2A-□** ..... p. 1094
Teaching Box/**LEC-T1** ..... p. 1095

◎AC Servo Motor Drivers

LECSA Series ..... p. 1110
LECSB-T/LECSC-T/LECSN□-T/LECSS-T Series ..... p. 1110
LECYM/LECYU Series ..... p. 1131

CE/UKCA/UL-compliance List ..... p. 1343

Rod Type

LEY Series

Battery-less Absolute (Step Motor 24 VDC)

p. 447

Top/Right/Left side parallel motor type

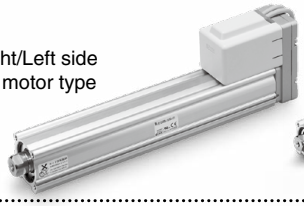

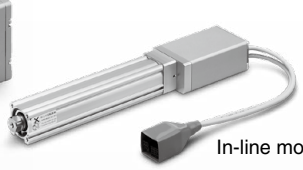

In-line motor type

Incremental (Step Motor 24 VDC)
Incremental (Servo Motor 24 VDC)

p. 459

Top/Right/Left side parallel motor type

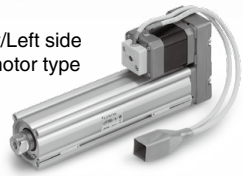

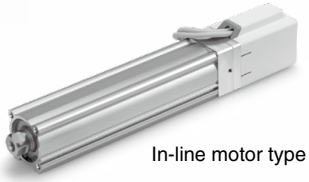

In-line motor type

AC Servo Motor

p. 473, 489

Top/Right/Left side parallel motor type

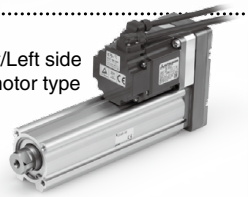

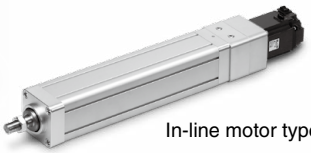

In-line motor type

Environment

Battery-less Absolute (Step Motor 24 VDC)

Dust-tight/Water-jet-proof (IP65 Equivalent/IP67 Equivalent)

LEY-X8 (Made to Order)

p. 887

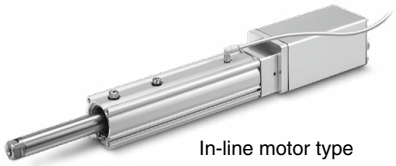

In-line motor type

Incremental (Step Motor 24 VDC) **Incremental** (Servo Motor 24 VDC)

Dust-tight/Water-jet-proof (IP65 Equivalent/IP67 Equivalent)

LEY-X7 (Made to Order)

p. 903, 917

In-line motor type

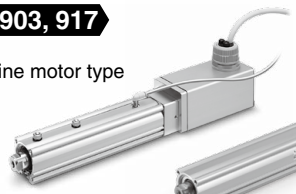

Dust-tight/Water-jet-proof (IP65 Equivalent)

LEY-X5 (Made to Order)

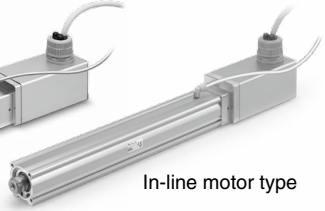

In-line motor type

Secondary Battery Compatible

25A-LEY

p. 983

Top/Right/Left side parallel motor type

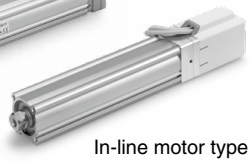

In-line motor type

AC Servo Motor

Dust-tight/Water-jet-proof (IP65 Equivalent)

LEY25/32-X5 (Made to Order)

p. 925, 931

Top/Right/Left side parallel motor type

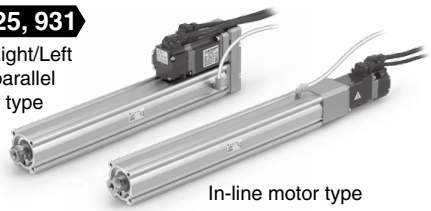

In-line motor type

LEY63□□□-□P (Option)

p. 473, 489

Secondary Battery Compatible

25A-LEY

p. 987, 989

Top/Right/Left side parallel motor type

In-line motor type

Controllers/Drivers p. 994

AC Servo Motor Drivers p. 1100

Model Selection

LEY□E Series ▶p. 447

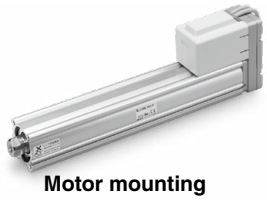
Motor mounting position: Parallel

Motor mounting position: In-line

Selection Procedure

Positioning Control Selection Procedure

Step 1 Check the work load–speed. (Vertical transfer) → **Step 2** Check the cycle time.

Selection Example

Operating conditions

- Workpiece mass: 4 [kg]
- Speed: 100 [mm/s]
- Acceleration/Deceleration: 3000 [mm/s²]
- Stroke: 200 [mm]
- Workpiece mounting condition: Vertical upward downward transfer

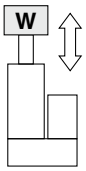

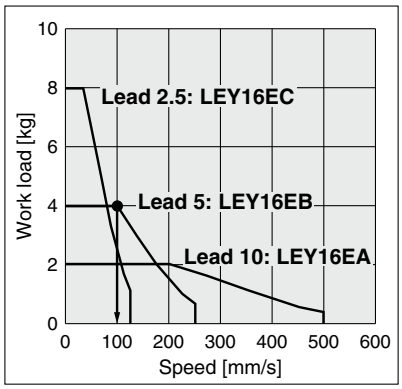

<Speed–Vertical work load graph> (LEY16/Battery-less absolute)

Step 1 **Check the work load–speed. <Speed–Vertical work load graph>**

Select a model based on the workpiece mass and speed while referencing the speed–vertical work load graph.

Selection example) The **LEY16EB** can be temporarily selected as a possible candidate based on the graph shown on the right side.

* It is necessary to mount a guide outside the actuator when used for horizontal transfer. When selecting the target model, refer to the horizontal work load in the specifications on page 449 and the precautions.

Step 2 **Check the cycle time.**

Calculate **the cycle time** using the following calculation method.

Cycle time:

T can be found from the following equation.

$$T = T1 + T2 + T3 + T4 \text{ [s]}$$

- T1: Acceleration time and T3: Deceleration time can be found by the following equation.

$$T1 = V/a1 \text{ [s]} \qquad T3 = V/a2 \text{ [s]}$$

- T2: Constant speed time can be found from the following equation.

$$T2 = \frac{L - 0.5 \cdot V \cdot (T1 + T3)}{V} \text{ [s]}$$

- T4: Settling time varies depending on the conditions such as motor types, load and in position of the step data. Therefore, calculate the settling time while referencing the following value.

$$T4 = 0.2 \text{ [s]}$$

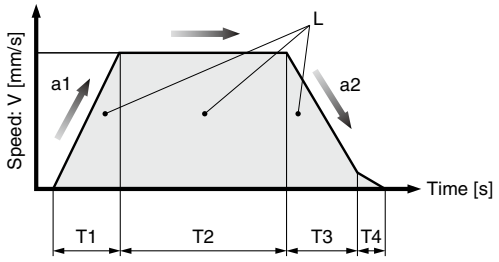

L : Stroke [mm] ··· (Operating condition)
V : Speed [mm/s] ··· (Operating condition)
a1: Acceleration [mm/s²] ··· (Operating condition)
a2: Deceleration [mm/s²] ··· (Operating condition)

T1: Acceleration time [s] ··· Time until reaching the set speed
T2: Constant speed time [s] ··· Time while the actuator is operating at a constant speed
T3: Deceleration time [s] ··· Time from the beginning of the constant speed operation to stop
T4: Settling time [s] ··· Time until positioning is completed

Calculation example)
T1 to T4 can be calculated as follows.

$$T1 = V/a1 = 100/3000 = 0.033 \text{ [s]},\ T3 = V/a2 = 100/3000 = 0.033 \text{ [s]}$$

$$T2 = \frac{L - 0.5 \cdot V \cdot (T1 + T3)}{V} = \frac{200 - 0.5 \cdot 100 \cdot (0.033 + 0.033)}{100} = 1.97 \text{ [s]}$$

$$T4 = 0.2 \text{ [s]}$$

The cycle time can be found as follows.

$T = T1 + T2 + T3 + T4 = 0.033 + 1.967 + 0.033 + 0.2 =$ **2.233 [s]**

Based on the above calculation result, the LEY16EB-200 should be selected.

Selection Procedure

Pushing Control Selection Procedure

Step 1 Check the duty ratio. → **Step 2** Check the pushing force. → **Step 3** Check the lateral load on the rod end.

∗ The duty ratio is a ratio of the operation time in one cycle.

Selection Example

Operating conditions

- Mounting condition: Horizontal (pushing)
- Attachment weight: 0.2 [kg]
- Pushing force: 68 [N]
- Duty ratio: 18 [%]
- Speed: 100 [mm/s]
- Stroke: 200 [mm]

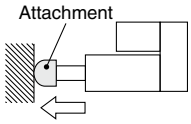

Step 1 **Check the duty ratio.**
<Conversion table of pushing force–duty ratio>

Select the [Pushing force] from the duty ratio while referencing the conversion table of pushing force–duty ratio.

Selection example)
Based on the table below,
- Duty ratio: 18 [%]

The pushing force set value will be 60 [%].

<Conversion table of pushing force–duty ratio>
(LEY16/Battery-less absolute)

Pushing force set value [%]	Duty ratio [%]	Continuous pushing time [min]
40 or less	100	No restriction
50	30	45 or less
60	18	15 or less
65	15	10 or less

∗ [Pushing force set value] is one of the step data input to the controller.
∗ [Continuous pushing time] is the time that the actuator can continuously keep pushing.

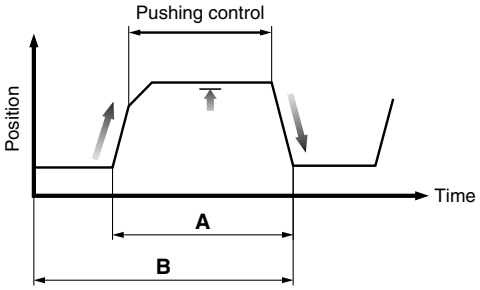

Duty ratio = A/B x 100 [%]

Step 2 **Check the pushing force.**
<Force conversion graph>

Select a model based on the pushing force set value and force while referencing the force conversion graph.

Selection example)
Based on the graph shown on the right side,
- Pushing force set value: 60 [%]
- Pushing force: 68 [N]

The **LEY16EB** can be temporarily selected as a possible candidate.

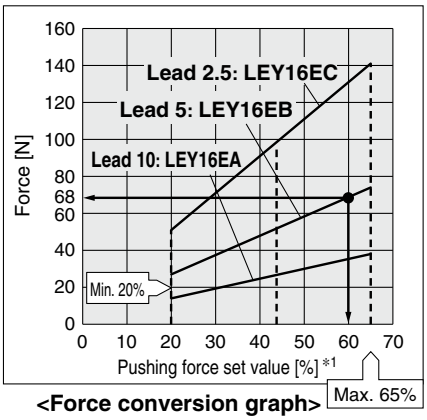

<Force conversion graph>
(LEY16/Battery-less absolute)
∗1 Set values for the controller

Step 3 **Check the lateral load on the rod end.**
<Graph of allowable lateral load on the rod end>

Confirm the allowable lateral load on the rod end of the actuator: LEY16□, which has been selected temporarily while referencing the graph of allowable lateral load on the rod end.

Selection example)
Based on the graph shown on the right side,
- Attachment weight: 0.2 [kg] ≈ 2 [N]
- Product stroke: 200 [mm]

The lateral load on the rod end is in the allowable range.

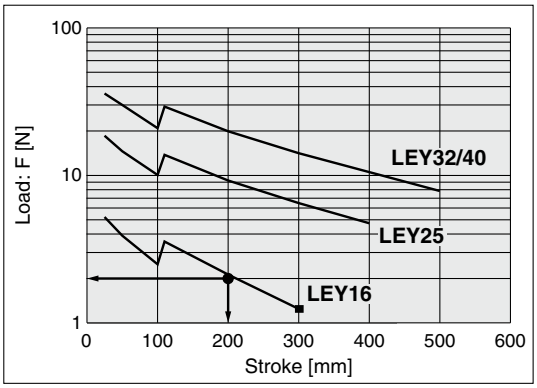

<Graph of allowable lateral load on the rod end>

Based on the above calculation result, the LEY16EB-200 should be selected.

Speed–Work Load Graph (Guide)
For Battery-less Absolute (Step Motor 24 VDC)

Horizontal

LEY16□E ▨ for acceleration/deceleration: 2000 mm/s²

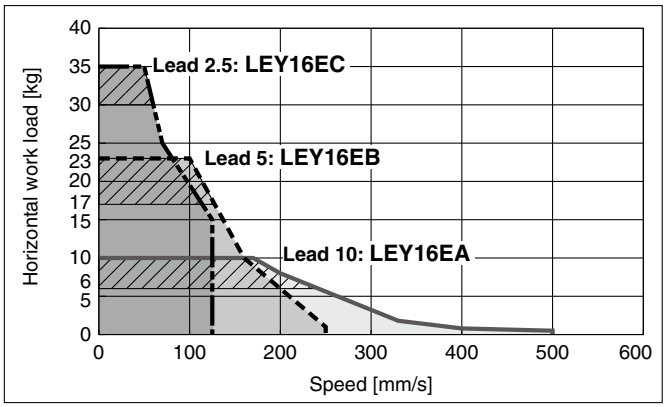

LEY25□E ▨ for acceleration/deceleration: 2000 mm/s²

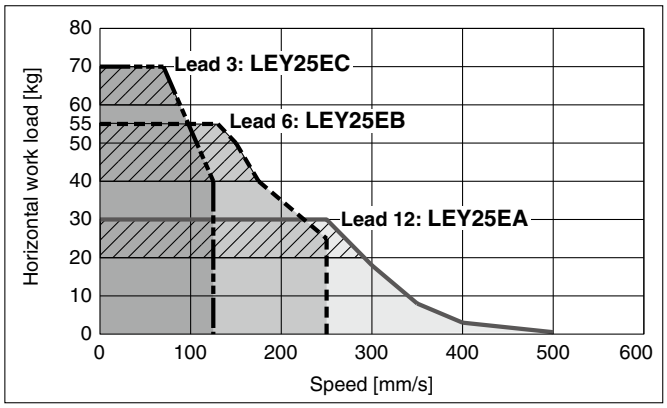

LEY32□E ▨ for acceleration/deceleration: 2000 mm/s²

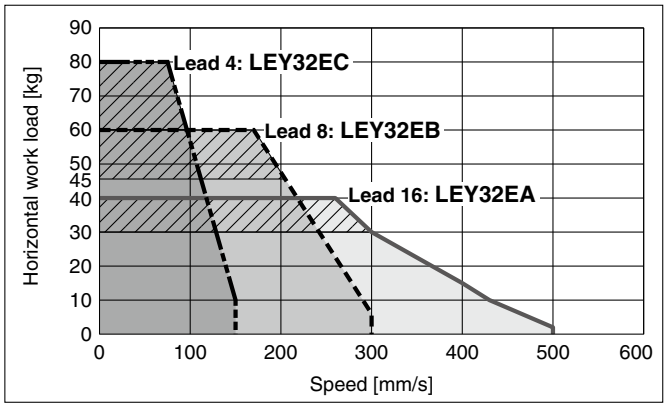

LEY40□E ▨ for acceleration/deceleration: 2000 mm/s²

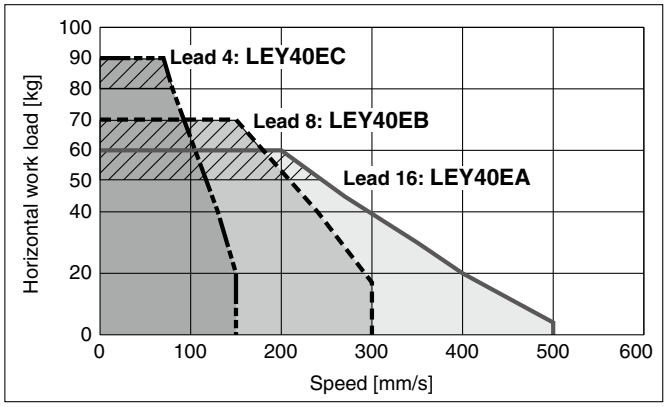

Vertical

LEY16□E

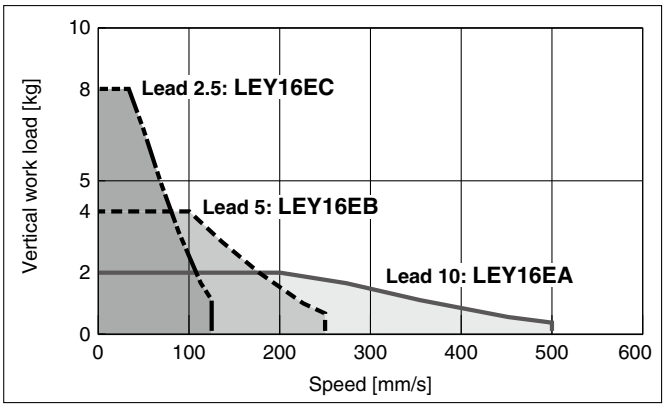

LEY25□E

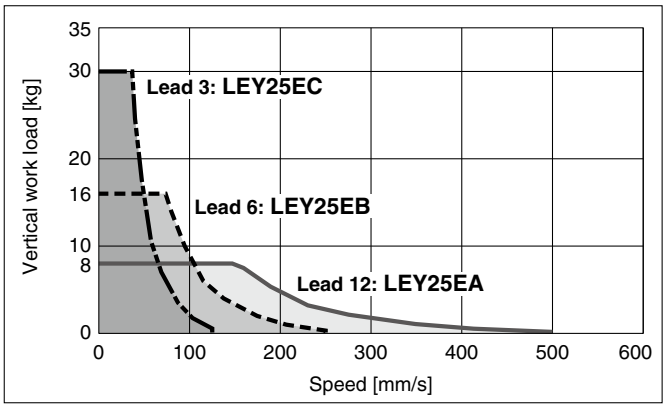

LEY32□E

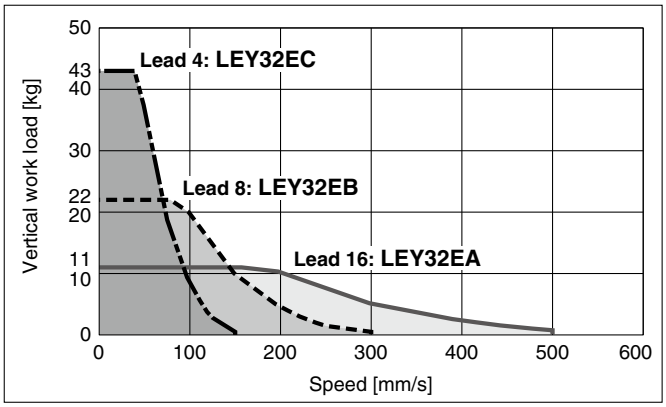

LEY40□E

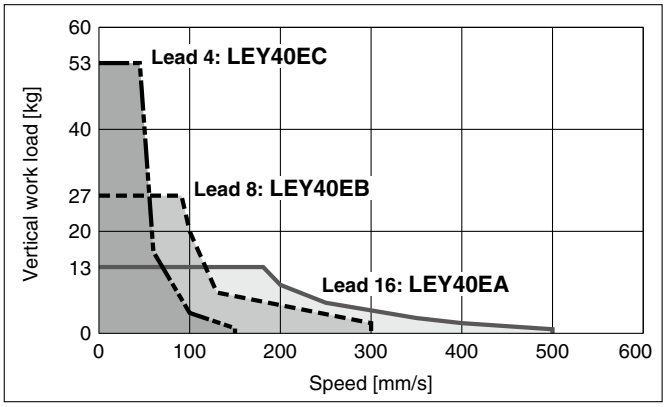

Force Conversion Graph (Guide)

Battery-less Absolute (Step Motor 24 VDC)

LEY16□E

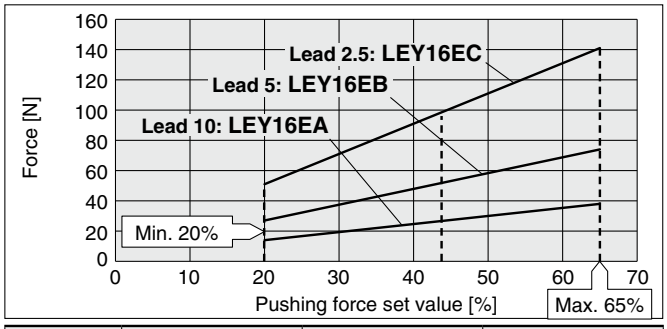

Ambient temperature	Pushing force set value [%]	Duty ratio [%]	Continuous pushing time [min]
30°C or less	65 or less	100	No restriction
40°C	40 or less	100	No restriction
	50	30	45 or less
	60	18	15 or less
	65	15	10 or less

LEY25□E

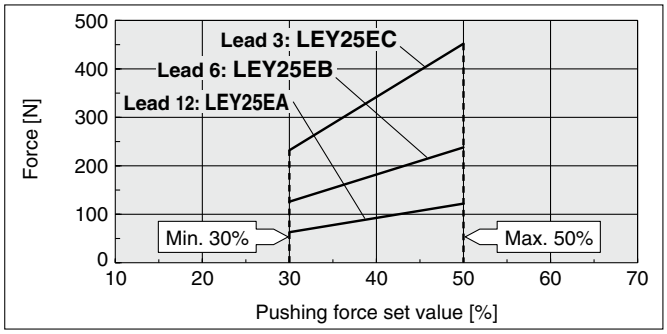

Ambient temperature	Pushing force set value [%]	Duty ratio [%]	Continuous pushing time [min]
40°C or less	50 or less	100	No restriction

LEY32□E

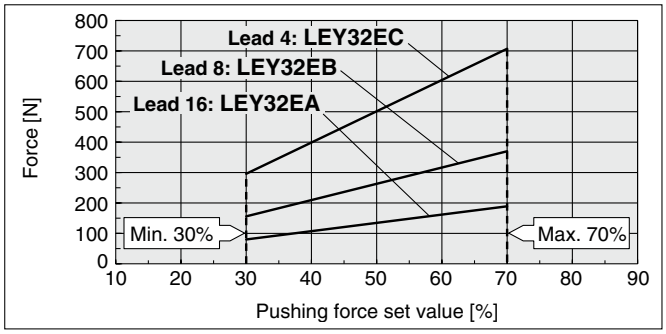

Ambient temperature	Pushing force set value [%]	Duty ratio [%]	Continuous pushing time [min]
40°C or less	70 or less	100	No restriction

LEY40□E

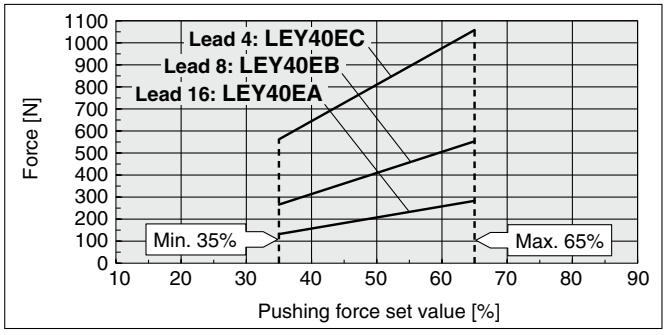

Ambient temperature	Pushing force set value [%]	Duty ratio [%]	Continuous pushing time [min]
40°C or less	65 or less	100	No restriction

<Limit Values for Pushing Force and Trigger Level in Relation to Pushing Speed>

Without Load

Model	Lead	Pushing speed [mm/s]	Pushing force (Setting input value)
LEY16□E	A/B/C	21 to 50	45 to 65%
LEY25□E	A/B/C	21 to 35	40 to 50%
LEY32□E	A	24 to 30	50 to 70%
	B/C	21 to 30	
LEY40□E	A	24 to 30	50 to 65%
	B/C	21 to 30	

There is a limit to the pushing force in relation to the pushing speed. If the product is operated outside of the range (low pushing force), the completion signal [INP] may be output before the pushing operation has been completed (during the moving operation).
If operating with the pushing speed below the min. speed, please check for operating problems before using the product.

<Set Values for Vertical Upward Transfer Pushing Operations>

For vertical loads (upward), set the pushing force to the max. value shown below and operate at the work load or less.

Model	LEY16□E			LEY25□E			LEY32□E			LEY40□E		
Lead	A	B	C	A	B	C	A	B	C	A	B	C
Work load [kg]	1	1.5	3	2.5	5	10	4.5	9	18	7	14	28
Pushing force	65%			50%			70%			65%		

Graph of Allowable Lateral Load on the Rod End (Guide)

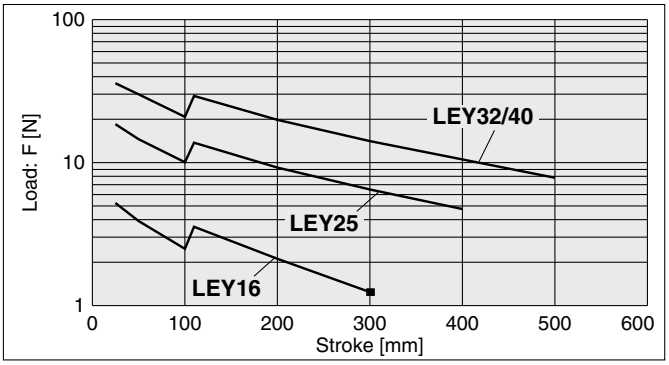

∗ The changes in the graph waveforms are due to the difference in components of different product strokes.

[Stroke] = [Product stroke] + [Distance from the rod end to the center of gravity of the workpiece]

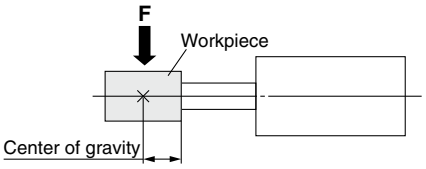

Rod Displacement: δ [mm]

Size \ Stroke	30	50	100	150	200	250	300	350	400	450	500
16	±0.4	±0.5	±0.9	±0.8	±1.1	±1.3	±1.5	—	—	—	—
25	±0.3	±0.4	±0.7	±0.7	±0.9	±1.1	±1.3	±1.5	±1.7	—	—
32, 40	±0.3	±0.4	±0.7	±0.6	±0.8	±1.0	±1.1	±1.3	±1.5	±1.7	±1.8

∗ The values without a load are shown.

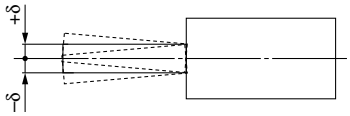

Non-rotating Accuracy of Rod

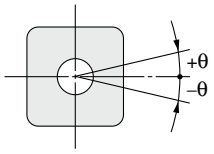

Size	Non-rotating accuracy θ
16	±1.1°
25	±0.8°
32	±0.7°
40	

∗ Avoid using the electric actuator in such a way that rotational torque would be applied to the piston rod.
Failure to do so may result in the deformation of the non-rotating guide, abnormal auto switch responses, play in the internal guide, or an increase in the sliding resistance.

Model Selection

LEY Series ▶p. 459 LEY-X7 Series ▶p. 897
LEY-X5 Series ▶p. 913 25A-LEY Series ▶p. 983

Selection Procedure

Positioning Control Selection Procedure

Step 1 Check the work load–speed. (Vertical transfer) → **Step 2** Check the cycle time.

Selection Example

Operating conditions

- Workpiece mass: 4 [kg]
- Speed: 100 [mm/s]
- Acceleration/Deceleration: 3000 [mm/s²]
- Stroke: 200 [mm]
- Workpiece mounting condition: Vertical upward downward transfer

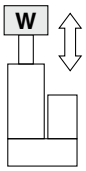

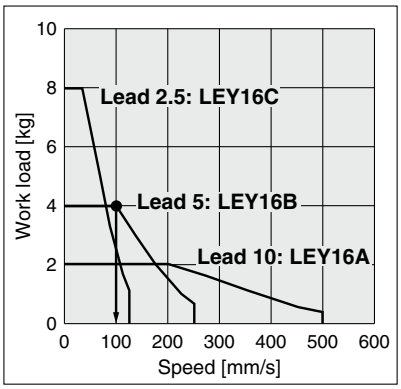

<Speed–Vertical work load graph> (LEY16/Step motor)

Step 1 **Check the work load–speed. <Speed–Vertical work load graph>**

Select a model based on the workpiece mass and speed while referencing the speed–vertical work load graph.

Selection example) The **LEY16B** can be temporarily selected as a possible candidate based on the graph shown on the right side.

* It is necessary to mount a guide outside the actuator when used for horizontal transfer. When selecting the target model, refer to the horizontal work load in the specifications on pages 463 and 464 and the precautions.

Step 2 **Check the cycle time.**

Calculate **the cycle time** using the following calculation method.

Cycle time:

T can be found from the following equation.

$$T = T1 + T2 + T3 + T4 \text{ [s]}$$

- T1: Acceleration time and T3: Deceleration time can be found by the following equation.

$$T1 = V/a1 \text{ [s]} \qquad T3 = V/a2 \text{ [s]}$$

- T2: Constant speed time can be found from the following equation.

$$T2 = \frac{L - 0.5 \cdot V \cdot (T1 + T3)}{V} \text{ [s]}$$

- T4: Settling time varies depending on the conditions such as motor types, load and in position of the step data. Therefore, calculate the settling time while referencing the following value.

$$T4 = 0.2 \text{ [s]}$$

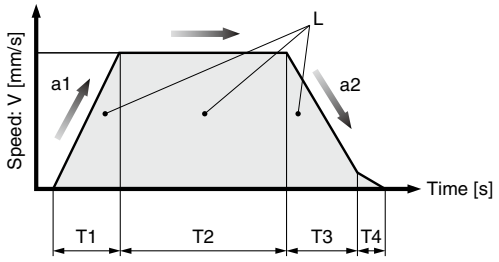

L : Stroke [mm] ··· (Operating condition)
V : Speed [mm/s] ··· (Operating condition)
a1: Acceleration [mm/s²] ··· (Operating condition)
a2: Deceleration [mm/s²] ··· (Operating condition)

T1: Acceleration time [s] ··· Time until reaching the set speed
T2: Constant speed time [s] ··· Time while the actuator is operating at a constant speed
T3: Deceleration time [s] ··· Time from the beginning of the constant speed operation to stop
T4: Settling time [s] ··· Time until positioning is completed

Calculation example)
T1 to T4 can be calculated as follows.

$$T1 = V/a1 = 100/3000 = 0.033 \text{ [s]},\ T3 = V/a2 = 100/3000 = 0.033 \text{ [s]}$$

$$T2 = \frac{L - 0.5 \cdot V \cdot (T1 + T3)}{V} = \frac{200 - 0.5 \cdot 100 \cdot (0.033 + 0.033)}{100} = 1.97 \text{ [s]}$$

$$T4 = 0.2 \text{ [s]}$$

The cycle time can be found as follows.

$T = T1 + T2 + T3 + T4 = 0.033 + 1.967 + 0.033 + 0.2 =$ **2.233 [s]**

Based on the above calculation result, the LEY16B-200 should be selected.

Selection Procedure

Pushing Control Selection Procedure

Step 1 Check the duty ratio. → **Step 2** Check the pushing force. → **Step 3** Check the lateral load on the rod end.

∗ The duty ratio is a ratio of the operation time in one cycle.

Selection Example

Operating conditions

- Mounting condition: Horizontal (pushing)
- Attachment weight: 0.2 [kg]
- Pushing force: 60 [N]
- Duty ratio: 20 [%]
- Speed: 100 [mm/s]
- Stroke: 200 [mm]

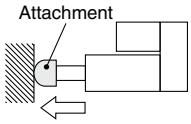

Step 1 **Check the duty ratio.**
<Conversion table of pushing force–duty ratio>

Select the [Pushing force] from the duty ratio while referencing the conversion table of pushing force–duty ratio.

Selection example)
Based on the table below,
- Duty ratio: 20 [%]

The pushing force set value will be 70 [%].

<Conversion table of pushing force–duty ratio>
(LEY16/Step motor)

Pushing force set value [%]	Duty ratio [%]	Continuous pushing time [min]
40 or less	100	No restriction
50	70	12 or less
70	20	1.3 or less
85	15	0.8 or less

∗ [Pushing force set value] is one of the step data input to the controller.
∗ [Continuous pushing time] is the time that the actuator can continuously keep pushing.

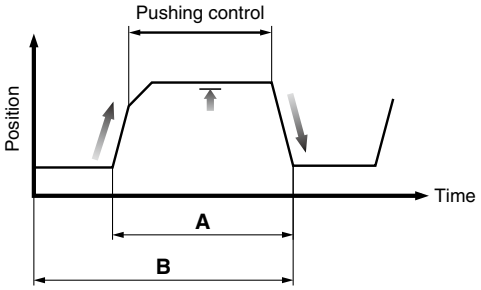

Duty ratio = A/B x 100 [%]

Step 2 **Check the pushing force.**
<Force conversion graph>

Select a model based on the pushing force set value and force while referencing the force conversion graph.

Selection example)
Based on the graph shown on the right side,
- Pushing force set value: 70 [%]
- Pushing force: 60 [N]

The **LEY16B** can be temporarily selected as a possible candidate.

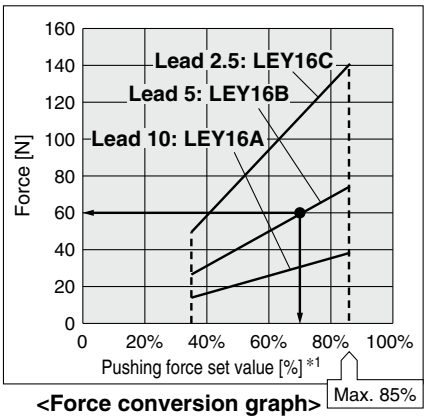

<Force conversion graph>
(LEY16/Step motor)
∗1 Set values for the controller

Step 3 **Check the lateral load on the rod end.**
<Graph of allowable lateral load on the rod end>

Confirm the allowable lateral load on the rod end of the actuator: LEY16□, which has been selected temporarily while referencing the graph of allowable lateral load on the rod end.

Selection example)
Based on the graph shown on the right side,
- Attachment weight: 0.2 [kg] ≈ 2 [N]
- Product stroke: 200 [mm]

The lateral load on the rod end is in the allowable range.

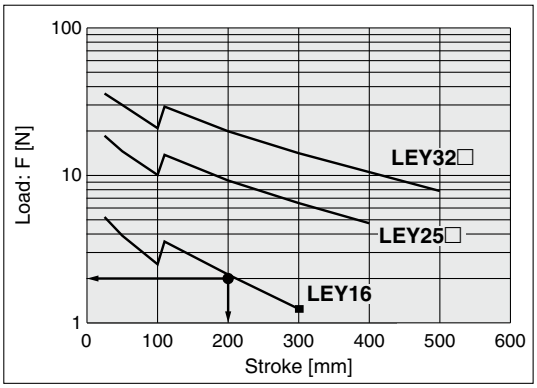

<Graph of allowable lateral load on the rod end>

Based on the above calculation result, the LEY16B-200 should be selected.

Refer to page 430 for the LECPA, JXC□$^{2}_{3}$ and page 431 for the LECA6.

Speed–Work Load Graph (Guide)
For Step Motor (Servo/24 VDC) JXC□1, LECP1

Horizontal

LEY16□

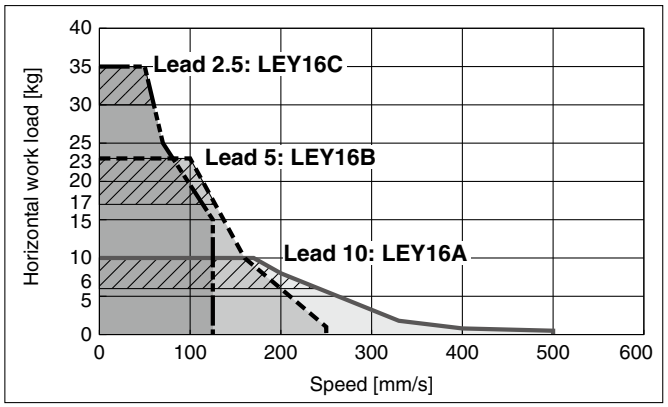

LEY25□

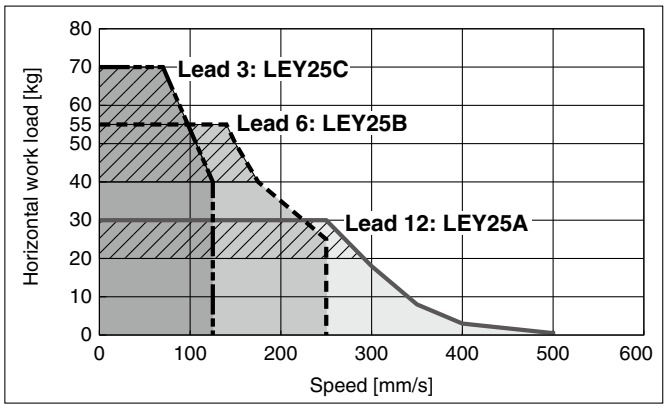

LEY32□

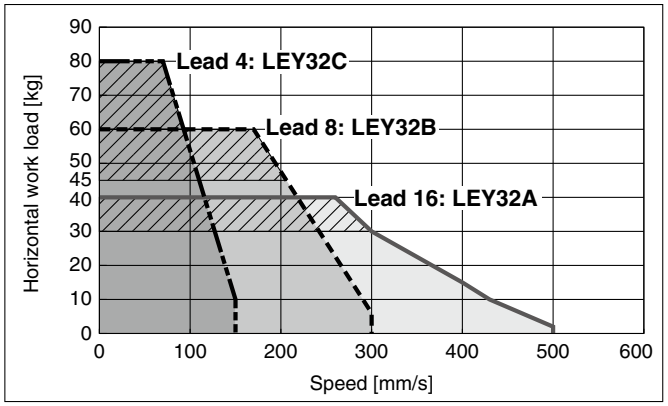

LEY40□

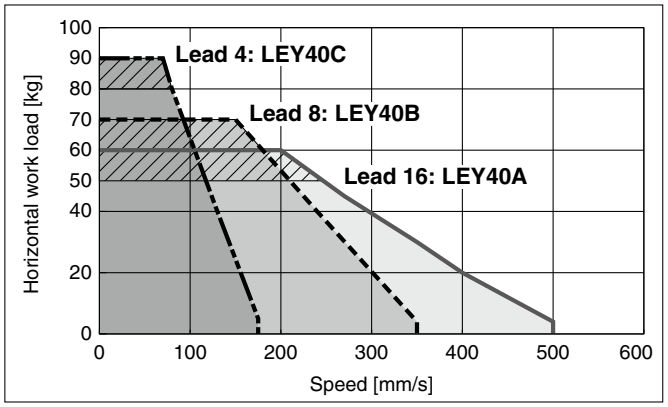

Vertical

LEY16□

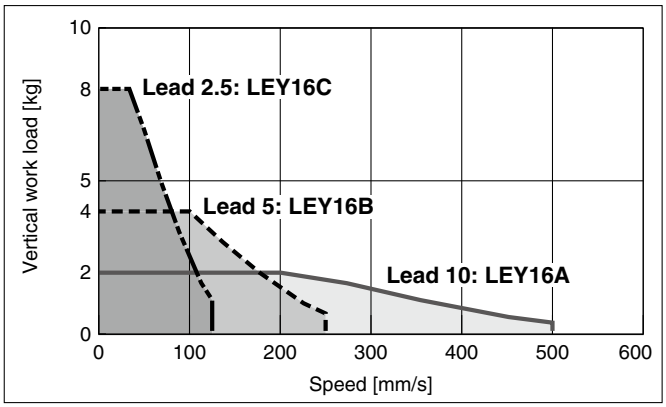

LEY25□

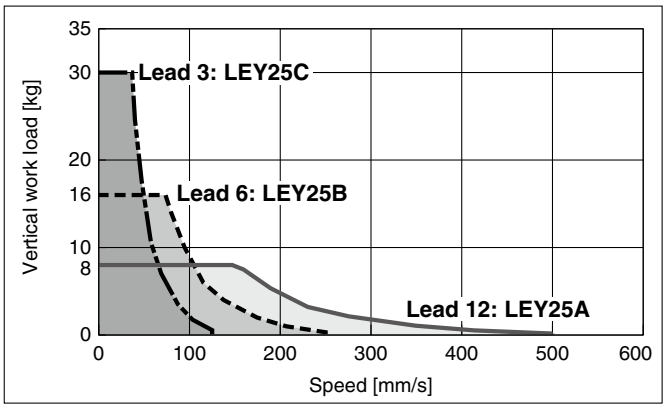

LEY32□

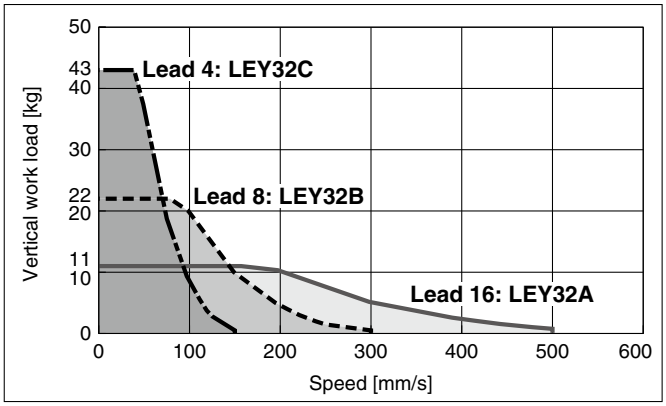

LEY40□

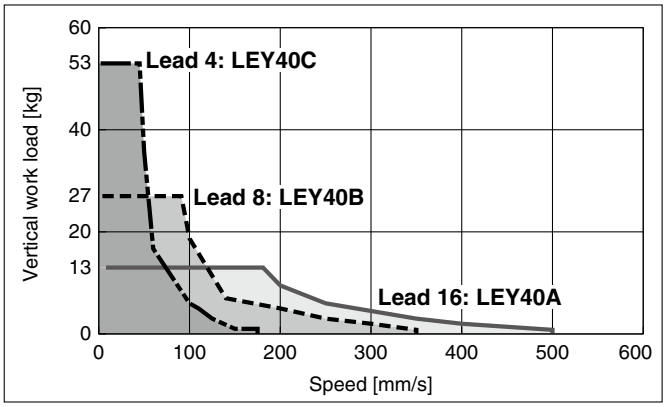

Refer to page 429 for the JXC□1, LECP1 and page 431 for the LECA6.

Speed–Work Load Graph (Guide)
For Step Motor (Servo/24 VDC) LECPA, JXC□$^{2}_{3}$

Horizontal

LEY16□

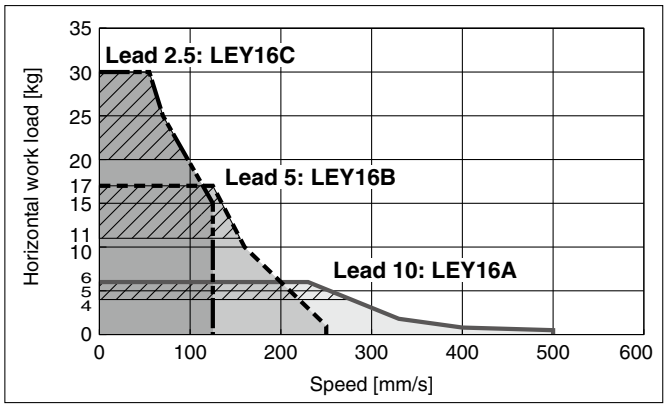

LEY25□

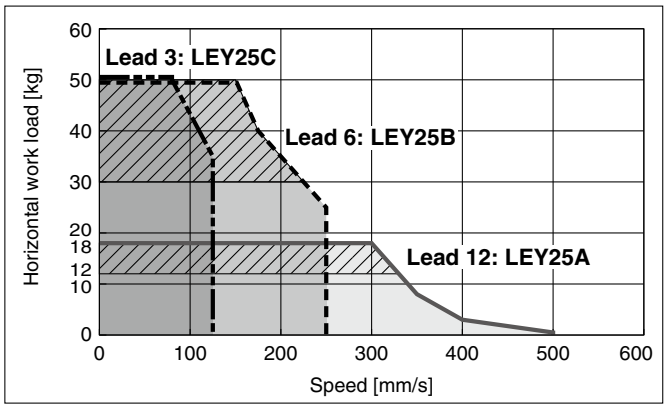

LEY32□

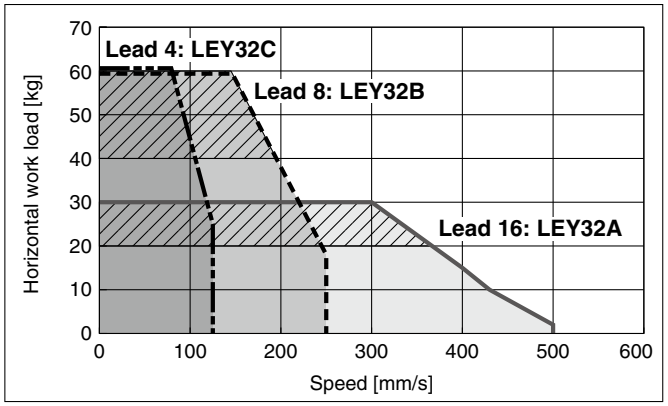

LEY40□

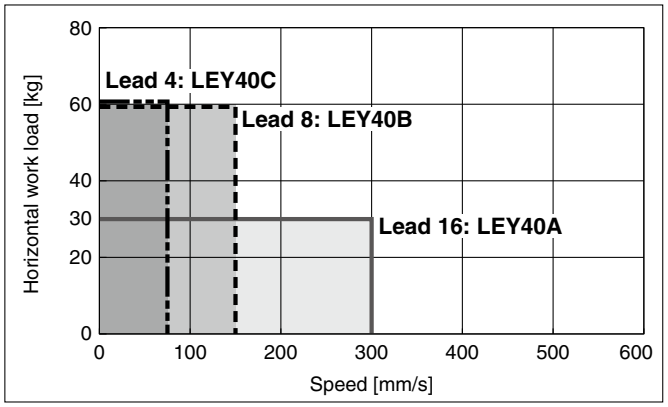

Vertical

LEY16□

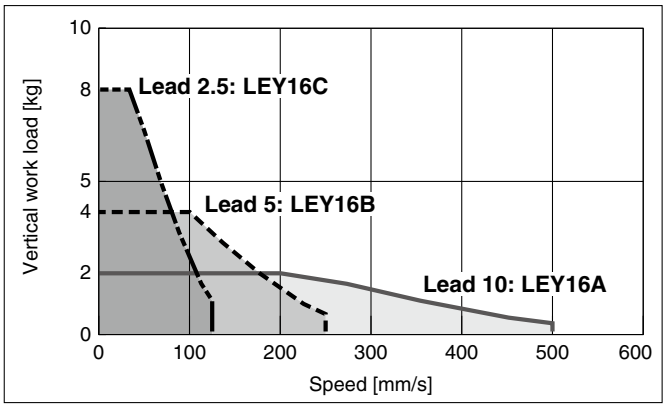

LEY25□

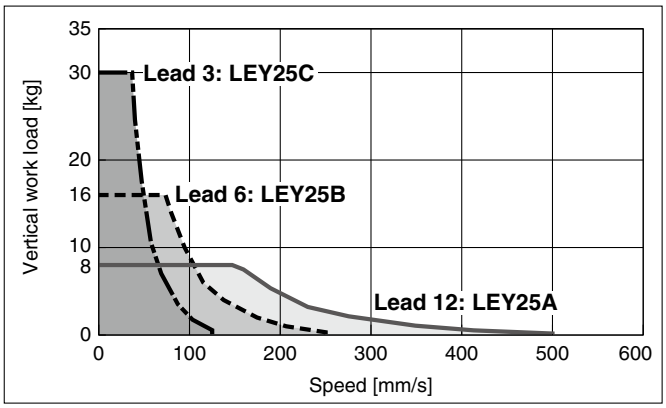

LEY32□

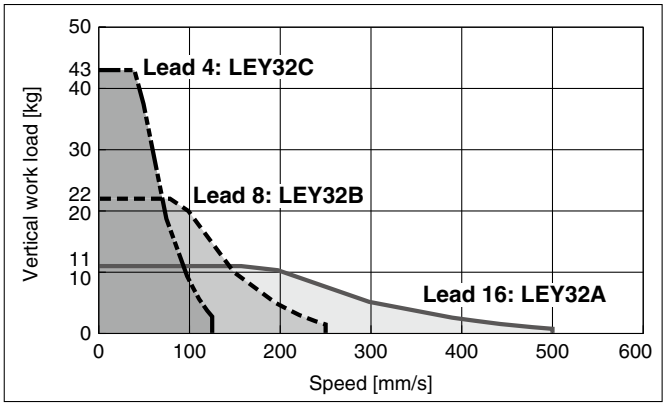

LEY40□

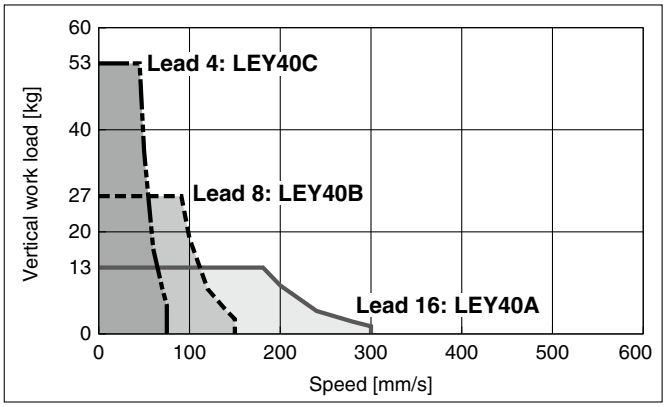

Refer to page 429 for the JXC□1, LECP1 and page 430 for the LECPA, JXC□$^{2}_{3}$.

Speed–Work Load Graph (Guide) For Servo Motor (24 VDC) LECA6

Horizontal

LEY16□A

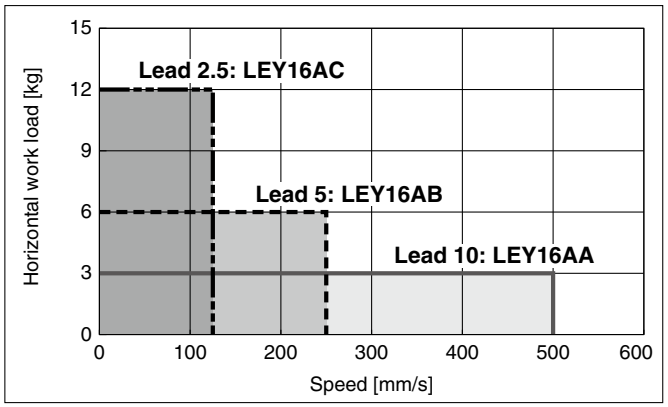

LEY25□A

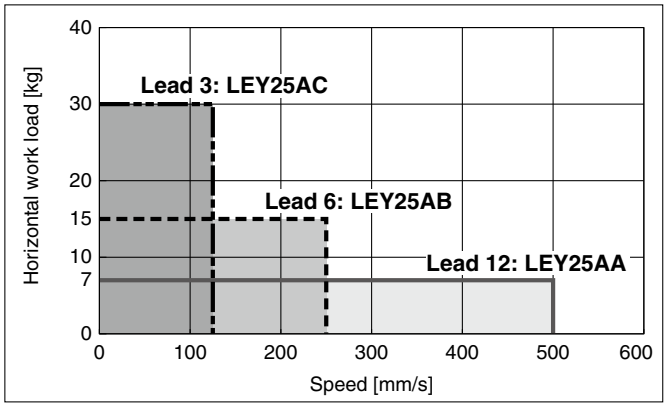

Vertical

LEY16□A

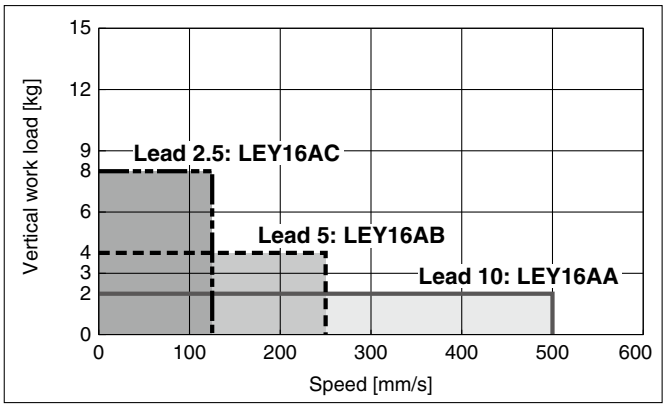

LEY25□A

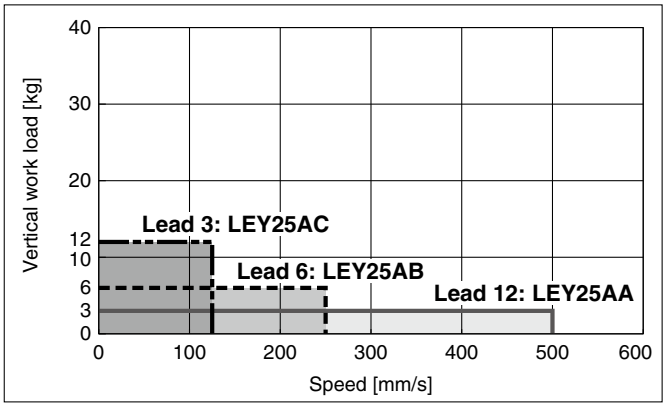

Graph of Allowable Lateral Load on the Rod End (Guide)

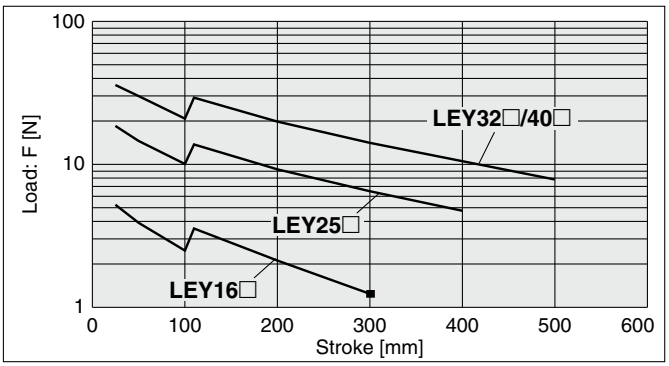

[Stroke] = [Product stroke] + [Distance from the rod end to the center of gravity of the workpiece]

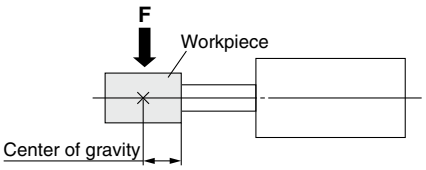

∗ The changes in the graph waveforms are due to the difference in components of different product strokes.

Rod Displacement: δ [mm]

Size \ Stroke	30	50	100	150	200	250	300	350	400	450	500
16	±0.4	±0.5	±0.9	±0.8	±1.1	±1.3	±1.5	—	—	—	—
25	±0.3	±0.4	±0.7	±0.7	±0.9	±1.1	±1.3	±1.5	±1.7	—	—
32, 40	±0.3	±0.4	±0.7	±0.6	±0.8	±1.0	±1.1	±1.3	±1.5	±1.7	±1.8

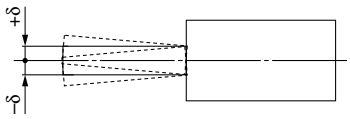

∗ The values without a load are shown.

Non-rotating Accuracy of Rod

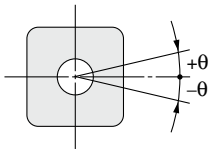

Size	Non-rotating accuracy θ
16	±1.1°
25	±0.8°
32	±0.7°
40	

∗ Avoid using the electric actuator in such a way that rotational torque would be applied to the piston rod.
Failure to do so may result in the deformation of the non-rotating guide, abnormal auto switch responses, play in the internal guide, or an increase in the sliding resistance.

Force Conversion Graph (Guide)

Step Motor (Servo/24 VDC)

LEY16

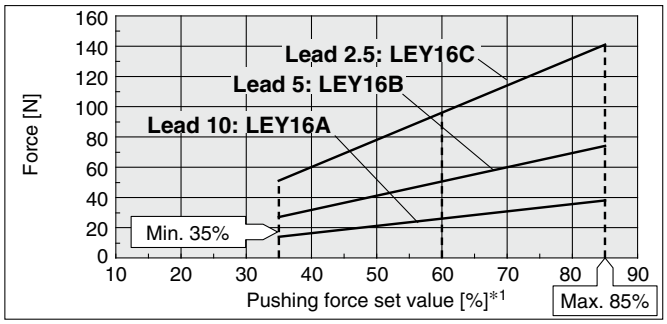

Ambient temperature	Pushing force set value [%]	Duty ratio [%]	Continuous pushing time [min]
25°C or less	85 or less	100	No restriction
40°C	40 or less	100	No restriction
	50	70	12 or less
	70	20	1.3 or less
	85	15	0.8 or less

LEY25

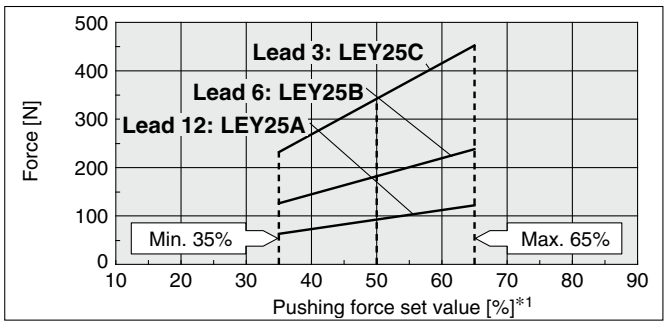

Ambient temperature	Pushing force set value [%]	Duty ratio [%]	Continuous pushing time [min]
40°C or less	65 or less	100	No restriction

LEY32

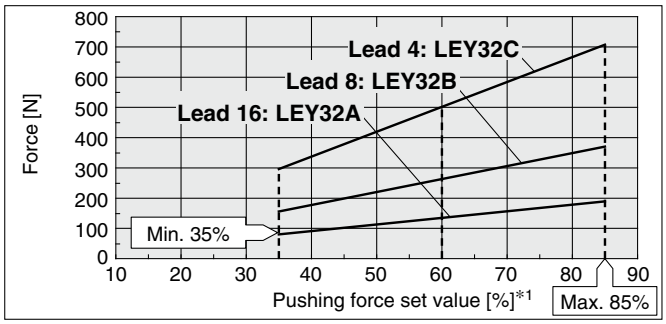

Ambient temperature	Pushing force set value [%]	Duty ratio [%]	Continuous pushing time [min]
25°C or less	85 or less	100	No restriction
40°C	65 or less	100	No restriction
	85	50	15 or less

LEY40

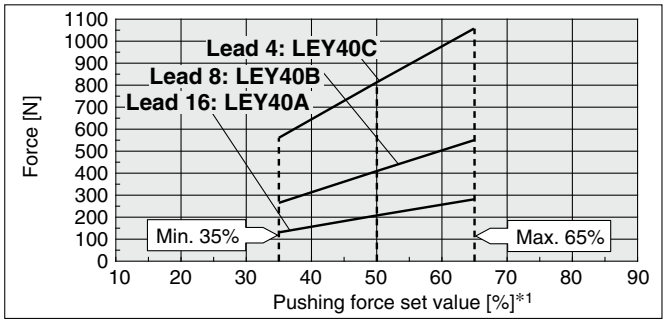

Ambient temperature	Pushing force set value [%]	Duty ratio [%]	Continuous pushing time [min]
40°C or less	65 or less	100	No restriction

*1 Set values for the controller

Servo Motor (24 VDC)

LEY16□A

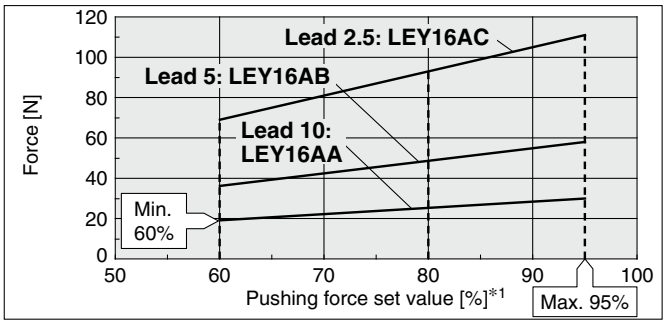

Ambient temperature	Pushing force set value [%]	Duty ratio [%]	Continuous pushing time [min]
40°C or less	95 or less	100	No restriction

LEY25□A

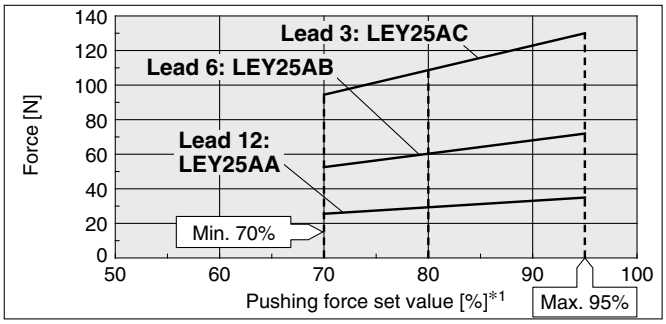

Ambient temperature	Pushing force set value [%]	Duty ratio [%]	Continuous pushing time [min]
40°C or less	95 or less	100	No restriction

<Limit Values for Pushing Force and Trigger Level in Relation to Pushing Speed>
Without Load

Model	Lead	Pushing speed [mm/s]	Pushing force (Setting input value)
LEY16	A/B/C	21 to 50	60 to 85%
LEY25	A/B/C	21 to 35	50 to 65%
LEY32	A	24 to 30	60 to 85%
	B/C	21 to 30	
LEY40	A	24 to 30	50 to 65%
	B/C	21 to 30	

Model	Lead	Pushing speed [mm/s]	Pushing force (Setting input value)
LEY16□A	A/B/C	21 to 50	80 to 95%
LEY25□A	A/B/C	21 to 35	80 to 95%

There is a limit to the pushing force in relation to the pushing speed. If the product is operated outside of the range (low pushing force), the completion signal [INP] may be output before the pushing operation has been completed (during the moving operation). If operating with the pushing speed below the min. speed, please check for operating problems before using the product.

<Set Values for Vertical Upward Transfer Pushing Operations>

For vertical loads (upward), set the pushing force to the max. value shown below and operate at the work load or less.

Model	LEY16□			LEY25□			LEY32□			LEY40□			LEY16□A			LEY25□A		
Lead	A	B	C	A	B	C	A	B	C	A	B	C	A	B	C	A	B	C
Work load [kg]	1	1.5	3	2.5	5	10	4.5	9	18	7	14	28	1	1.5	3	1.2	2.5	5
Pushing force	85%			65%			85%			65%			95%			95%		

Model Selection

Size 25, 32, 63, 100

LEY Series ▶p. 473, 485 LECY□ Series ▶p. 489
LEY-X5 Series ▶p. 925 25A-LEY Series ▶p. 987

Selection Procedure

Positioning Control Selection Procedure

Step 1 Check the work load–speed. (Vertical transfer) → **Step 2** Check the cycle time.

Selection Example

Operating conditions

- Workpiece mass: 16 [kg]
- Speed: 300 [mm/s]
- Acceleration/Deceleration: 5000 [mm/s²]
- Stroke: 300 [mm]
- Workpiece mounting condition: Vertical upward downward transfer

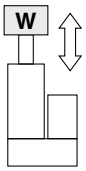

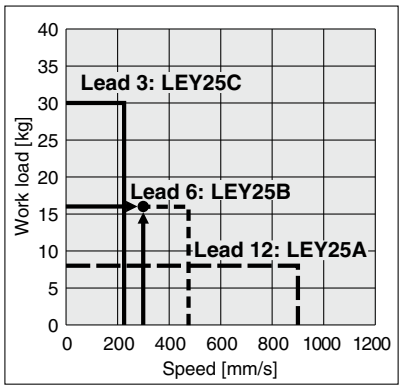

<Speed–Vertical work load graph> (LEY25)

Step 1 Check the work load–speed. <Speed–Vertical work load graph>

Select a model based on the workpiece mass and speed while referencing the speed–vertical work load graph.

Selection example) The **LEY25B** can be temporarily selected as a possible candidate based on the graph shown on the right side.

* It is necessary to mount a guide outside the actuator when used for horizontal transfer. When selecting the target model, refer to the horizontal work load in the specifications on pages 475 to 477, 486, and 927 and the precautions.

The regeneration option may be necessary. Refer to pages 435 and 436 for the "Required Conditions for the Regeneration Option."

Step 2 Check the cycle time.

Calculate **the cycle time** using the following calculation method.

Cycle time:

T can be found from the following equation.

$$T = T1 + T2 + T3 + T4 \text{ [s]}$$

- T1: Acceleration time and T3: Deceleration time can be found by the following equation.

$$T1 = V/a1 \text{ [s]} \qquad T3 = V/a2 \text{ [s]}$$

- T2: Constant speed time can be found from the following equation.

$$T2 = \frac{L - 0.5 \cdot V \cdot (T1 + T3)}{V} \text{ [s]}$$

- T4: Settling time varies depending on the motor type and load. The value below is recommended.

$$T4 = 0.05 \text{ [s]}$$

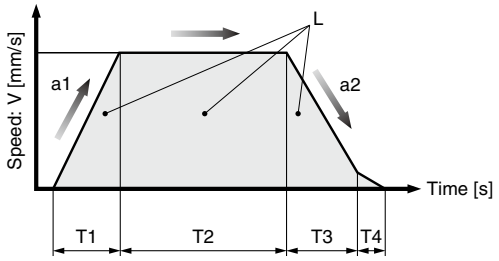

L : Stroke [mm] ··· (Operating condition)
V : Speed [mm/s] ··· (Operating condition)
a1: Acceleration [mm/s²] ··· (Operating condition)
a2: Deceleration [mm/s²] ··· (Operating condition)

T1: Acceleration time [s] ··· Time until reaching the set speed
T2: Constant speed time [s] ··· Time while the actuator is operating at a constant speed
T3: Deceleration time [s] ··· Time from the beginning of the constant speed operation to stop
T4: Settling time [s] ··· Time until positioning is completed

Calculation example)
T1 to T4 can be calculated as follows.

$$T1 = V/a1 = 300/5000 = 0.06 \text{ [s]}, \quad T3 = V/a2 = 300/5000 = 0.06 \text{ [s]}$$

$$T2 = \frac{L - 0.5 \cdot V \cdot (T1 + T3)}{V} = \frac{300 - 0.5 \cdot 300 \cdot (0.06 + 0.06)}{300} = 0.94 \text{ [s]}$$

$$T4 = 0.05 \text{ [s]}$$

The cycle time can be found as follows.

$T = T1 + T2 + T3 + T4 = 0.06 + 0.94 + 0.06 + 0.05 =$ **1.11 [s]**

Based on the above calculation result, the LEY25S2B-300 should be selected.

Selection Procedure

Force Control Selection Procedure

Step 1 Check the duty ratio. → **Step 2** Check the force. → **Step 3** Check the lateral load on the rod end.

∗ The duty ratio is a ratio of the operation time in one cycle.

Selection Example

Operating conditions

- Mounting condition: Horizontal (pushing)
- Attachment weight: 0.5 [kg]
- Force: 255 [N]
- Duty ratio: 60 [%]
- Speed: 100 [mm/s]
- Stroke: 300 [mm]

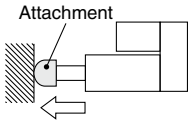

Step 1 **Check the duty ratio.**
<Conversion table of force–duty ratio>

Select the [Force] from the duty ratio while referencing the conversion table of force–duty ratio.

Selection example)
Based on the table below,
- Duty ratio: 60 [%]

Torque limit/Command value will be 30 [%].

<Conversion table of force–duty ratio>
(LEY25/AC Servo motor)

Torque limit/ Command value [%]	Duty ratio [%]	Continuous pushing time [min]
25 or less	100	No restriction
30	60	1.5 or less

∗ [Torque limit/Command value [%]] is the set value for the driver.
∗ [Continuous pushing time] is the time that the actuator can continuously keep pushing.

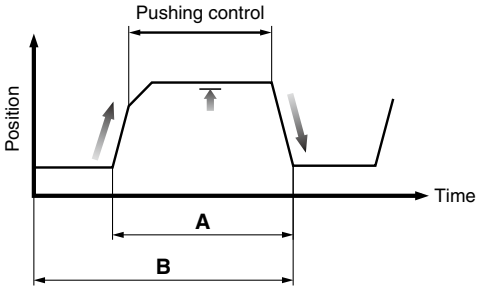

Duty ratio = A/B x 100 [%]

Step 2 **Check the force.**
<Force conversion graph>

Select a model based on the torque limit/command value and pushing force while referencing the force conversion graph.

Selection example)
Based on the graph shown on the right side,
- Torque limit/Command value: 30 [%]
- Force: 255 [N]

The **LEY25B** can be temporarily selected as a possible candidate.

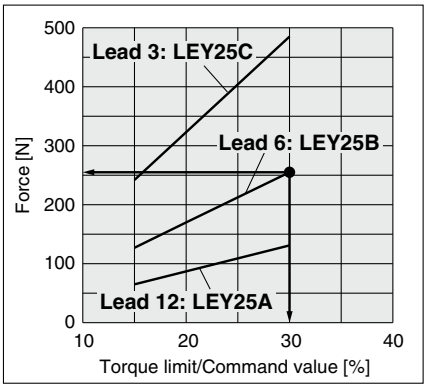

<Force conversion graph>
(LEY25)

Step 3 **Check the lateral load on the rod end.**
<Graph of allowable lateral load on the rod end>

Confirm the allowable lateral load on the rod end of the actuator: LEY25B, which has been selected temporarily while referencing the graph of allowable lateral load on the rod end.

Selection example)
Based on the graph shown on the right side,
- Attachment weight: 0.5 [kg] ≈ 5 [N]
- Product stroke: 300 [mm]

The lateral load on the rod end is in the allowable range.

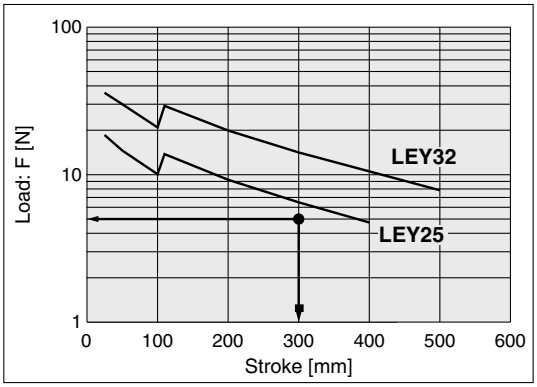

<Graph of allowable lateral load on the rod end>

Based on the above calculation result, the LEY25S2B-300 should be selected.

∗ For pushing operations, check the list of applicable drivers. (Refer to page 1101.)

Speed–Vertical Work Load Graph/Required Conditions for the Regeneration Option

LEY25□S$^{2}_{6}$/T6 (Motor mounting position: Parallel/In-line)

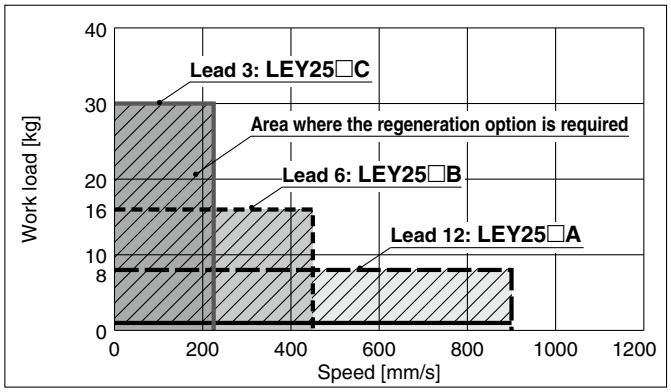

LEY32□S$^{3}_{7}$/T7 (Motor mounting position: Parallel)

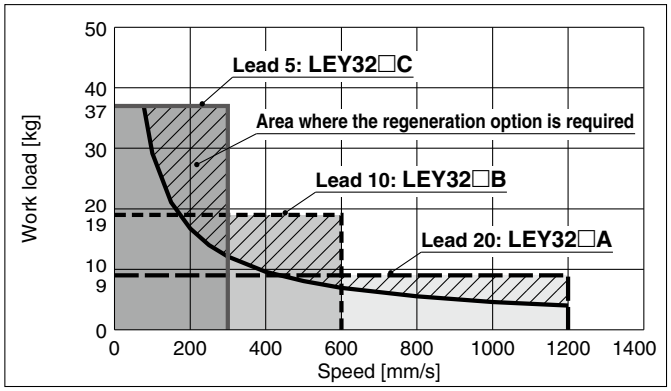

LEY63□S$^{4}_{8}$/T8 (Motor mounting position: Parallel/In-line)

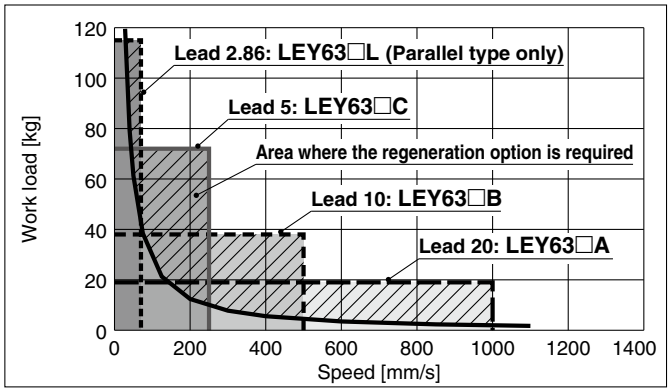

LEY100□T9 (Motor mounting position: Parallel/In-line)

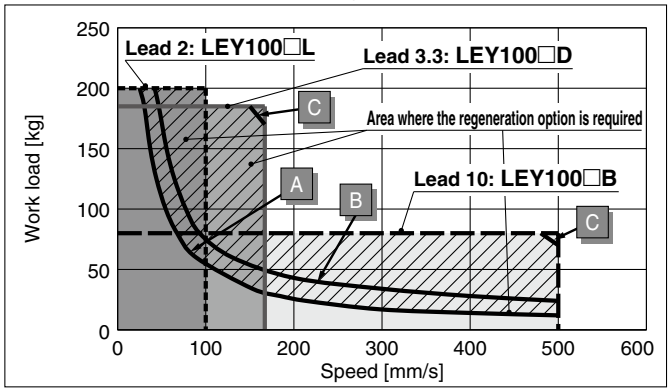

Required conditions for the regeneration option

∗ The regeneration option is required when using the product above the regeneration line in the graph. (It must be ordered separately.)

Regeneration Option Models

Size	Model	Note
LEY25□	LEC-MR-RB-032	—
LEY32□	LEC-MR-RB-032	—
LEY63□	LEC-MR-RB-12	—
LEY100□	LEC-MR-RB-032	A area
	LEC-MR-RB-12	B area
		C area

LEY32DS$^{3}_{7}$/T7 (Motor mounting position: In-line)

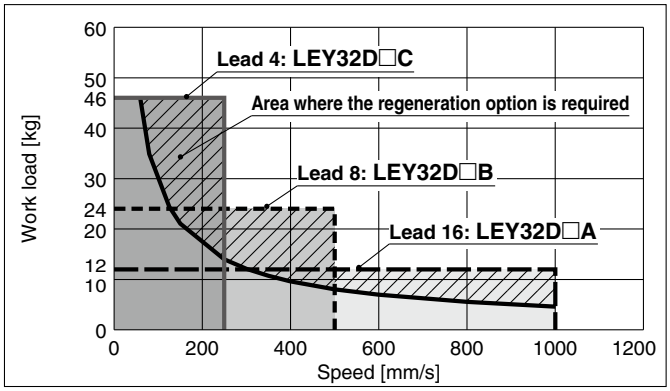

Operating condition	Regenerative condition Duty ratio
A area	100%
B area	
C area	90%

Speed–Horizontal Work Load Graph/Required Conditions for the Regeneration Option

LEY25□S$^{2}_{6}$/T6 (Motor mounting position: Parallel/In-line)

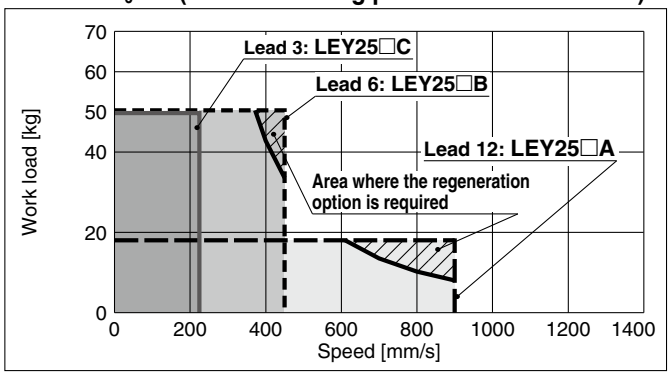

Required conditions for the regeneration option

∗ The regeneration option is required when using the product above the regeneration line in the graph. (It must be ordered separately.)

Regeneration Option Models

Size	Model	Note
LEY25□	LEC-MR-RB-032	—
LEY32□	LEC-MR-RB-032	—
LEY63□	—	—
LEY100□	LEC-MR-RB-032	A area

LEY32□S$^{3}_{7}$/T7 (Motor mounting position: Parallel)

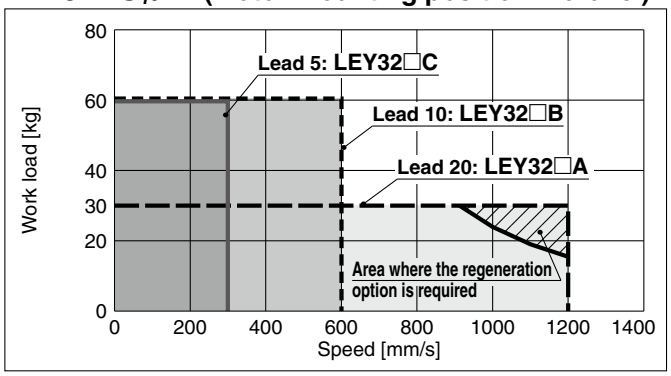

LEY32DS$^{3}_{7}$/T7 (Motor mounting position: In-line)

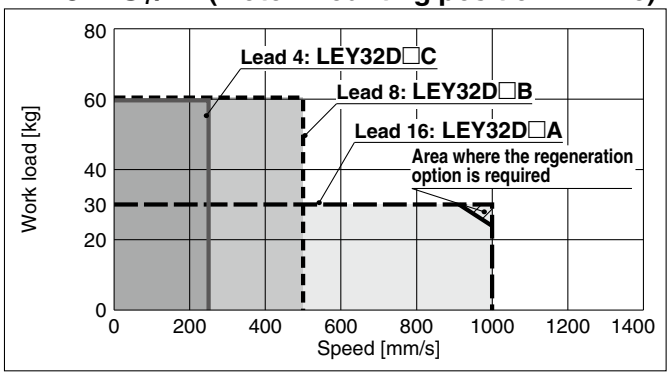

LEY63□S$^{4}_{8}$/T8 (Motor mounting position: Parallel/In-line)

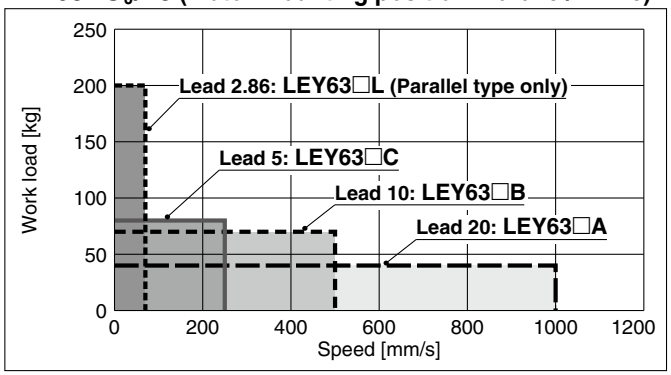

LEY100□T9 (Motor mounting position: Parallel/In-line)

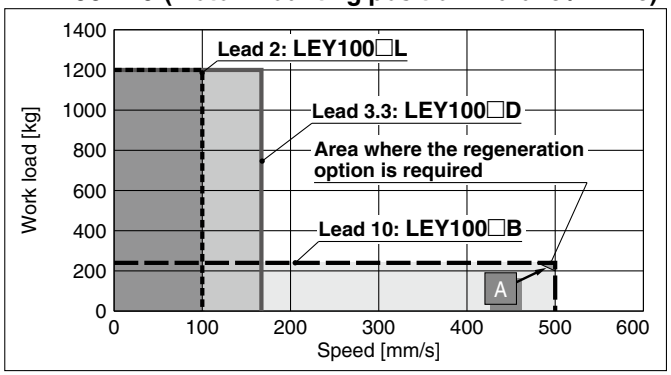

Allowable Stroke Speed

[mm/s]

Model	AC servo motor	Lead Symbol	Lead [mm]	Stroke [mm] 30	50	100	150	200	250	300	350	400	450	500	600	700	800	900	1000
LEY25□S$^{2}_{6}$/T6 (Motor mounting position: Parallel/In-line)	100 W /□40	**A**	12	900							600		—	—	—				
		B	6	450							300		—	—	—				
		C	3	225							150		—	—	—				
		(Motor rotation speed)		(4500 rpm)							(3000 rpm)		—	—	—				
LEY32□S$^{3}_{7}$/T7 (Motor mounting position: Parallel)	200 W /□60	**A**	20	1200									800		—				
		B	10	600									400		—				
		C	5	300									200		—				
		(Motor rotation speed)		(3600 rpm)									(2400 rpm)		—				
LEY32DS$^{3}_{7}$/T7 (Motor mounting position: In-line)	200 W /□60	**A**	16	1000									640		—				
		B	8	500									320		—				
		C	4	250									160		—				
		(Motor rotation speed)		(3750 rpm)									(2400 rpm)		—				
LEY63□S$^{4}_{8}$/T8 (Motor mounting position: Parallel/In-line)	400 W /□60	**A**	20	—	1000										800	600	500	—	
		B	10	—	500										400	300	250	—	
		C	5	—	250										200	150	125	—	
		(Motor rotation speed)		—	(3000 rpm)										(2400 rpm)	(1800 rpm)	(1500 rpm)	—	
		L∗1	2.86	—	70													—	
		(Motor rotation speed)		—	(1470 rpm)													—	
LEY100□T9 (Motor mounting position: Parallel/In-line)	750 W /□80	**B**	10	—	500										371	285	225	183	151
		D	3.3	—	167										124	95	75	61	50
		L	2	—	100										74	57	45	37	30
		(Motor rotation speed)		—	(3000 rpm)										(2225 rpm)	(1708 rpm)	(1353 rpm)	(1098 rpm)	(908 rpm)

∗1 Parallel type only

Force Conversion Graph (Guide)
For the LECSA

LEY25□S2 (Motor mounting position: Parallel/In-line)

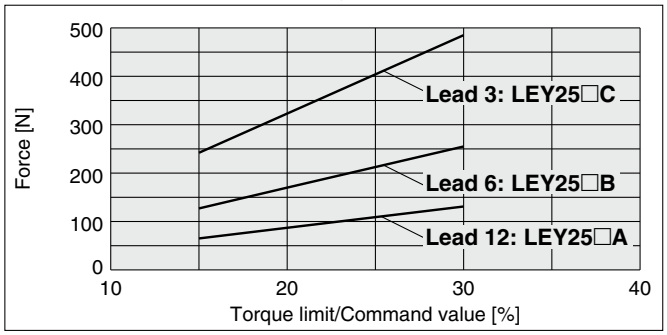

Torque limit/Command value [%]	Duty ratio [%]	Continuous pushing time [min]
25 or less	100	No restriction
30	60	1.5 or less

LEY32□S3 (Motor mounting position: Parallel)

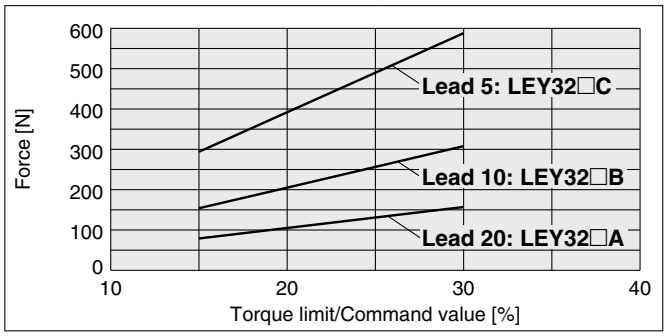

Torque limit/Command value [%]	Duty ratio [%]	Continuous pushing time [min]
25 or less	100	No restriction
30	60	1.5 or less

LEY32DS3 (Motor mounting position: In-line)

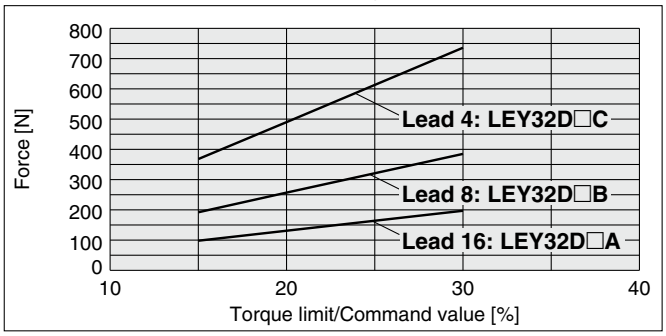

Torque limit/Command value [%]	Duty ratio [%]	Continuous pushing time [min]
25 or less	100	No restriction
30	60	1.5 or less

LEY63□S4 (Motor mounting position: Parallel/In-line)

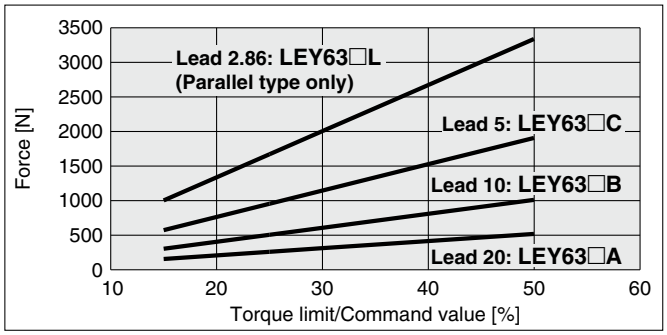

Torque limit/Command value [%]	Duty ratio [%]	Continuous pushing time [min]
25 or less	100	No restriction
30	60	1.5 or less
40	30	0.5 or less
50	20	0.16 or less

Force Conversion Graph (Guide)
For the LECS□-T

LEY25□T6 (Motor mounting position: Parallel/In-line)

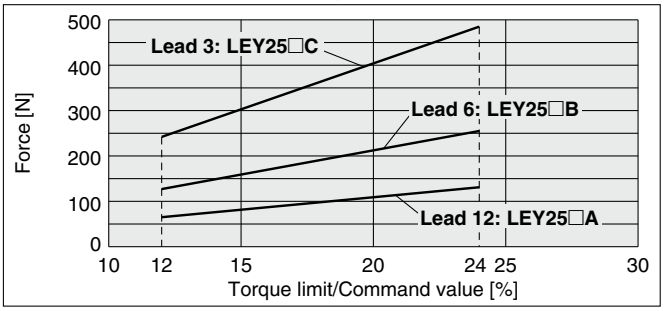

Torque limit/Command value [%]	Duty ratio [%]	Continuous pushing time [min]
20 or less	100	—
24	60	1.5 or less

LEY32□T7 (Motor mounting position: Parallel)

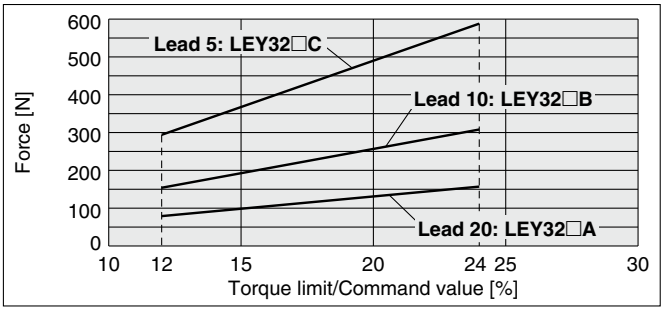

Torque limit/Command value [%]	Duty ratio [%]	Continuous pushing time [min]
20 or less	100	—
24	60	1.5 or less

LEY32DT7 (Motor mounting position: In-line)

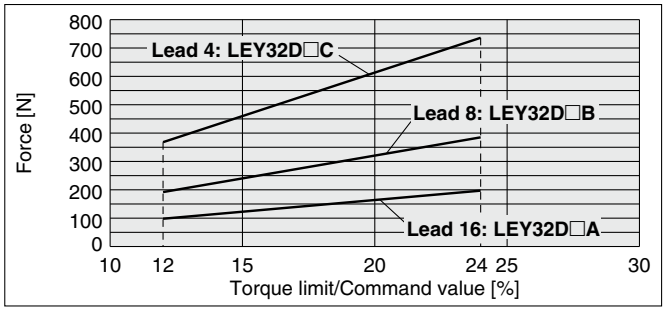

Torque limit/Command value [%]	Duty ratio [%]	Continuous pushing time [min]
20 or less	100	—
24	60	1.5 or less

LEY63□T8 (Motor mounting position: Parallel/In-line)

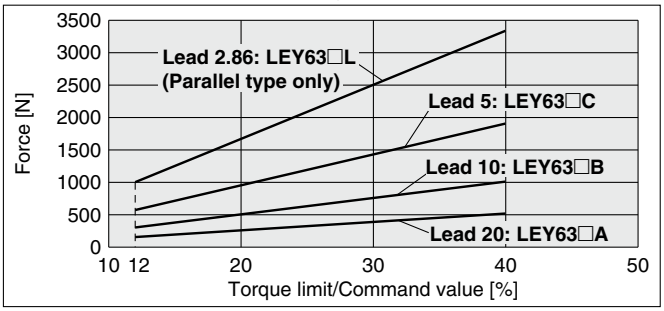

Torque limit/Command value [%]	Duty ratio [%]	Continuous pushing time [min]
20 or less	100	—
24	60	1.5 or less
32	30	0.5 or less
40	20	0.16 or less

LEY100□T9 (Motor mounting position: Parallel/In-line)

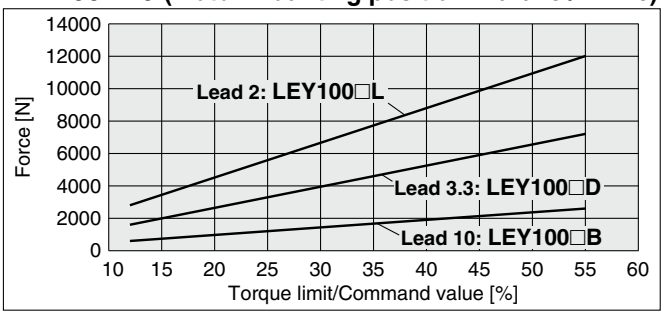

Torque limit/Command value [%]	Duty ratio [%]	Continuous pushing time [min]
25 or less	100	—
30	90	6.00 or less
40	50	1.23 or less
50	30	0.57 or less
55	20	0.25 or less

Load–Acceleration/Deceleration Graph

∗ The values shown below are allowable values of the actuator body.
Do not use the actuator so that it exceeds these specification ranges.

Max. Acceleration/Deceleration (Horizontal)

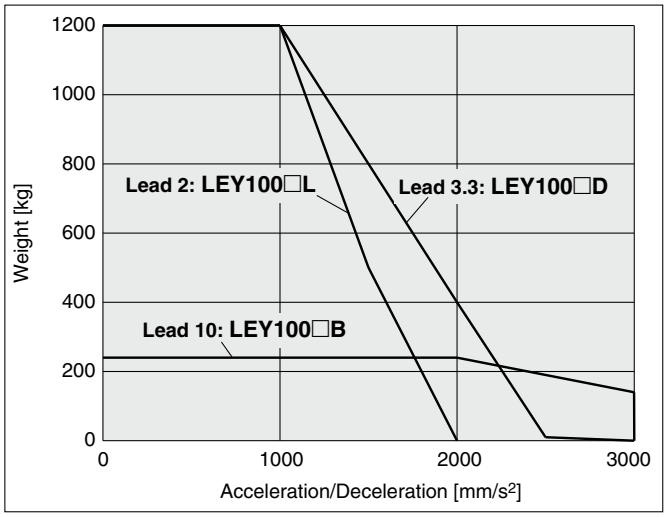

Max. Acceleration/Deceleration (Vertical)

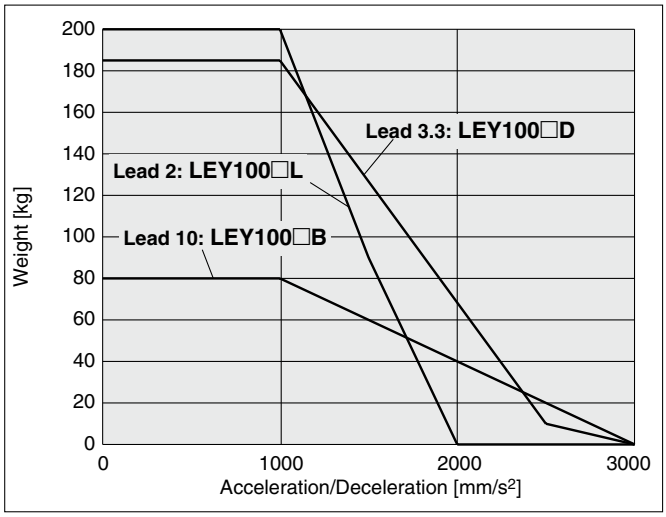

Force–Stroke Graph

∗ The values shown below are allowable values of the actuator body.
Do not use the actuator so that it exceeds these specification ranges.

Force and Stroke

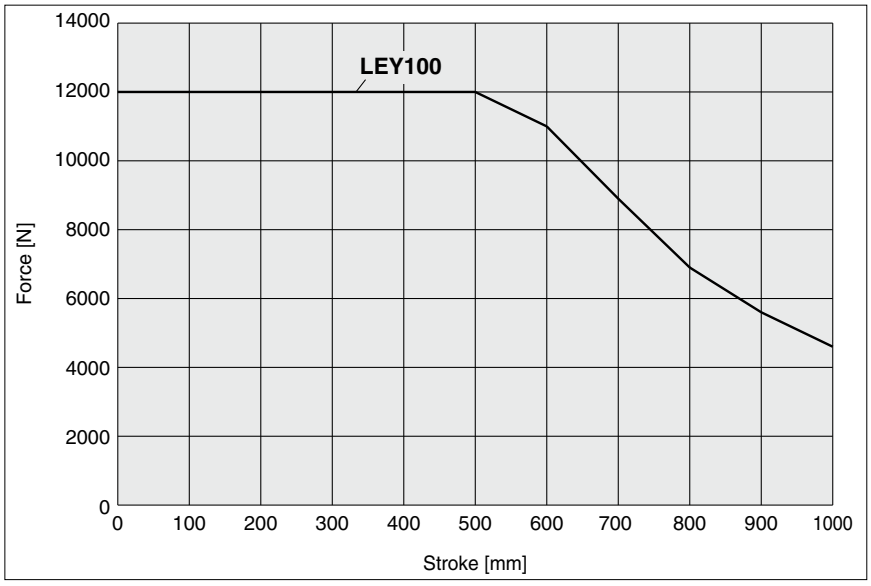

Graph of Allowable Lateral Load on the Rod End (Guide)

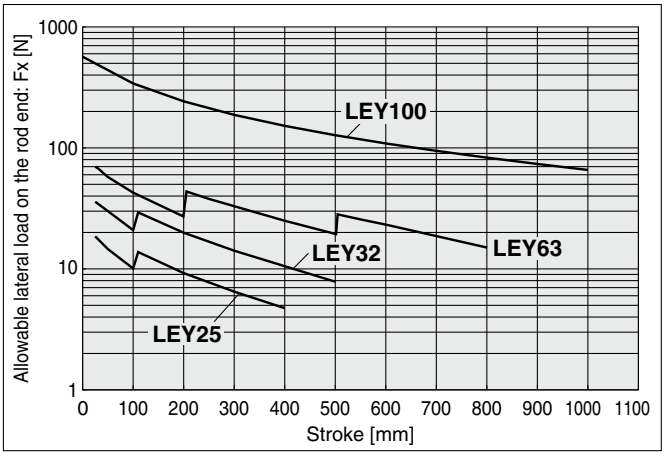

∗ The changes in the graph waveforms are due to the difference in components of different product strokes.

[Stroke] = [Product stroke] + [Distance from the rod end to the center of gravity of the workpiece]

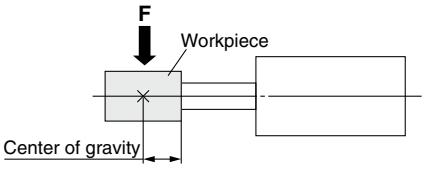

Rod Displacement: δ [mm]

Size \ Stroke	30	50	100	150	200	250	300	350	400	450	500	600	700	800	900	1000
25	±0.3	±0.4	±0.7	±0.7	±0.9	±1.1	±1.3	±1.5	±1.7	—	—	—	—	—	—	—
32	±0.3	±0.4	±0.7	±0.6	±0.8	±1.0	±1.1	±1.3	±1.5	±1.7	±1.8	—	—	—	—	—
63	—	±0.5	±0.7	±0.9	±1.2	±1.1	±1.3	±1.5	±1.7	±1.9	±2.1	±1.7	±2.0	±2.2	—	—
100	—	—	±0.8	—	±1.3	—	±1.9	—	±2.4	—	±2.9	±3.5	±4.0	±4.5	±5.1	±5.6

∗ The values without a load are shown.

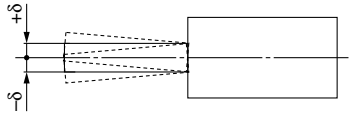

Non-rotating Accuracy of Rod

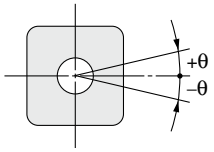

Size	Non-rotating accuracy θ
25	±0.8°
32	±0.7°
63	±0.6°
100	±0.6°

∗ Avoid using the electric actuator in such a way that rotational torque would be applied to the piston rod.
Failure to do so may result in the deformation of the non-rotating guide, abnormal auto switch responses, play in the internal guide, or an increase in the sliding resistance.

Model Selection

Size 25, 32, 63

LEY Series ▶p. 489 LECS□ Series ▶p. 473, 485
LEY-X5 Series ▶p. 931 25A-LEY Series ▶p. 989

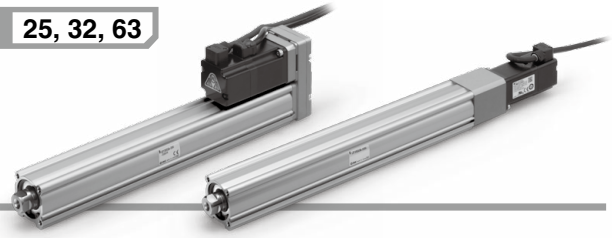

Selection Procedure

Positioning Control Selection Procedure

Step 1 Check the work load–speed. (Vertical transfer) → **Step 2** Check the cycle time.

Selection Example

Operating conditions

- Workpiece mass: 16 [kg]
- Speed: 300 [mm/s]
- Acceleration/Deceleration: 5000 [mm/s²]
- Stroke: 300 [mm]
- Workpiece mounting condition: Vertical upward downward transfer

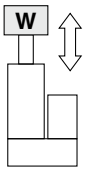

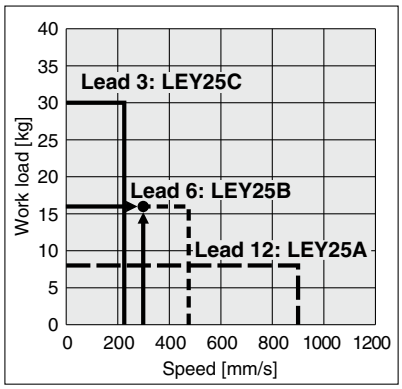

<Speed–Vertical work load graph> (LEY25)

Step 1 **Check the work load–speed. <Speed–Vertical work load graph>**

Select a model based on the workpiece mass and speed while referencing the speed–vertical work load graph.

Selection example) The **LEY25B** can be temporarily selected as a possible candidate based on the graph shown on the right side.

* It is necessary to mount a guide outside the actuator when used for horizontal transfer. When selecting the target model, refer to the horizontal work load in the specifications on pages 491 and 492 and the precautions.

The regenerative resistor may be necessary. Refer to pages 443 and 444 for the "Required Conditions for the Regenerative Resistor (Guide)."

Step 2 **Check the cycle time.**

Calculate **the cycle time** using the following calculation method.

Cycle time:

T can be found from the following equation.

$$T = T1 + T2 + T3 + T4 \text{ [s]}$$

- T1: Acceleration time and T3: Deceleration time can be found by the following equation.

$$T1 = V/a1 \text{ [s]} \qquad T3 = V/a2 \text{ [s]}$$

- T2: Constant speed time can be found from the following equation.

$$T2 = \frac{L - 0.5 \cdot V \cdot (T1 + T3)}{V} \text{ [s]}$$

- T4: Settling time varies depending on the motor type and load. The value below is recommended.

$$T4 = 0.05 \text{ [s]}$$

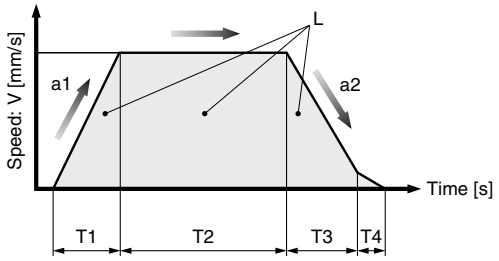

L : Stroke [mm] ··· (Operating condition)
V : Speed [mm/s] ··· (Operating condition)
a1: Acceleration [mm/s²] ··· (Operating condition)
a2: Deceleration [mm/s²] ··· (Operating condition)

T1: Acceleration time [s] ··· Time until reaching the set speed
T2: Constant speed time [s] ··· Time while the actuator is operating at a constant speed
T3: Deceleration time [s] ··· Time from the beginning of the constant speed operation to stop
T4: Settling time [s] ··· Time until positioning is completed

Calculation example)
T1 to T4 can be calculated as follows.

$$T1 = V/a1 = 300/5000 = 0.06 \text{ [s]}, \quad T3 = V/a2 = 300/5000 = 0.06 \text{ [s]}$$

$$T2 = \frac{L - 0.5 \cdot V \cdot (T1 + T3)}{V} = \frac{300 - 0.5 \cdot 300 \cdot (0.06 + 0.06)}{300} = 0.94 \text{ [s]}$$

$$T4 = 0.05 \text{ [s]}$$

The cycle time can be found as follows.
T = T1 + T2 + T3 + T4 = 0.06 + 0.94 + 0.06 + 0.05 = **1.11 [s]**

Based on the above calculation result, the LEY25V6B-300 should be selected.

Selection Procedure

Control Selection Procedure

Step 1 Check the duty ratio. → **Step 2** Check the force. → **Step 3** Check the lateral load on the rod end.

∗ The duty ratio is a ratio of the operation time in one cycle.

Selection Example

Operating conditions

- Mounting condition: Horizontal (pushing)
- Attachment weight: 0.5 [kg]
- Force: 255 [N]
- Duty ratio: 60 [%]
- Pushing speed: 35 [mm/s]
- Stroke: 300 [mm]

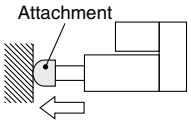

Step 1 **Check the duty ratio.**
<Conversion table of force–duty ratio>

Select the [force] from the duty ratio while referencing the conversion table of force–duty ratio.

Selection example)
Based on the table below,
- Duty ratio: 60 [%]

Torque limit/command value will be 90 [%].

<Conversion table of force–duty ratio>
(LEY25/AC Servo motor)

Torque limit/ Command value [%]	Duty ratio [%]	Continuous pushing time [min]
75 or less	100	No restriction
90	60	1.5 or less

∗ [Force set value] is one of the data input to the driver.
∗ [Continuous pushing time] is the time that the actuator can continuously keep pushing.

Step 2 **Check the pushing force.**
<Force conversion graph>

Select a model based on the torque limit/command value and pushing force while referencing the force conversion graph.

Selection example)
Based on the graph shown on the right side,
- Torque limit/Command value: 90 [%]
- Force: 255 [N]

The **LEY25B** can be temporarily selected as a possible candidate.

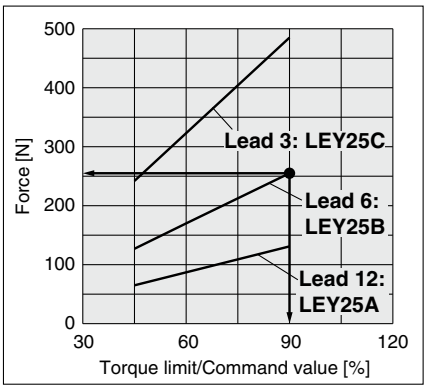

<Force conversion graph>
(LEY25)

Step 3 **Check the lateral load on the rod end.**
<Graph of allowable lateral load on the rod end>

Confirm the allowable lateral load on the rod end of the actuator: LEY25B, which has been selected temporarily while referencing the graph of allowable lateral load on the rod end.

Selection example)
Based on the graph shown on the right side,
- Attachment weight: 0.5 [kg] ≈ 5 [N]
- Product stroke: 300 [mm]

The lateral load on the rod end is in the allowable range.

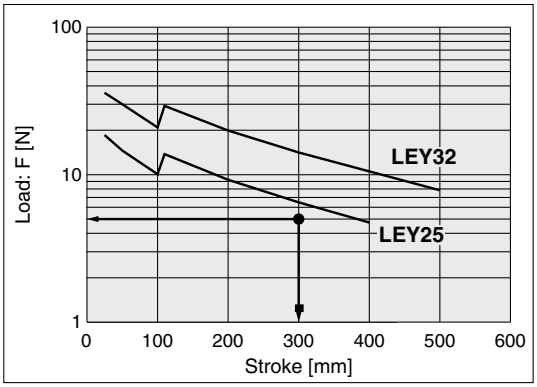

<Graph of allowable lateral load on the rod end>

Based on the above calculation result, the LEY25V6B-300 should be selected.

Speed–Work Load Graph/Required Conditions for the Regenerative Resistor (Guide)

LEY25□V6 (Motor mounting position: Parallel/In-line)

Horizontal

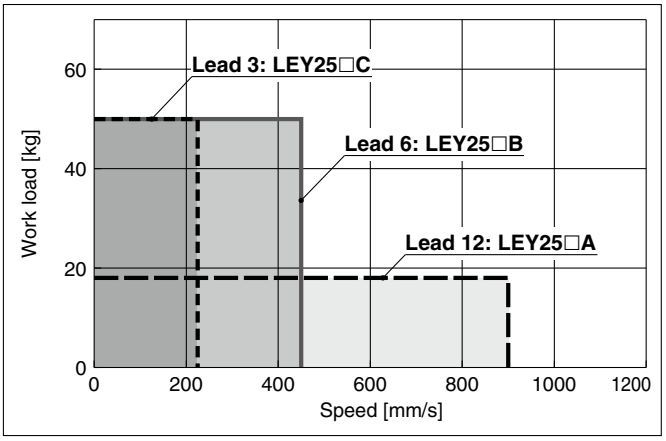

Vertical

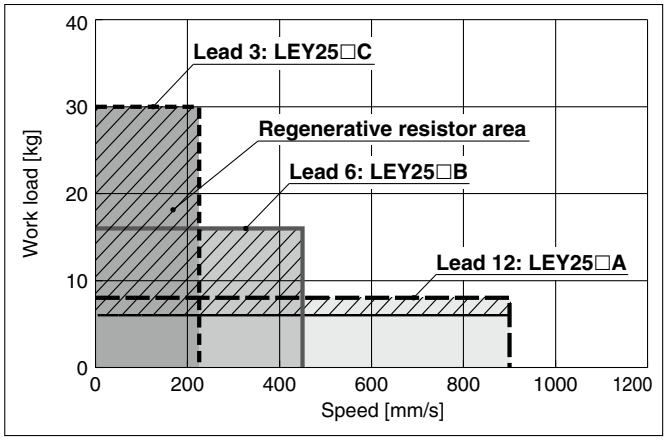

LEY32□V7 (Motor mounting position: Parallel)

Horizontal

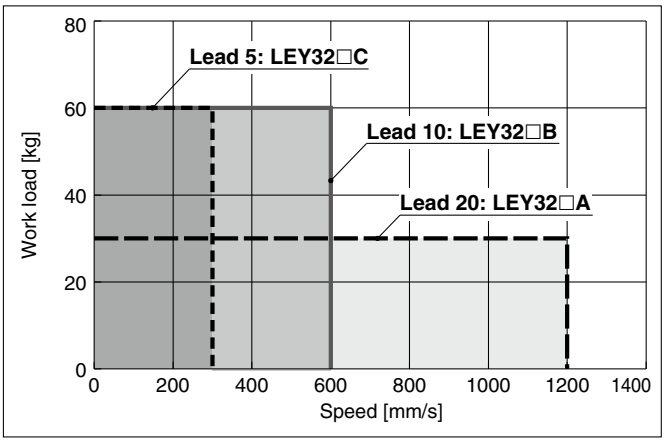

Vertical

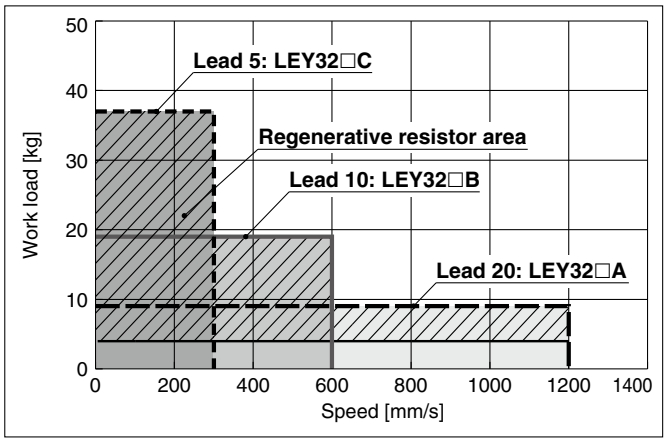

LEY32DV7 (Motor mounting position: In-line)

Horizontal

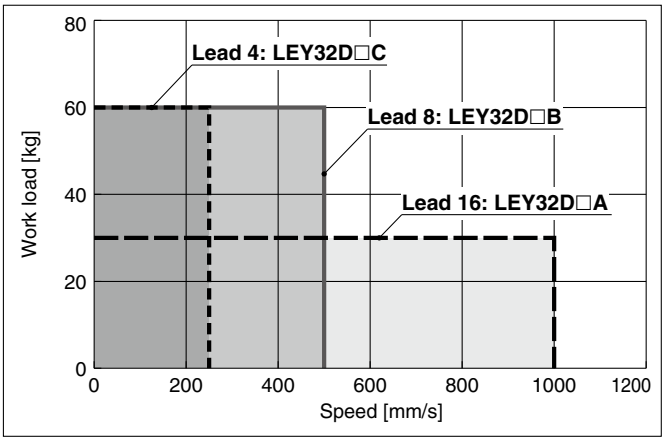

Vertical

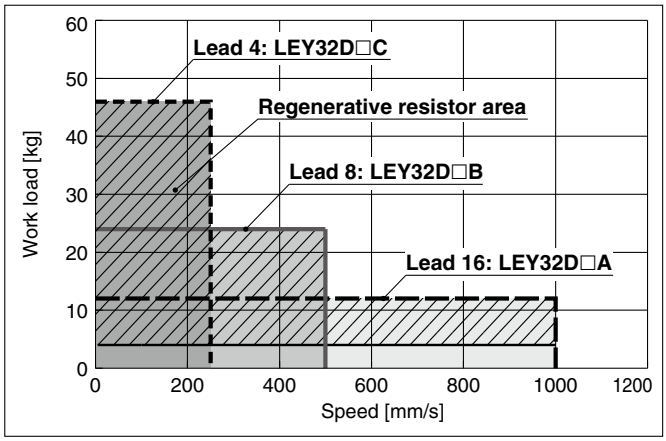

Regenerative resistor area

- When using the actuator in the regenerative resistor area, download the "AC servo drive capacity selection program/SigmaJunmaSize+" from the SMC website. Then, calculate the necessary regenerative resistor capacity to prepare an appropriate external regenerative resistor.
- The regenerative resistor should be provided by the customer.

Applicable Motors/Drivers

Model	Applicable model	
	Motor	Servopack (SMC driver)
LEY25□	SGMJV-01A3A	SGDV-R90A11□ (LECYM2-V5) SGDV-R90A21□ (LECYU2-V5)
LEY32□	SGMJV-02A3A	SGDV-1R6A11□ (LECYM2-V7) SGDV-1R6A21□ (LECYU2-V7)

Speed–Work Load Graph/Required Conditions for the Regenerative Resistor (Guide)

LEY63□V8 (Motor mounting position: Parallel/In-line)

Horizontal

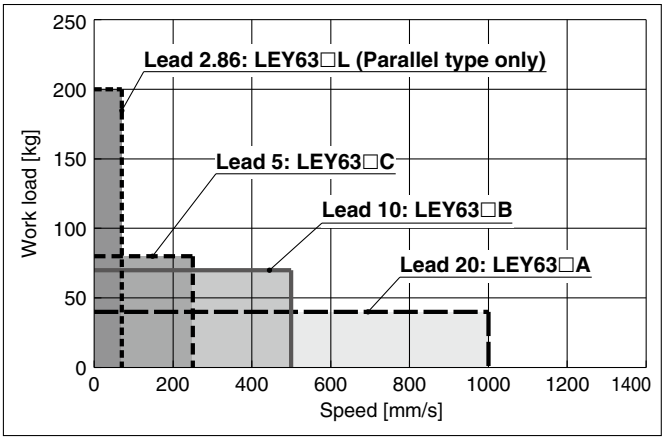

Vertical

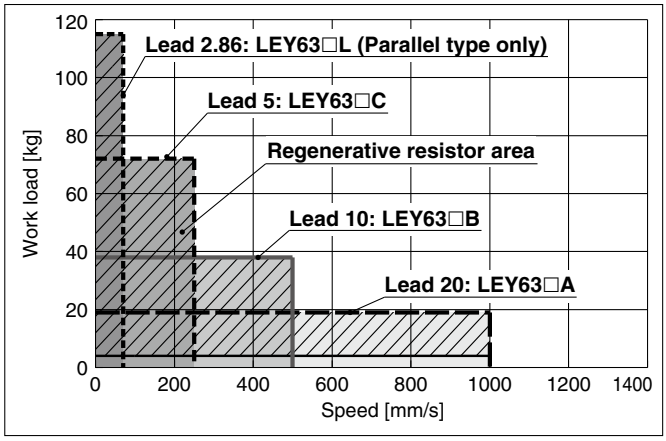

Regenerative resistor area

- When using the actuator in the regenerative resistor area, download the "AC servo drive capacity selection program/SigmaJunmaSize+" from the SMC website. Then, calculate the necessary regenerative resistor capacity to prepare an appropriate external regenerative resistor.
- The regenerative resistor should be provided by the customer.

Applicable Motors/Drivers

Product no.	Applicable model	
	Motor	Servopack (SMC driver)
LEY63□	SGMJV-04A3A	SGDV-2R8A11□ (LECYM2-V8) SGDV-2R8A21□ (LECYU2-V8)

Allowable Stroke Speed

[mm/s]

Model	AC servo motor	Lead		Stroke [mm]													
		Symbol	[mm]	Up to 30	Up to 50	Up to 100	Up to 150	Up to 200	Up to 250	Up to 300	Up to 350	Up to 400	Up to 450	Up to 500	Up to 600	Up to 700	Up to 800
LEY25□V6 (Motor mounting position: Parallel/In-line)	100 W /□40	**A**	12	900							600		—	—	—	—	—
		B	6	450							300		—	—	—	—	—
		C	3	225							150		—	—	—	—	—
		(Motor rotation speed)		(4500 rpm)							(3000 rpm)		—	—	—	—	—
LEY32□V7 (Motor mounting position: Parallel)	200 W /□60	**A**	20	1200									800		—	—	—
		B	10	600									400		—	—	—
		C	5	300									200		—	—	—
		(Motor rotation speed)		(3600 rpm)									(2400 rpm)		—	—	—
LEY32DV7 (Motor mounting position: In-line)	200 W /□60	**A**	16	1000									640		—	—	—
		B	8	500									320		—	—	—
		C	4	250									160		—	—	—
		(Motor rotation speed)		(3750 rpm)									(2400 rpm)		—	—	—
LEY63□V8 (Motor mounting position: Parallel/In-line)	400 W /□60	**A**	20	—	1000										800	600	500
		B	10	—	500										400	300	250
		C	5	—	250										200	150	125
		(Motor rotation speed)		—	(3000 rpm)										(2400 rpm)	(1800 rpm)	(1500 rpm)
		L	2.86	—	70												
		(Motor rotation speed)		—	(1470 rpm)												

Force Conversion Graph (Guide)

LEY25□V6 (Motor mounting position: Parallel/In-line)

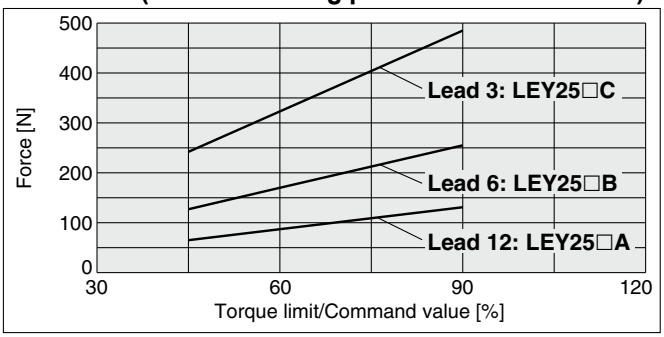

Torque limit/Command value [%]	Duty ratio [%]	Continuous pushing time [min]
75 or less	100	No restriction
90	60	1.5 or less

LEY32□V7 (Motor mounting position: Parallel)

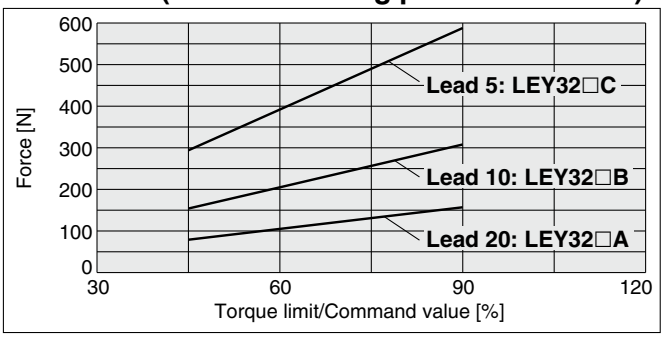

Torque limit/Command value [%]	Duty ratio [%]	Continuous pushing time [min]
75 or less	100	No restriction
90	60	1.5 or less

LEY32DV7 (Motor mounting position: In-line)

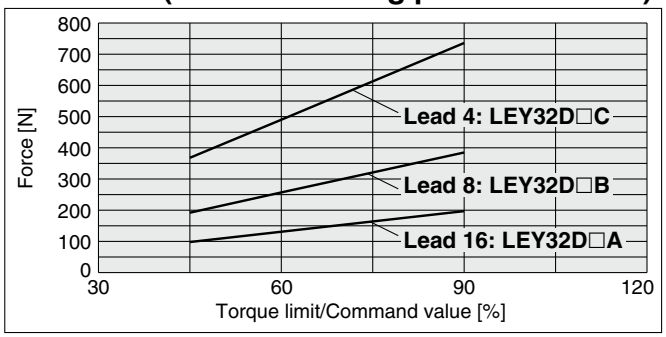

Torque limit/Command value [%]	Duty ratio [%]	Continuous pushing time [min]
75 or less	100	No restriction
90	60	1.5 or less

LEY63□V8 (Motor mounting position: Parallel/In-line)

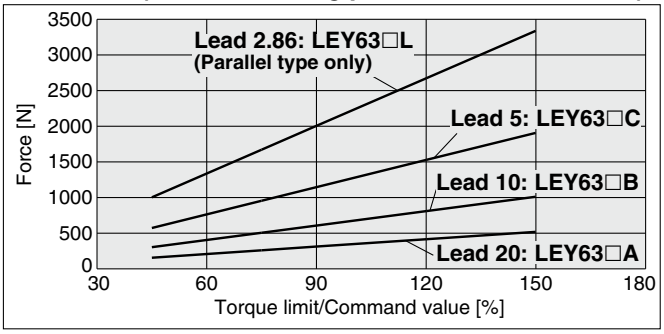

Torque limit/Command value [%]	Duty ratio [%]	Continuous pushing time [min]
75 or less	100	No restriction
90	60	1.5 or less
120	30	0.5 or less
150	20	0.16 or less

Graph of Allowable Lateral Load on the Rod End (Guide)

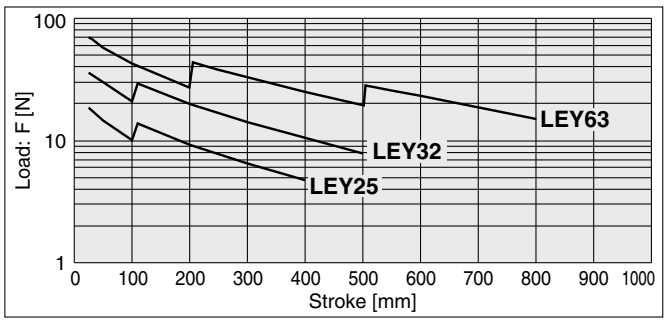

∗ The changes in the graph waveforms are due to the difference in components of different product strokes.

[Stroke] = [Product stroke] + [Distance from the rod end to the center of gravity of the workpiece]

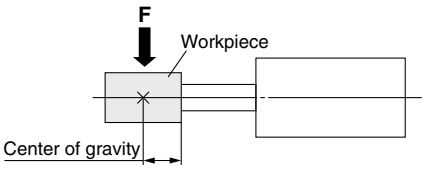

Rod Displacement: δ [mm]

Size \ Stroke	30	50	100	150	200	250	300	350	400	450	500	600	700	800
25	±0.3	±0.4	±0.7	±0.7	±0.9	±1.1	±1.3	±1.5	±1.7	—	—	—	—	—
32	±0.3	±0.4	±0.7	±0.6	±0.8	±1.0	±1.1	±1.3	±1.5	±1.7	±1.8	—	—	—
63	—	±0.5	±0.7	±0.9	±1.2	±1.1	±1.3	±1.5	±1.7	±1.9	±2.1	±1.7	±2.0	±2.2

∗ The values without a load are shown.

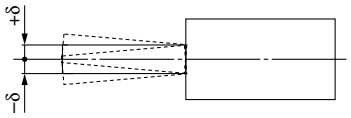

Non-rotating Accuracy of Rod

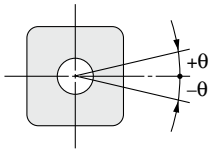

Size	Non-rotating accuracy θ
25	±0.8°
32	±0.7°
63	±0.6°

∗ Avoid using the electric actuator in such a way that rotational torque would be applied to the piston rod.
Failure to do so may result in the deformation of the non-rotating guide, abnormal auto switch responses, play in the internal guide, or an increase in the sliding resistance.

Battery-less Absolute (Step Motor 24 VDC)

Rod Type

LEY Series LEY16, 25, 32, 40

RoHS

* For details, refer to page 1343 and onward.

How to Order

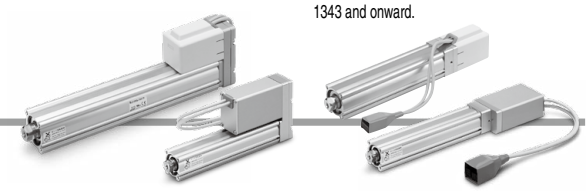

Motor mounting position: Parallel

Motor mounting position: In-line

LEY 25 ☐ E B – 30 C ☐ ☐ – R1 CD17T

❶ ❷ ❸ ❹ ❺ ❻ ❼ ❽ ❾ ❿

For details on controllers, refer to the next page.

❶ Size

16
25
32
40

❷ Motor mounting position/Motor cover direction

Symbol	Motor mounting position	Motor cover direction
Nil	Top side parallel	—
D	In-line	—*1
D1		Left*2
D2		Right*2
D3		Top*2
D4		Bottom*2

❸ Motor type

E	Battery-less absolute (Step motor 24 VDC)

❹ Lead [mm]

Symbol	LEY16	LEY25	LEY32/40
A	10	12	16
B	5	6	8
C	2.5	3	4

❺ Stroke*3 [mm]

Stroke	Note	
	Size	Applicable stroke
30 to 300	16	30, 50, 100, 150, 200, 250, 300
30 to 400	25	30, 50, 100, 150, 200, 250, 300, 350, 400
30 to 500	32/40	30, 50, 100, 150, 200, 250, 300, 350, 400, 450, 500

❻ Motor option*4

C	With motor cover
W	With lock/motor cover

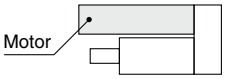

❼ Rod end thread

Nil	Rod end female thread
M	Rod end male thread (1 rod end nut is included.)

❽ Mounting*5

Symbol	Type	Motor mounting position	
		Parallel	In-line
Nil	Ends tapped/ Body bottom tapped*6	●	●
L	Foot	●	—
F	Rod flange*6	●*8	●
G	Head flange*6	●*9	—
D	Double clevis*7	●	—

❾ Actuator cable type/length

Robotic cable [m]

Nil	None	R8	8*10
R1	1.5	RA	10*10
R3	3	RB	15*10
R5	5	RC	20*10

⑩ Controller

Nil	Without controller
C□1□□	With controller

C D 1 7 T

Interface (Communication protocol/Input/Output)

Symbol	Type	Number of axes, Special specification	
		Standard	With STO sub-function
5	Parallel input (NPN)	●	
6	Parallel input (PNP)	●	
E	EtherCAT	●	●
9	EtherNet/IP™	●	●
P	PROFINET	●	●
D	DeviceNet®	●	
L	IO-Link	●	●
M	CC-Link	●	

Mounting

7	Screw mounting
8∗11	DIN rail

Number of axes, Special specification

Symbol	Number of axes	Specification
1	Single axis	Standard
F	Single axis	With STO sub-function

Communication plug connector, I/O cable∗12

Symbol	Type	Applicable interface
Nil	Without accessory	—
S	Straight type communication plug connector	DeviceNet® CC-Link Ver. 1.10
T	T-branch type communication plug connector	
1	I/O cable (1.5 m)	Parallel input (NPN) Parallel input (PNP)
3	I/O cable (3 m)	
5	I/O cable (5 m)	

∗1 Sizes 25, 32, and 40 only
∗2 Size 16 only
∗3 Please contact SMC for non-standard strokes as they are produced as special orders.
∗4 When "With lock/motor cover" is selected for the top side parallel motor type, the motor body will stick out from the end of the body for size 16 with strokes of 50 mm or less and size 40 with strokes of 30 mm or less. Check for interference with workpieces before selecting a model.
∗5 The mounting bracket is shipped together with the product but does not come assembled.
∗6 For the horizontal cantilever mounting of the rod flange, head flange, or ends tapped types, use the actuator within the following stroke range.
· LEY25: 200 or less · LEY32/40: 100 or less
∗7 For the mounting of the double clevis type, use the actuator within the following stroke range.
· LEY16: 100 or less · LEY25: 200 or less · LEY32/40: 200 or less
∗8 The rod flange type is not available for the LEY16 with strokes of 50 mm or less and LEY40 with strokes of 30 mm or less, and motor option "With lock/motor cover."
∗9 The head flange type is not available for the LEY32/40.
∗10 Produced upon receipt of order
∗11 The DIN rail is not included. It must be ordered separately.
∗12 Select "Nil" for anything other than DeviceNet®, CC-Link, or parallel input.
Select "Nil," "S," or "T" for DeviceNet® or CC-Link.
Select "Nil," "1," "3," or "5" for parallel input.

⚠Caution

[CE/UKCA-compliant products]
EMC compliance was tested by combining the electric actuator LEY series and the controller JXC series.
The EMC depends on the configuration of the customer's control panel and the relationship with other electrical equipment and wiring. Therefore, compliance with the EMC directive cannot be certified for SMC components incorporated into the customer's equipment under actual operating conditions. As a result, it is necessary for the customer to verify compliance with the EMC directive for the machinery and equipment as a whole.

[Precautions relating to differences in controller versions]
When the JXC series is to be used in combination with the battery-less absolute encoder, use a controller that is version V3.4 or S3.4 or higher. For details, refer to pages 1077 and 1078.

[UL certification]
The JXC series controllers used in combination with electric actuators are UL certified.

The actuator and controller are sold as a package.
Confirm that the combination of the controller and actuator is correct.

<Check the following before use.>
① Check the actuator label for the model number. This number should match that of the controller.
② Check that the Parallel I/O configuration matches (NPN or PNP).

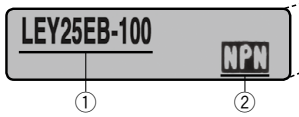

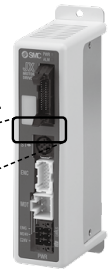

∗ Refer to the Operation Manual for using the products.
Please download it via our website: https://www.smcworld.com

Type	Step data input type	EtherCAT direct input type	EtherCAT direct input type with STO sub-function	EtherNet/IP™ direct input type	EtherNet/IP™ direct input type with STO sub-function	PROFINET direct input type	PROFINET direct input type with STO sub-function	DeviceNet® direct input type	IO-Link direct input type	IO-Link direct input type with STO sub-function	CC-Link direct input type
Series	**JXC51 JXC61**	**JXCE1**	**JXCEF**	**JXC91**	**JXC9F**	**JXCP1**	**JXCPF**	**JXCD1**	**JXCL1**	**JXCLF**	**JXCM1**
Features	Parallel I/O	EtherCAT direct input	EtherCAT direct input with STO sub-function	EtherNet/IP™ direct input	EtherNet/IP™ direct input with STO sub-function	PROFINET direct input	PROFINET direct input with STO sub-function	DeviceNet® direct input	IO-Link direct input	IO-Link direct input with STO sub-function	CC-Link direct input
Compatible motor	Battery-less absolute (Step motor 24 VDC)										
Max. number of step data	64 points										
Power supply voltage	24 VDC										
Reference page	1017	1063									

Specifications

Battery-less Absolute (Step Motor 24 VDC)

Model				LEY16□E			LEY25□E			LEY32□E			LEY40□E		
Actuator specifications	Work load [kg]*1	Horizontal	(3000 [mm/s²])	6	17	30	20	40	60	30	45	60	50	60	80
			(2000 [mm/s²])	10	23	35	30	55	70	40	60	80	60	70	90
		Vertical	(3000 [mm/s²])	2	4	8	8	16	30	11	22	43	13	27	53
	Pushing force [N]*2 *3 *4			14 to 38	27 to 74	51 to 141	63 to 122	126 to 238	232 to 452	80 to 189	156 to 370	296 to 707	132 to 283	266 to 553	562 to 1058
	Speed [mm/s]*4			15 to 500	8 to 250	4 to 125	18 to 500	9 to 250	5 to 125	24 to 500	12 to 300	6 to 150	24 to 500	12 to 300	6 to 150
	Max. acceleration/deceleration [mm/s²]			3000											
	Pushing speed [mm/s]*5			50 or less			35 or less			30 or less			30 or less		
	Positioning repeatability [mm]			±0.02											
	Lost motion [mm]*6			0.1 or less											
	Screw lead [mm]			10	5	2.5	12	6	3	16	8	4	16	8	4
	Impact/Vibration resistance [m/s²]*7			50/20											
	Actuation type			Ball screw + Belt (LEY□)/Ball screw (LEY□D)											
	Guide type			Sliding bushing (Piston rod)											
	Operating temperature range [°C]			5 to 40											
	Operating humidity range [%RH]			90 or less (No condensation)											
	Enclosure			IP40 (Excludes the operation hole for the manual override screw on the motor cover when motor option "C" or "W" is selected for motor type "Nil")											
Electric specifications	Motor size			□28			□42			□56.4			□56.4		
	Motor type			Battery-less absolute (Step motor 24 VDC)											
	Encoder			Battery-less absolute											
	Power supply voltage [V]			24 VDC ±10%											
	Power [W]*8 *10			Max. power 43			Max. power 48			Max. power 104			Max. power 106		
Lock unit specifications	Type*9			Non-magnetizing lock											
	Holding force [N]			20	39	78	78	157	294	108	216	421	127	265	519
	Power [W]*10			2.9			5			5			5		
	Rated voltage [V]			24 VDC ±10%											

*1 Horizontal: The maximum value of the work load. An external guide is necessary to support the load (Friction coefficient of guide: 0.1 or less). The actual work load and transfer speed change according to the condition of the external guide. Also, speed changes according to the work load. Check the "Model Selection" on pages 422 and 423.
Vertical: Speed changes according to the work load. Check the "Model Selection" on pages 421 and 423.
The values shown in ( ) are the acceleration/deceleration.
Set these values to be 3000 [mm/s²] or less.
*2 Pushing force accuracy is ±20% (F.S.).
*3 The pushing force values for LEY16□E are 20% to 65%, for LEY25□E are 30% to 50%, for LEY32□E are 30% to 70%, and for LEY40□E are 35% to 65%.
The pushing force values change according to the duty ratio and pushing speed. Check the "Model Selection" on page 424.
*4 The speed and force may change depending on the cable length, load, and mounting conditions. Furthermore, if the cable length exceeds 5 m, then it will decrease by up to 10% for each 5 m. (At 15 m: Reduced by up to 20%)
*5 The allowable speed for pushing operation. When push conveying a workpiece, operate at the vertical work load or less.
*6 A reference value for correcting errors in reciprocal operation
*7 Impact resistance: No malfunction occurred when the actuator was tested with a drop tester in both an axial direction and a perpendicular direction to the lead screw. (The test was performed with the actuator in the initial state.)
Vibration resistance: No malfunction occurred in a test ranging between 45 to 2000 Hz. The test was performed in both an axial direction and a perpendicular direction to the lead screw. (The test was performed with the actuator in the initial state.)
*8 Indicates the max. power during operation (including the controller). This value can be used for the selection of the power supply.
*9 With lock only
*10 For an actuator with lock, add the power for the lock.

Weight

Weight: Top Side Parallel Motor Type

Series	LEY16E							LEY25E									LEY32E										
Stroke [mm]	30	50	100	150	200	250	300	30	50	100	150	200	250	300	350	400	30	50	100	150	200	250	300	350	400	450	500
Product weight [kg]	0.75	0.79	0.9	1.04	1.15	1.26	1.37	1.21	1.28	1.45	1.71	1.89	2.06	2.24	2.41	2.59	2.13	2.24	2.53	2.81	3.21	3.5	3.78	4.07	4.36	4.64	4.93

Series	LEY40E										
Stroke [mm]	30	50	100	150	200	250	300	350	400	450	500
Product weight [kg]	2.44	2.55	2.84	3.12	3.52	3.81	4.09	4.38	4.67	4.95	5.24

Weight: In-line Motor Type

Series	LEY16DE							LEY25DE									LEY32DE										
Stroke [mm]	30	50	100	150	200	250	300	30	50	100	150	200	250	300	350	400	30	50	100	150	200	250	300	350	400	450	500
Product weight [kg]	0.72	0.76	0.87	1.01	1.12	1.23	1.34	1.2	1.27	1.44	1.7	1.88	2.05	2.23	2.4	2.58	2.12	2.23	2.52	2.8	3.2	3.49	3.77	4.06	4.35	4.63	4.92

Series	LEY40DE										
Stroke [mm]	30	50	100	150	200	250	300	350	400	450	500
Product weight [kg]	2.43	2.54	2.83	3.11	3.51	3.8	4.08	4.37	4.66	4.94	5.24

Additional Weight

[kg]

Size		16	25	32	40
Lock/Motor cover		0.16	0.29	0.57	0.57
Rod end male thread	**Male thread**	0.01	0.03	0.03	0.03
	Nut	0.01	0.02	0.02	0.02
Foot bracket (2 sets including mounting bolt)		0.06	0.08	0.14	0.14
Rod flange (including mounting bolt)		0.13	0.17	0.20	0.20
Head flange (including mounting bolt)					
Double clevis (including pin, retaining ring, and mounting bolt)		0.08	0.16	0.22	0.22

Construction

Top side parallel motor type: LEY 25/32/40 E

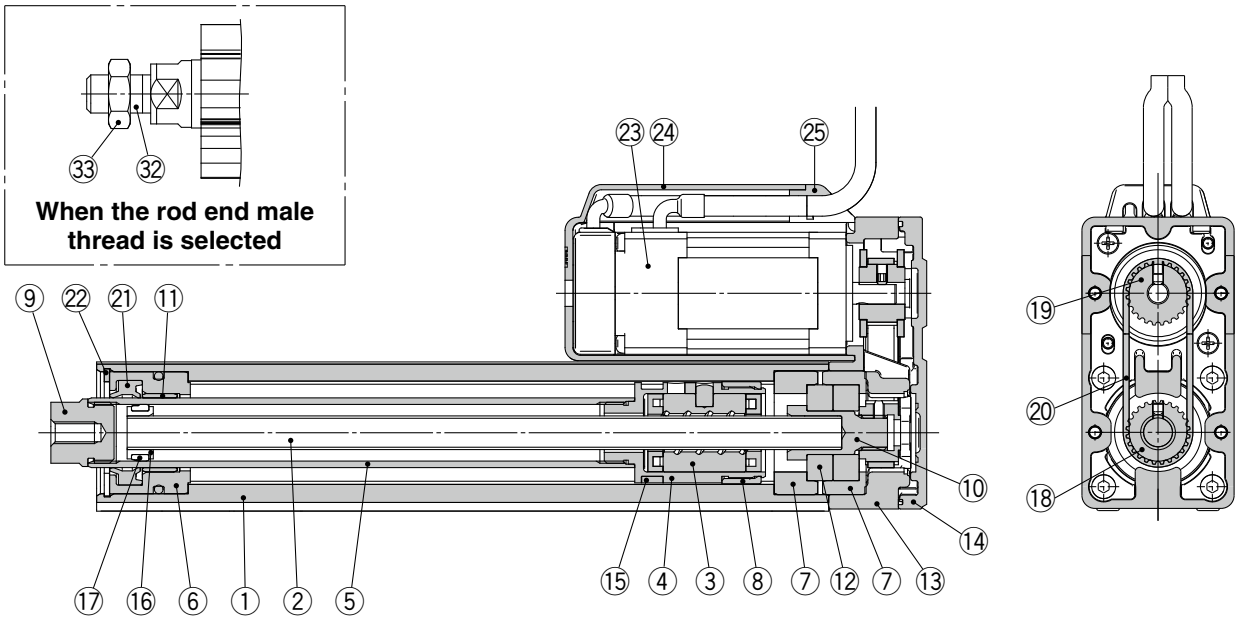

Top side parallel motor type, With lock/motor cover

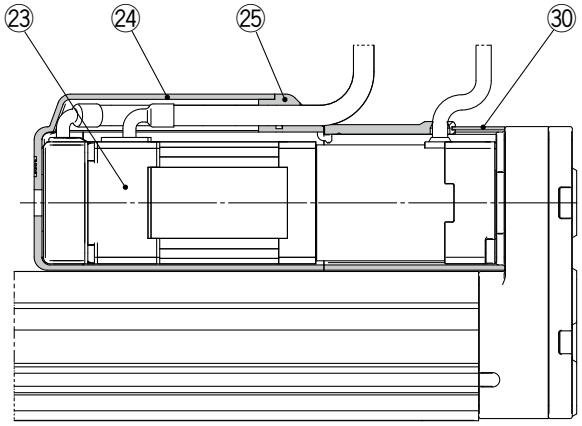

Top side parallel motor type: LEY16E

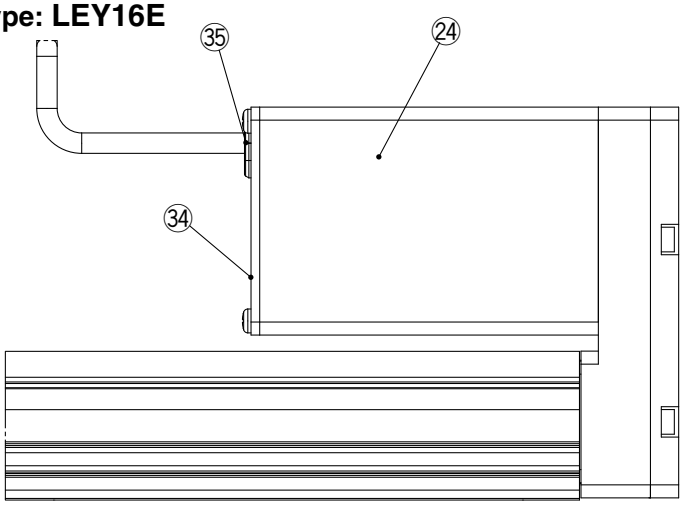

Construction

In-line motor type: LEY32DE 25 40

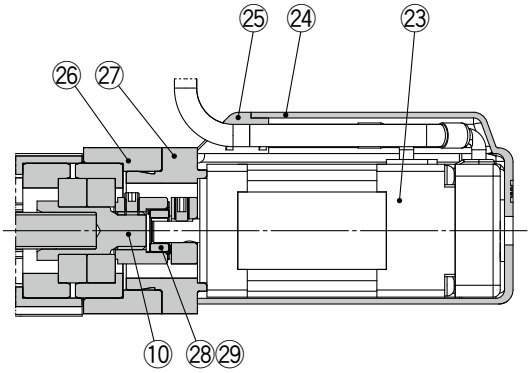

In-line motor type, With lock/motor cover

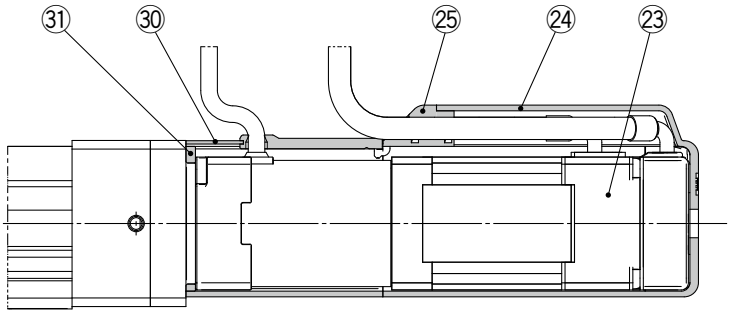

In-line motor type: LEY16DE

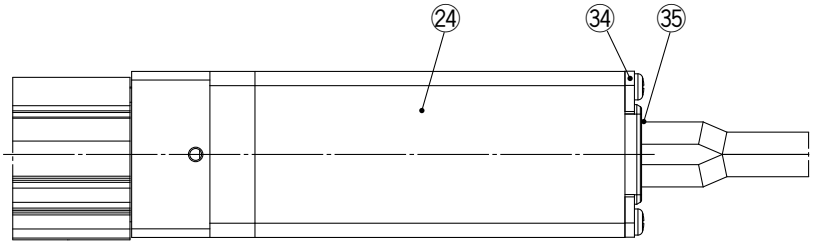

Component Parts

No.	Description	Material	Note
1	**Body**	Aluminum alloy	Anodized
2	**Ball screw shaft**	Alloy steel	
3	**Ball screw nut**	Synthetic resin/Alloy steel	
4	**Piston**	Aluminum alloy	
5	**Piston rod**	Stainless steel	Hard chrome plating
6	**Rod cover**	Aluminum alloy	
7	**Bearing holder**	Aluminum alloy	
8	**Rotation stopper**	Synthetic resin	
9	**Socket**	Free cutting carbon steel	Nickel plating
10	**Connected shaft**	Free cutting carbon steel	Nickel plating
11	**Bushing**	Bearing alloy	
12	**Bearing**	—	
13	**Return box**	Aluminum die-cast	Coating
14	**Return plate**	Aluminum die-cast	Coating
15	**Magnet**	—	
16	**Wear ring holder**	Stainless steel	Stroke 101 mm or more
17	**Wear ring**	Synthetic resin	Stroke 101 mm or more
18	**Screw shaft pulley**	Aluminum alloy	
19	**Motor pulley**	Aluminum alloy	
20	**Belt**	—	
21	**Seal**	NBR	
22	**Retaining ring**	Steel for spring	Phosphate coating
23	**Motor**	—	
24	**Motor cover**	Aluminum alloy	Anodized/LEY16 only
		Synthetic resin	
25	**Grommet**	Synthetic resin	Only “With motor cover”

No.	Description	Material	Note
26	**Motor block**	Aluminum alloy	Anodized
27	**Motor adapter**	Aluminum alloy	Anodized/LEY16, 25 only
28	**Hub**	Aluminum alloy	
29	**Spider**	NBR	
30	**Motor cover with lock**	Aluminum alloy	Only “With lock/motor cover”/LEY25, 32, 40
31	**Cover support**	Aluminum alloy	Only “With lock/motor cover”/LEY25, 32, 40
32	**Socket (Male thread)**	Free cutting carbon steel	Nickel plating
33	**Nut**	Alloy steel	Zinc chromating
34	**End cover**	Aluminum alloy	Anodized/LEY16 only
35	**Rubber bushing**	NBR	LEY16 only

Replacement Parts (Top side parallel only)/Belt

No.	Size	Order no.
20	**16**	LE-D-2-7
	25	LE-D-2-2
	32, 40	LE-D-2-3

Replacement Parts/Grease Pack

Applied portion	Order no.
Piston rod	GR-S-010 (10 g) GR-S-020 (20 g)

Dimensions: Top Side Parallel Motor

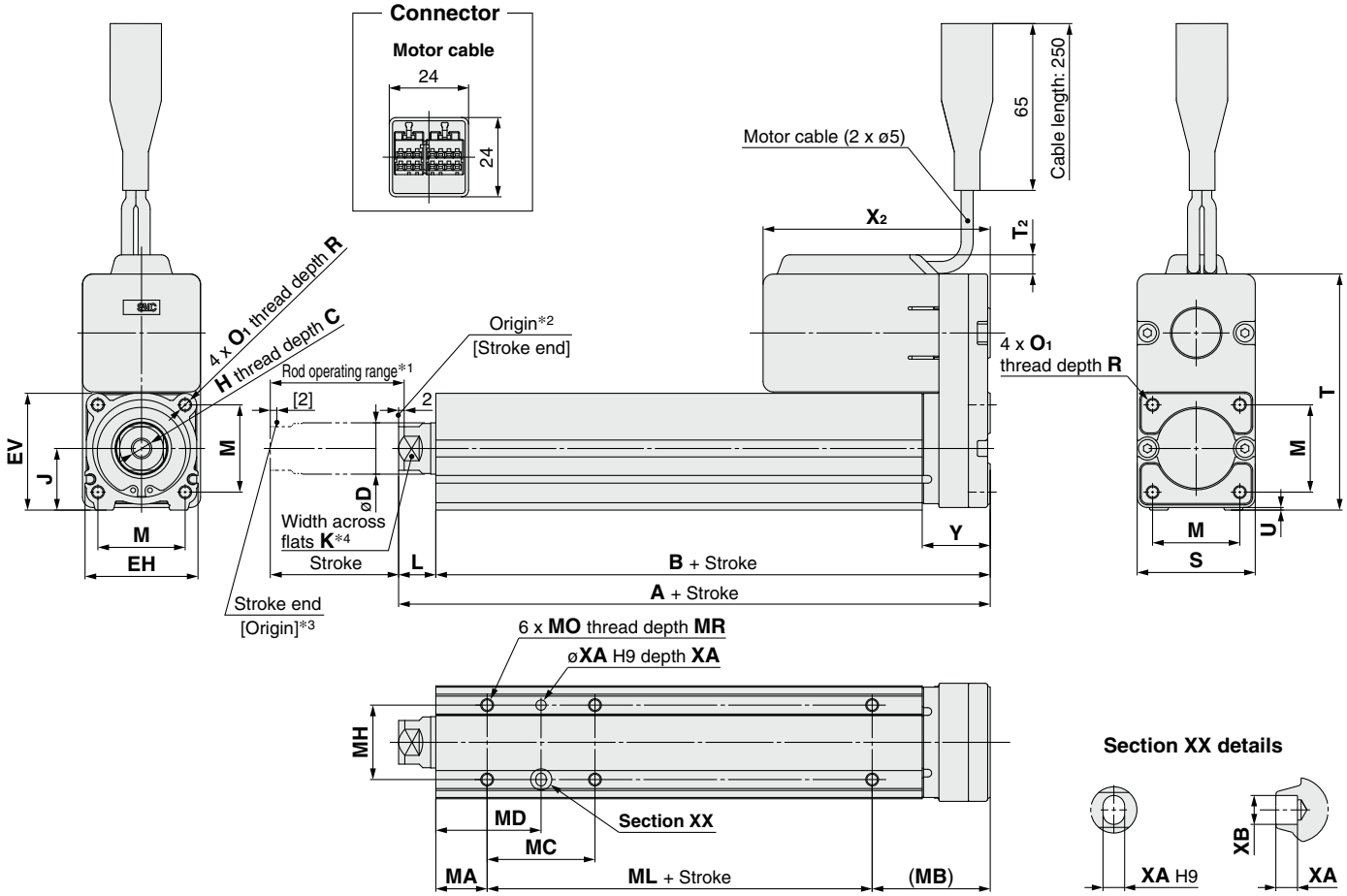

*1 This is the range within which the rod can move when it returns to origin. Make sure that workpieces mounted on the rod do not interfere with other workpieces or the facilities around the rod.
*2 Position after returning to origin
*3 [ ] for when the direction of return to origin has changed
*4 The direction of rod end width across flats (□K) differs depending on the products.

[mm]

Size	Stroke range [mm]	A	B	C	D	EH	EV	H	J	K	L	M	O1	R	S	T	T2	U	V	X2 Without lock	X2 With lock	Y
16	30 to 100	101	90.5	10	16	34	34.3	M5 x 0.8	18	14	10.5	25.5	M4 x 0.7	7	35	90.5	—	0.5	28	100.5	145.5	22.5
	105 to 300	121	110.5																			
25	30 to 100	130.5	116	13	20	44	45.5	M8 x 1.25	24	17	14.5	34	M5 x 0.8	8	46	92	7.5	1	42	88.5	129	26.5
	105 to 400	155.5	141																			
32	30 to 100	148.5	130	13	25	51	56.5	M8 x 1.25	31	22	18.5	40	M6 x 1.0	10	60	118	8.5	1	56.4	98.5	141.5	34
	105 to 500	178.5	160																			
40	30 to 100	148.5	130	13	25	51	56.5	M8 x 1.25	31	22	18.5	40	M6 x 1.0	10	60	118	8.5	1	56.4	120.5	163.5	34
	105 to 500	178.5	160																			

Body Bottom Tapped

[mm]

Size	Stroke range [mm]	MA	MB	MC	MD	MH	ML	MO	MR	XA	XB
16	30 to 35	15	35.5	17	23.5	23	40	M4 x 0.7	5.5	3	4
	40 to 100			32	31						
	105 to 300			62	46		60				
25	30 to 35	20	46	24	32	29	50	M5 x 0.8	6.5	4	5
	40 to 100			42	41						
	105 to 120										
	125 to 200			59	49.5		75				
	205 to 400			76	58						
32 40	30 to 35	25	55	22	36	30	50	M6 x 1	8.5	5	6
	40 to 100			36	43						
	105 to 120										
	125 to 200			53	51.5		80				
	205 to 500			70	60						

Dimensions: Top Side Parallel Motor

With lock/motor cover: LEY$\begin{matrix}25\\32\\40\end{matrix}$$\begin{matrix}A\\E\\C\end{matrix}$B-□W

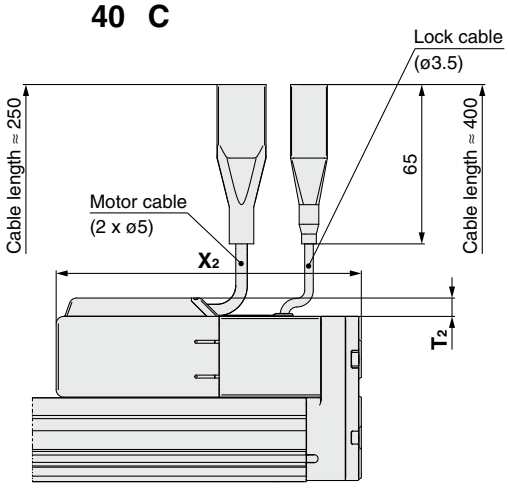

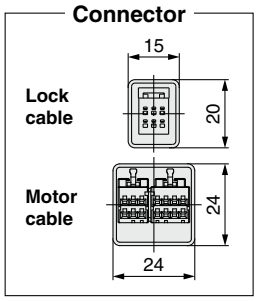

With motor cover: LEY16E$\begin{matrix}A\\B\\C\end{matrix}$-□C

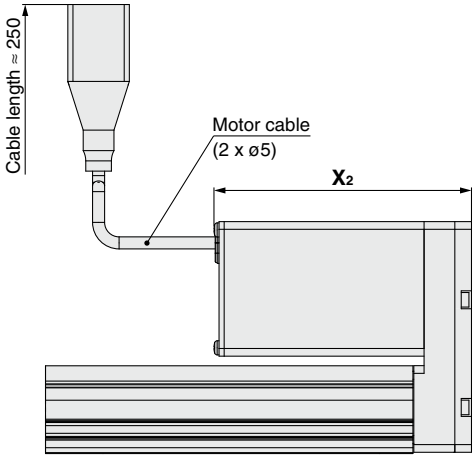

With lock/motor cover: LEY16E$\begin{matrix}A\\B\\C\end{matrix}$-□W

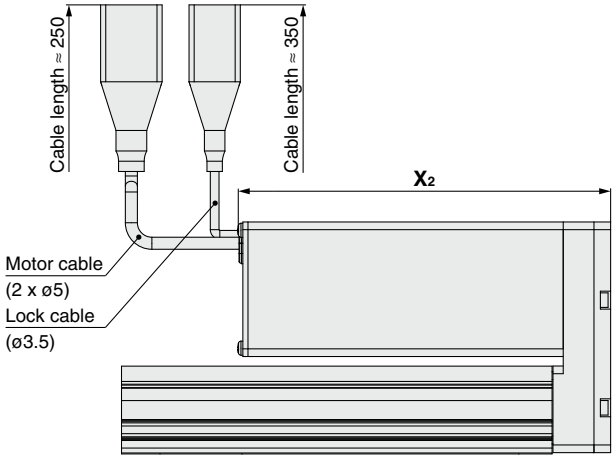

Dimensions: In-line Motor

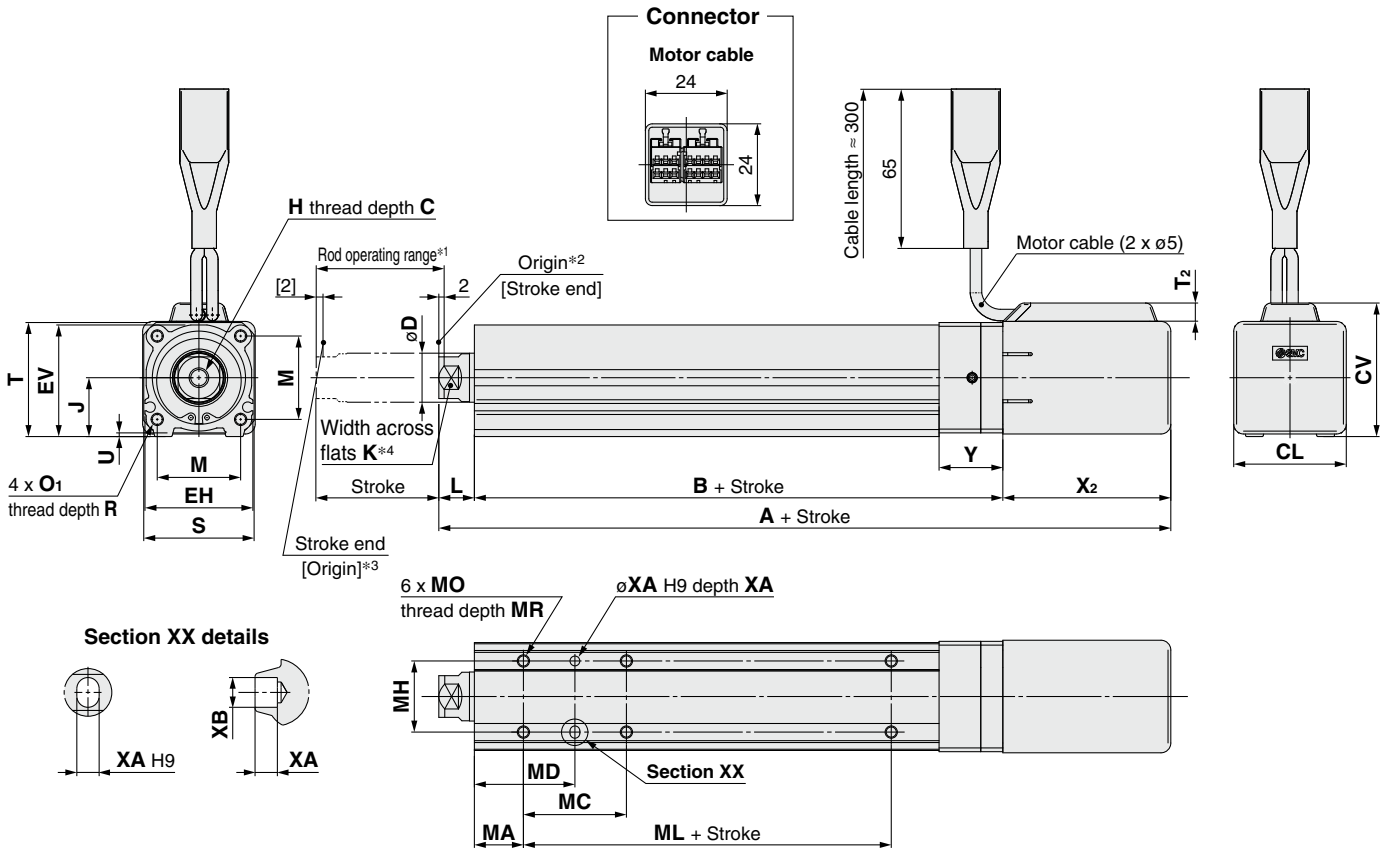

*1 This is the range within which the rod can move when it returns to origin. Make sure that workpieces mounted on the rod do not interfere with other workpieces or the facilities around the rod.
*2 Position after returning to origin
*3 [ ] for when the direction of return to origin has changed
*4 The direction of rod end width across flats (□K) differs depending on the products.
*5 Refer to page 456 for motor cover dimensions of the LEY16.

[mm]

Size	Stroke range [mm]	A		B	C	CL	CV	D	EH	EV	H	J	K	L	M	O_1	R	S	T	T_2	U	X_2		Y
		Without lock	With lock																			Without lock	With lock	
16	30 to 100	186.5	231.5	94	10	—	*6 —	16	34	34.3	M5 x 0.8	18	14	10.5	25.5	M4 x 0.7	7	*5 35	35.5	—	0.5	82	127	26
	105 to 300	206.5	251.5	114																				
25	30 to 100	198.5	239	115.5	13	46	54.5	20	44	45.5	M8 x 1.25	24	17	14.5	34	M5 x 0.8	8	45	46.5	7.5	1.5	68.5	109	26
	105 to 400	223.5	264	140.5																				
32	30 to 100	220	263	128	13	60	69.5	25	51	56.5	M8 x 1.25	31	22	18.5	40	M6 x 1	10	60	61	8.5	1	73.5	116.5	32
	105 to 500	250	293	158																				
40	30 to 100	242	285	128	13	60	69.5	25	51	56.5	M8 x 1.25	31	22	18.5	40	M6 x 1	10	60	61	8.5	1	95.5	138.5	32
	105 to 500	272	315	158																				

*6 Refer to page 456.

Body Bottom Tapped

[mm]

Size	Stroke range [mm]	MA	MC	MD	MH	ML	MO	MR	XA	XB
16	30 to 35	15	17	23.5	23	40	M4 x 0.7	5.5	3	4
	40 to 100		32	31						
	105 to 300		62	46		60				
25	30 to 35	20	24	32	29	50	M5 x 0.8	6.5	4	5
	40 to 100		42	41						
	105 to 120					75				
	125 to 200		59	49.5						
	205 to 400		76	58						
32 40	30 to 35	25	22	36	30	50	M6 x 1	8.5	5	6
	40 to 100		36	43						
	105 to 120					80				
	125 to 200		53	51.5						
	205 to 500		70	60						

Dimensions: In-line Motor

With lock/motor cover: LEY$\begin{matrix}25\\32\\40\end{matrix}D\begin{matrix}A\\E\\C\end{matrix}$B-□W

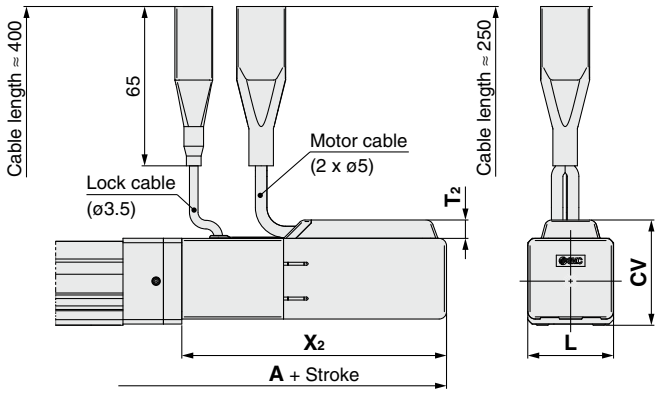

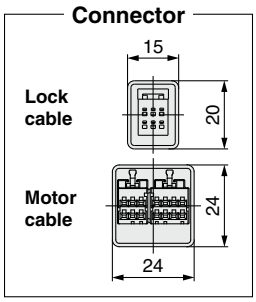

[mm]

Size	Stroke range	T_2	L	CV
16	Up to 100	7.5	35	—*1
	105 to 300			
25	Up to 100	7.5	46	54.4
	105 to 400			
32	Up to 100	7.5	60	68.5
	105 to 500			
40	Up to 100	7.5	60	68.5
	105 to 500			

*1 Refer to the table below.

With motor cover: LEY16D□E$\begin{matrix}A\\B\\C\end{matrix}$-□C

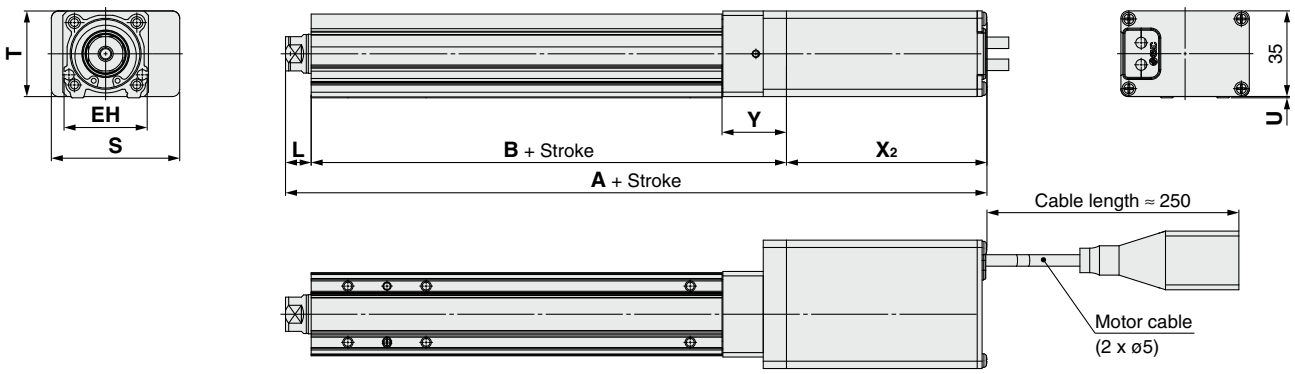

With lock/motor cover: LEY16D□E$\begin{matrix}A\\B\\C\end{matrix}$-□W

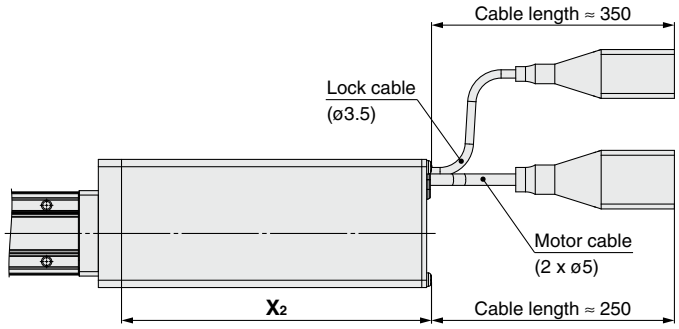

Motor Cover Direction

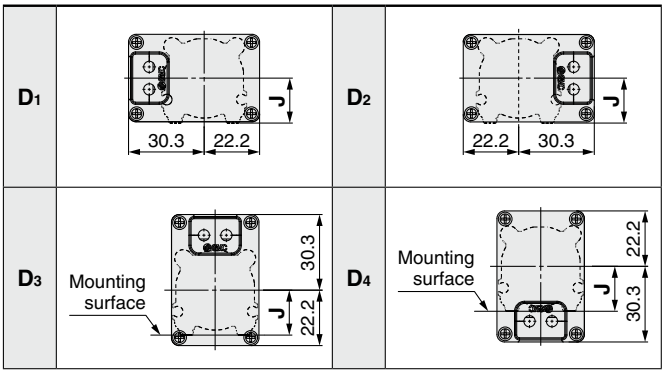

CV Dimensions (Size 16)

Motor cover direction	CV
D_1	35.5
D_2	35.5
D_3	48.3
D_4	40.2

Dimensions

End male thread: LEY$^{16}_{25}_{32}_{40}$□E$^{A}_{B}_{C}$-□□M

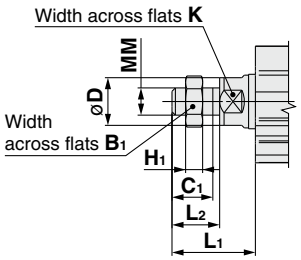

[mm]

Size	B_1	C_1	øD	H_1	K	L_1	L_2	MM
16	13	12	16	5	14	24.5	14	M8 x 1.25
25	22	20.5	20	8	17	38	23.5	M14 x 1.5
32, 40	22	20.5	25	8	22	42.0	23.5	M14 x 1.5

∗ The L_1 measurement is when the unit is in the original position. At this position, 2 mm at the end.

∗ Refer to pages 499 and 500 for details on the rod end nut and mounting bracket.
∗ Refer to the "Handling" precautions on pages 574 to 577 when mounting end brackets such as knuckle joint or workpieces.

Foot: LEY$^{16}_{25}_{32}_{40}$E$^{A}_{B}_{C}$-□□□L

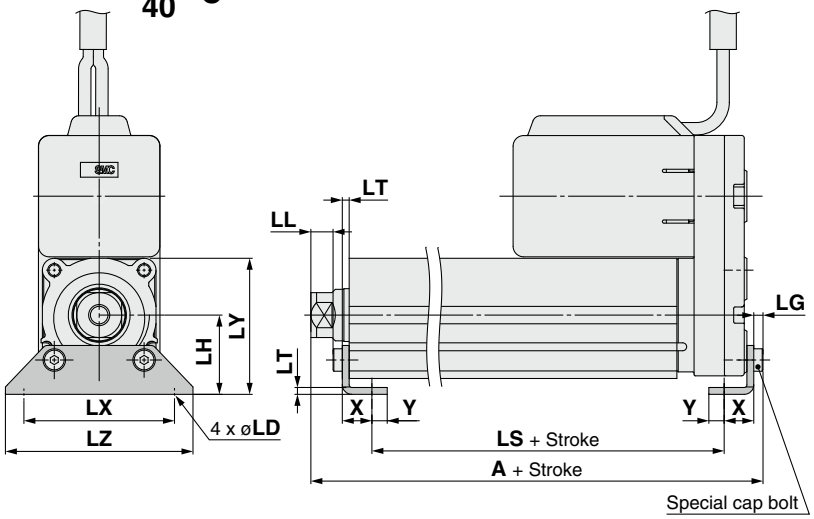

Outward mounting

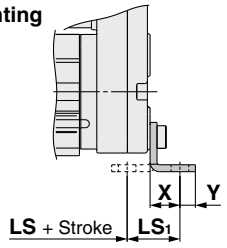

Included parts
· Foot bracket
· Body mounting bolt

Foot

[mm]

Size	Stroke range [mm]	A	LS	LS_1	LL	LD	LG	LH	LT	LX	LY	LZ	X	Y
16	30 to 100	106.1	76.7	16.1	5.4	6.6	2.8	24	2.3	48	40.3	62	9.2	5.8
	105 to 300	126.1	96.7											
25	30 to 100	136.6	98.8	19.8	8.4	6.6	3.5	30	2.6	57	51.5	71	11.2	5.8
	105 to 400	161.6	123.8											
32	30 to 100	155.7	114	19.2	11.3	6.6	4	36	3.2	76	61.5	90	11.2	7
40	105 to 500	185.7	144											

Material: Carbon steel (Chromating)
∗ The A measurement is when the unit is in the original position. At this position, 2 mm at the end.

Dimensions

Rod flange: LEY16□EB$^{A}_{C}$-□□□F

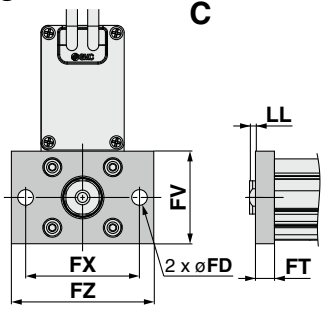

Head flange: LEY16EB$^{A}_{C}$-□□□G

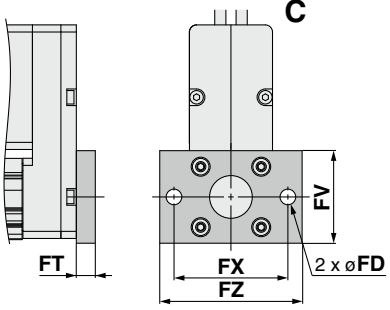

Rod flange: LEY$^{25}_{32}_{40}$□EB$^{A}_{C}$-□□□F

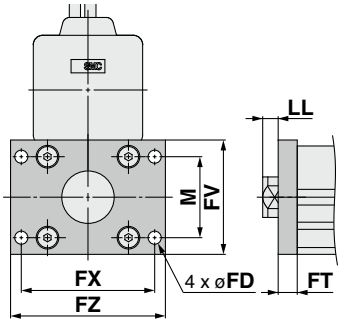

Head flange: LEY25EB$^{A}_{C}$-□□□G

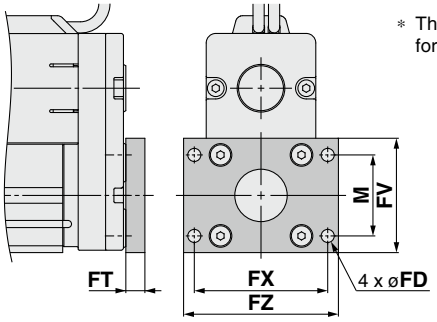

∗ The head flange type is not available for the LEY32/40.

Included parts
- Flange
- Body mounting bolt

Rod/Head Flange [mm]

Size	FD	FT	FV	FX	FZ	LL	M
16	6.6	8	39	48	60	2.5	—
25	5.5	8	48	56	65	6.5	34
32, 40	5.5	8	54	62	72	10.5	40

Material: Carbon steel (Nickel plating)

Double clevis: LEY16EB$^{A}_{C}$-□□□D

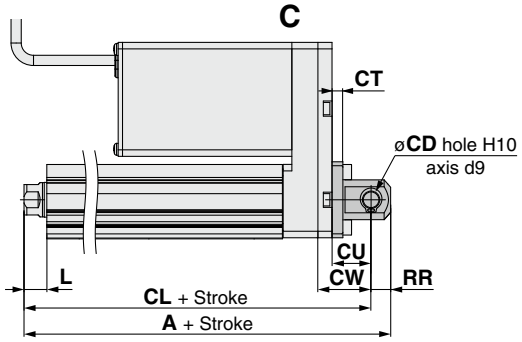

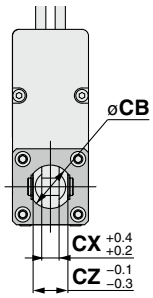

Included parts
- Double clevis
- Body mounting bolt
- Clevis pin
- Retaining ring

∗ Refer to pages 499 and 500 for details on the rod end nut and mounting bracket.

Double clevis: LEY$^{25}_{32}_{40}$EB$^{A}_{C}$-□□□D

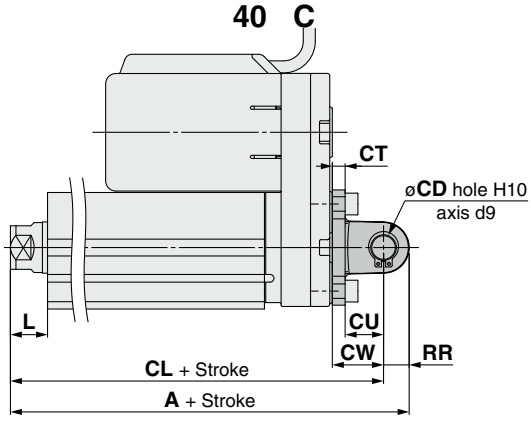

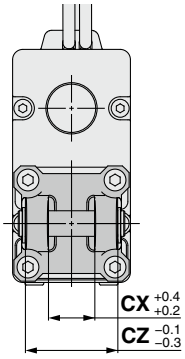

Double Clevis [mm]

Size	Stroke range [mm]	A	CL	CB	CD	CT
16	30 to 100	128	119	20	8	5
25	30 to 100	160.5	150.5	—	10	5
	105 to 200	185.5	175.5			
32 **40**	30 to 100	180.5	170.5	—	10	6
	105 to 200	210.5	200.5			

Size	Stroke range [mm]	CU	CW	CX	CZ	L	RR
16	30 to 100	12	18	8	16	10.5	9
25	30 to 100	14	20	18	36	14.5	10
	105 to 200						
32 **40**	30 to 100	14	22	18	36	18.5	10
	105 to 200						

Material: Cast iron (Coating)

∗ The A and CL measurements are when the unit is in the original position. At this position, 2 mm at the end.

Incremental (Step Motor 24 VDC) Incremental (Servo Motor 24 VDC)

Rod Type

LEY Series LEY16, 25, 32, 40

∗ For details, refer to page 1343 and onward.

RoHS

Dust-tight/Water-jet-proof ▶p. 903, 917 Secondary Battery Compatible ▶p. 983

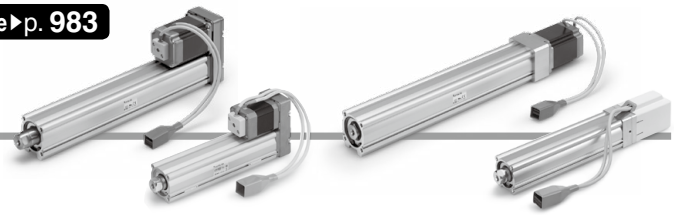

Motor mounting position: Parallel Motor mounting position: In-line

How to Order

LEY 16 ❑ ❑ B – 30 ❑ ❑ ❑ – S1

❶ ❷ ❸ ❹ ❺ ❻ ❼ ❽ ❾

JXC□ Series CD17T

LEC□ Series AN ❑ ❑

❿ ⓫ ⓬

For details on controllers, refer to page 461.

❶ Size

16
25
32
40

❷ Motor mounting position

Nil	Top side parallel
R	Right side parallel
L	Left side parallel
D	In-line

❸ Motor type

Symbol	Type	Applicable size			Compatible controllers/drivers
		LEY16	LEY25	LEY32/40	
Nil	Step motor (Servo/24 VDC)	●	●	●	JXC51 JXCEF JXC61 JXC9F JXCE1 JXCPF JXC91 JXCLF JXCP1 JXCD1 LECP1 JXCL1 LECPA JXCM1
A	Servo motor (24 VDC)	●	●	—	LECA6

❹ Lead [mm]

Symbol	LEY16	LEY25	LEY32/40
A	10	12	16
B	5	6	8
C	2.5	3	4

❺ Stroke [mm]

30	30
to	to
500	500

∗ For details, refer to the applicable stroke table below.

❻ Motor option∗2

Nil	Without option
C	With motor cover
B	With lock
W	With lock/motor cover

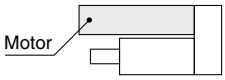

❼ Rod end thread

Nil	Rod end female thread
M	Rod end male thread (1 rod end nut is included.)

❽ Mounting∗3

Symbol	Type	Motor mounting position	
		Parallel	In-line
Nil	Ends tapped/Body bottom tapped∗4	●	●
L	Foot bracket	●	—
F	Rod flange∗4	●∗6	●
G	Head flange∗4	●∗7	—
D	Double clevis∗5	●	—

❾ Actuator cable type/length∗9

Standard cable [m]

Nil	None
S1	1.5∗11
S3	3∗11
S5	5∗11

Robotic cable [m]

R1	1.5	RA	10∗8
R3	3	RB	15∗8
R5	5	RC	20∗8
R8	8∗8		

Applicable Stroke Table∗1

●: Standard

Model \ Stroke [mm]	30	50	100	150	200	250	300	350	400	450	500	Manufacturable stroke range
LEY16	●	●	●	●	●	●	●	—	—	—	—	10 to 300
LEY25	●	●	●	●	●	●	●	●	●	—	—	15 to 400
LEY32/40	●	●	●	●	●	●	●	●	●	●	●	20 to 500

For auto switches, refer to pages 502 to 505.

JXC□ Series (For details, refer to page 461.)

⑩ Controller

Nil	Without controller
C□1□□	With controller

C D 1 7 T

Interface (Communication protocol/Input/Output)

Symbol	Type	Number of axes, Special specification: Standard	With STO sub-function
5	Parallel input (NPN)	●	
6	Parallel input (PNP)	●	
E	EtherCAT	●	●
9	EtherNet/IP™	●	●
P	PROFINET	●	●
D	DeviceNet®	●	
L	IO-Link	●	●
M	CC-Link	●	

Mounting

7	Screw mounting
8*15	DIN rail

Number of axes, Special specification

Symbol	Number of axes	Specification
1	Single axis	Standard
F	Single axis	With STO sub-function

Communication plug connector, I/O cable*16

Symbol	Type	Applicable interface
Nil	Without accessory	—
S	Straight type communication plug connector	DeviceNet® CC-Link Ver. 1.10
T	T-branch type communication plug connector	
1	I/O cable (1.5 m)	Parallel input (NPN) Parallel input (PNP)
3	I/O cable (3 m)	
5	I/O cable (5 m)	

LEC□ Series (For details, refer to page 461.)

AN 1 □
⑩ ⑪ ⑫

⑩ Controller/Driver type*10

Nil	Without controller/driver	
6N	LECA6 (Step data input type)	NPN
6P		PNP
1N	LECP1*11 (Programless type)	NPN
1P		PNP
AN	LECPA*11 *12 (Pulse input type)	NPN
AP		PNP

⑪ I/O cable length*13

Nil	Without cable (Without communication plug connector)
1	1.5 m
3	3 m*14
5	5 m*14

⑫ Controller/Driver mounting

Nil	Screw mounting
D	DIN rail*15

*1 Please contact SMC for non-standard strokes as they are produced as special orders.
*2 When "With lock" or "With lock/motor cover" is selected for the top/right/left side parallel motor types, the motor body will stick out from the end of the body for size 16/40 with strokes of 30 mm or less. Check for interference with workpieces before selecting a model.
*3 The mounting bracket is shipped together with the product but does not come assembled.
*4 For the horizontal cantilever mounting of the rod flange, head flange, or ends tapped types, use the actuator within the following stroke range.
·LEY25: 200 mm or less ·LEY32/40: 100 mm or less
*5 For the mounting of the double clevis type, use the actuator within the following stroke range.
·LEY16: 100 mm or less ·LEY25: 200 mm or less ·LEY32/40: 200 mm or less
*6 The rod flange type is not available for the LEY16/40 with a 30 mm stroke and motor option "With lock," "With lock/motor cover."
*7 The head flange type is not available for the LEY32/40.
*8 Produced upon receipt of order (Robotic cable only)
*9 The standard cable should only be used on fixed parts.
For use on moving parts, select the robotic cable.
Refer to the **Web Catalog** if only the actuator cable is required.
*10 For details on controllers/drivers and compatible motors, refer to the compatible controllers/drivers on the next page.
*11 Only available for the motor type "Step motor"
*12 When pulse signals are open collector, order the current limiting resistor (LEC-PA-R-□) on page 1062 separately.
*13 When "Without controller/driver" is selected for controller/driver types, I/O cable cannot be selected. If an I/O cable is required, refer to the cable for the LECA6 (**Web Catalog**), LECP1 (**Web Catalog**), or LECPA (**Web Catalog**).
*14 When "Pulse input type" is selected for controller/driver types, pulse input usable only with differential. Only 1.5 m cables usable with open collector
*15 The DIN rail is not included. It must be ordered separately.
*16 Select "Nil" for anything other than DeviceNet®, CC-Link, or parallel input.
Select "Nil," "S," or "T" for DeviceNet® or CC-Link.
Select "Nil," "1," "3," or "5" for parallel input.

⚠Caution

[CE/UKCA-compliant products]

① EMC compliance was tested by combining the electric actuator LEY series and the controller LEC/JXC series.
The EMC depends on the configuration of the customer's control panel and the relationship with other electrical equipment and wiring. Therefore, compliance with the EMC directive cannot be certified for SMC components incorporated into the customer's equipment under actual operating conditions. As a result, it is necessary for the customer to verify compliance with the EMC directive for the machinery and equipment as a whole.

② For the incremental (servo motor 24 VDC) specification, EMC compliance was tested by installing a noise filter set (LEC-NFA). Refer to page 1037 for the noise filter set. Refer to the LECA series Operation Manual for installation.

[UL-compliant products (For the LEC series)]

When compliance with UL is required, the electric actuator and controller/driver should be used with a UL1310 Class 2 power supply.

The actuator and controller/driver are sold as a package.

Confirm that the combination of the controller/driver and actuator is correct.

<Check the following before use.>

① Check the actuator label for the model number. This number should match that of the controller/driver.

② Check that the Parallel I/O configuration matches (NPN or PNP).

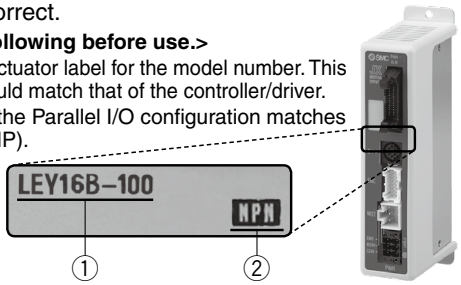

* Refer to the "Operation Manual" for using the products. Please download it via our website: https://www.smcworld.com

Compatible Controllers/Drivers

Type	Step data input type	Step data input type	Programless type	Pulse input type
Series	**JXC51 JXC61**	**LECA6**	**LECP1**	**LECPA**
Features	Parallel I/O	Parallel I/O	Capable of setting up operation (step data) without using a PC or teaching box	Operation by pulse signals
Compatible motor	Step motor (Servo/24 VDC)	Servo motor (24 VDC)	Step motor (Servo/24 VDC)	
Max. number of step data	64 points		14 points	—
Power supply voltage	24 VDC			
Reference page	1017	1031	1042	1057

Type	EtherCAT direct input type	EtherCAT direct input type with STO sub-function	EtherNet/IP™ direct input type	EtherNet/IP™ direct input type with STO sub-function	PROFINET direct input type	PROFINET direct input type with STO sub-function	DeviceNet® direct input type	IO-Link direct input type	IO-Link direct input type with STO sub-function	CC-Link direct input type
Series	**JXCE1**	**JXCEF**	**JXC91**	**JXC9F**	**JXCP1**	**JXCPF**	**JXCD1**	**JXCL1**	**JXCLF**	**JXCM1**
Features	EtherCAT direct input	EtherCAT direct input with STO sub-function	EtherNet/IP™ direct input	EtherNet/IP™ direct input with STO sub-function	PROFINET direct input	PROFINET direct input with STO sub-function	DeviceNet® direct input	IO-Link direct input	IO-Link direct input with STO sub-function	CC-Link direct input
Compatible motor	Step motor (Servo/24 VDC)									
Max. number of step data	64 points									
Power supply voltage	24 VDC									
Reference page	1063									

Specifications

Step Motor (Servo/24 VDC)

Model				LEY16			LEY25			LEY32			LEY40		
Actuator specifications	Work load [kg]*1	Horizontal (JXC□1, JXC□F, LECP1)	(3000 [mm/s²])	6	17	30	20	40	60	30	45	60	50	60	80
			(2000 [mm/s²])	10	23	35	30	55	70	40	60	80	60	70	90
		Horizontal (LECPA, JXC□2/3)	(3000 [mm/s²])	4	11	20	12	30	30	20	40	40	30	60	60
			(2000 [mm/s²])	6	17	30	18	50	50	30	60	60	—	—	—
		Vertical	(3000 [mm/s²])	2	4	8	8	16	30	11	22	43	13	27	53
	Pushing force [N]*2 *3 *4			14 to 38	27 to 74	51 to 141	63 to 122	126 to 238	232 to 452	80 to 189	156 to 370	296 to 707	132 to 283	266 to 553	562 to 1058
	Speed [mm/s]*4	JXC□1/LECP1		15 to 500	8 to 250	4 to 125	18 to 500	9 to 250	5 to 125	24 to 500	12 to 300	6 to 150	24 to 500	12 to 350	6 to 175
		LECPA/JXC□2/3									12 to 250	6 to 125	24 to 300	12 to 150	6 to 75
	Max. acceleration/deceleration [mm/s²]			3000											
	Pushing speed [mm/s]*5			50 or less			35 or less			30 or less			30 or less		
	Positioning repeatability [mm]			±0.02											
	Lost motion [mm]*6			0.1 or less											
	Screw lead [mm]			10	5	2.5	12	6	3	16	8	4	16	8	4
	Impact/Vibration resistance [m/s²]*7			50/20											
	Actuation type			Ball screw + Belt (LEY□)/Ball screw (LEY□D)											
	Guide type			Sliding bushing (Piston rod)											
	Operating temperature range [°C]			5 to 40											
	Operating humidity range [%RH]			90 or less (No condensation)											
	Enclosure			IP40 (Excludes the operation hole for the manual override screw on the motor cover when motor option "C" or "W" is selected for motor type "Nil")											
Electric specifications	Motor size			□28			□42			□56.4			□56.4		
	Motor type			Step motor (Servo/24 VDC)											
	Encoder			Incremental											
	Power supply voltage [V]			24 VDC ±10%											
	Power [W]*8 *10			Max. power 43			Max. power 48			Max. power 104			Max. power 106		
Lock unit specifications	Type*9			Non-magnetizing lock											
	Holding force [N]			20	39	78	78	157	294	108	216	421	127	265	519
	Power [W]*10			2.9			5			5			5		
	Rated voltage [V]			24 VDC ±10%											

*1 Horizontal: The max. value of the work load. An external guide is necessary to support the load (Friction coefficient of guide: 0.1 or less). The actual work load and transfer speed change according to the condition of the external guide. Also, speed changes according to the work load. Check the "Model Selection" on pages 429 and 430.
Vertical: Speed changes according to the work load. Check the "Model Selection" on pages 429 and 430.
The values shown in ( ) are the acceleration/deceleration.
Set these values to be 3000 [mm/s²] or less.

*2 Pushing force accuracy is ±20% (F.S.).

*3 The pushing force values for LEY16□ are 35% to 85%, for LEY25□ are 35% to 65%, for LEY32□ are 35% to 85%, and for LEY40□ are 35% to 65%.
The pushing force values change according to the duty ratio and pushing speed. Check the "Model Selection" on page 432.

*4 The speed and force may change depending on the cable length, load, and mounting conditions. Furthermore, if the cable length exceeds 5 m, then it will decrease by up to 10% for each 5 m. (At 15 m: Reduced by up to 20%)

*5 The allowable speed for pushing operation. When push conveying a workpiece, operate at the vertical work load or less.

*6 A reference value for correcting errors in reciprocal operation

*7 Impact resistance: No malfunction occurred when the actuator was tested with a drop tester in both an axial direction and a perpendicular direction to the lead screw. (The test was performed with the actuator in the initial state.)
Vibration resistance: No malfunction occurred in a test ranging between 45 to 2000 Hz. The test was performed in both an axial direction and a perpendicular direction to the lead screw. (The test was performed with the actuator in the initial state.)

*8 Indicates the max. power during operation (including the controller). This value can be used for the selection of the power supply.

*9 With lock only

*10 For an actuator with lock, add the power for the lock.

Specifications

Servo Motor (24 VDC)

	Model		LEY16□A			LEY25□A		
Actuator specifications	Work load [kg]*1	Horizontal (3000 [mm/s²])	3	6	12	7	15	30
		Vertical (3000 [mm/s²])	2	4	8	3	6	12
	Pushing force [N]*2 *3		16 to 30	30 to 58	57 to 111	18 to 35	37 to 72	66 to 130
	Speed [mm/s]		1 to 500	1 to 250	1 to 125	2 to 500	1 to 250	1 to 125
	Max. acceleration/deceleration [mm/s²]		3000					
	Pushing speed [mm/s]*4		50 or less			35 or less		
	Positioning repeatability [mm]		±0.02					
	Lost motion [mm]*5		0.1 or less					
	Screw lead [mm]		10	5	2.5	12	6	3
	Impact/Vibration resistance [m/s²]*6		50/20					
	Actuation type		Ball screw + Belt (LEY□)/Ball screw (LEY□D)					
	Guide type		Sliding bushing (Piston rod)					
	Operating temperature range [°C]		5 to 40					
	Operating humidity range [%RH]		90 or less (No condensation)					
	Enclosure		IP40 (Excludes the operation hole for the manual override screw on the motor cover when motor option "C" or "W" is selected for motor type "Nil")					
Electric specifications	Motor size		□28			□42		
	Motor output [W]		30			36		
	Motor type		Servo motor (24 VDC)					
	Encoder		Incremental					
	Power supply voltage [V]		24 VDC ±10%					
	Power [W]*7 *9		Max. power 59			Max. power 96		
Lock unit specifications	Type*8		Non-magnetizing lock					
	Holding force [N]		20	39	78	78	157	294
	Power [W]*9		2.9			5		
	Rated voltage [V]		24 VDC ±10%					

*1 Horizontal: The max. value of the work load. An external guide is necessary to support the load (Friction coefficient of guide: 0.1 or less). The actual work load and transfer speed change according to the condition of the external guide.
Vertical: Check the "Model Selection" on page 431 for details.
The values shown in ( ) are the acceleration/deceleration.
Set these values to be 3000 [mm/s²] or less.
*2 Pushing force accuracy is ±20% (F.S.).
*3 The thrust setting values for LEY16A□ are 60% to 95% and for LEY25A□ are 70% to 95%. The pushing force values change according to the duty ratio and pushing speed. Check the "Model Selection" on page 432.
*4 The allowable speed for pushing operation. When push conveying a workpiece, operate at the vertical work load or less.
*5 A reference value for correcting errors in reciprocal operation
*6 Impact resistance: No malfunction occurred when the actuator was tested with a drop tester in both an axial direction and a perpendicular direction to the lead screw. (The test was performed with the actuator in the initial state.)
Vibration resistance: No malfunction occurred in a test ranging between 45 to 2000 Hz. The test was performed in both an axial direction and a perpendicular direction to the lead screw. (The test was performed with the actuator in the initial state.)
*7 Indicates the max. power during operation (including the controller). This value can be used for the selection of the power supply.
*8 With lock only
*9 For an actuator with lock, add the power for the lock.

Weight

Weight: Top/Right/Left Side Parallel Motor Type

Series		LEY16							LEY25									LEY32										
Stroke [mm]		30	50	100	150	200	250	300	30	50	100	150	200	250	300	350	400	30	50	100	150	200	250	300	350	400	450	500
Product weight [kg]	Step motor	0.58	0.62	0.73	0.87	0.98	1.09	1.20	1.18	1.25	1.42	1.68	1.86	2.03	2.21	2.38	2.56	2.09	2.20	2.49	2.77	3.17	3.46	3.74	4.03	4.32	4.60	4.89
	Servo motor	0.58	0.62	0.73	0.87	0.98	1.09	1.20	1.14	1.21	1.38	1.64	1.82	1.99	2.17	2.34	2.52	—	—	—	—	—	—	—	—	—	—	—

Series		LEY40										
Stroke [mm]		30	50	100	150	200	250	300	350	400	450	500
Product weight [kg]	Step motor	2.39	2.50	2.79	3.07	3.47	3.76	4.04	4.33	4.62	4.90	5.19
	Servo motor	—	—	—	—	—	—	—	—	—	—	—

Weight: In-line Motor Type

Series		LEY16D							LEY25D									LEY32D										
Stroke [mm]		30	50	100	150	200	250	300	30	50	100	150	200	250	300	350	400	30	50	100	150	200	250	300	350	400	450	500
Product weight [kg]	Step motor	0.58	0.62	0.73	0.87	0.98	1.09	1.20	1.17	1.24	1.41	1.67	1.85	2.02	2.20	2.37	2.55	2.08	2.19	2.48	2.76	3.16	3.45	3.73	4.02	4.31	4.59	4.88
	Servo motor	0.58	0.62	0.73	0.87	0.98	1.09	1.20	1.13	1.20	1.37	1.63	1.81	1.98	2.16	2.33	2.51	—	—	—	—	—	—	—	—	—	—	—

Series		LEY40D										
Stroke [mm]		30	50	100	150	200	250	300	350	400	450	500
Product weight [kg]	Step motor	2.38	2.49	2.78	3.06	3.46	3.75	4.03	4.32	4.61	4.89	5.18
	Servo motor	—	—	—	—	—	—	—	—	—	—	—

Additional Weight

[kg]

Size		16	25	32	40
Lock		0.12	0.26	0.53	0.53
Motor cover		0.02	0.03	0.04	0.05
Lock/Motor cover		0.16	0.32	0.61	0.62
Rod end male thread	Male thread	0.01	0.03	0.03	0.03
	Nut	0.01	0.02	0.02	0.02
Foot bracket (2 sets including mounting bolt)		0.06	0.08	0.14	0.14
Rod flange (including mounting bolt)		0.13	0.17	0.20	0.20
Head flange (including mounting bolt)					
Double clevis (including pin, retaining ring, and mounting bolt)		0.08	0.16	0.22	0.22

Construction

Top side parallel motor type: LEY 16 / 25 / 32 / 40

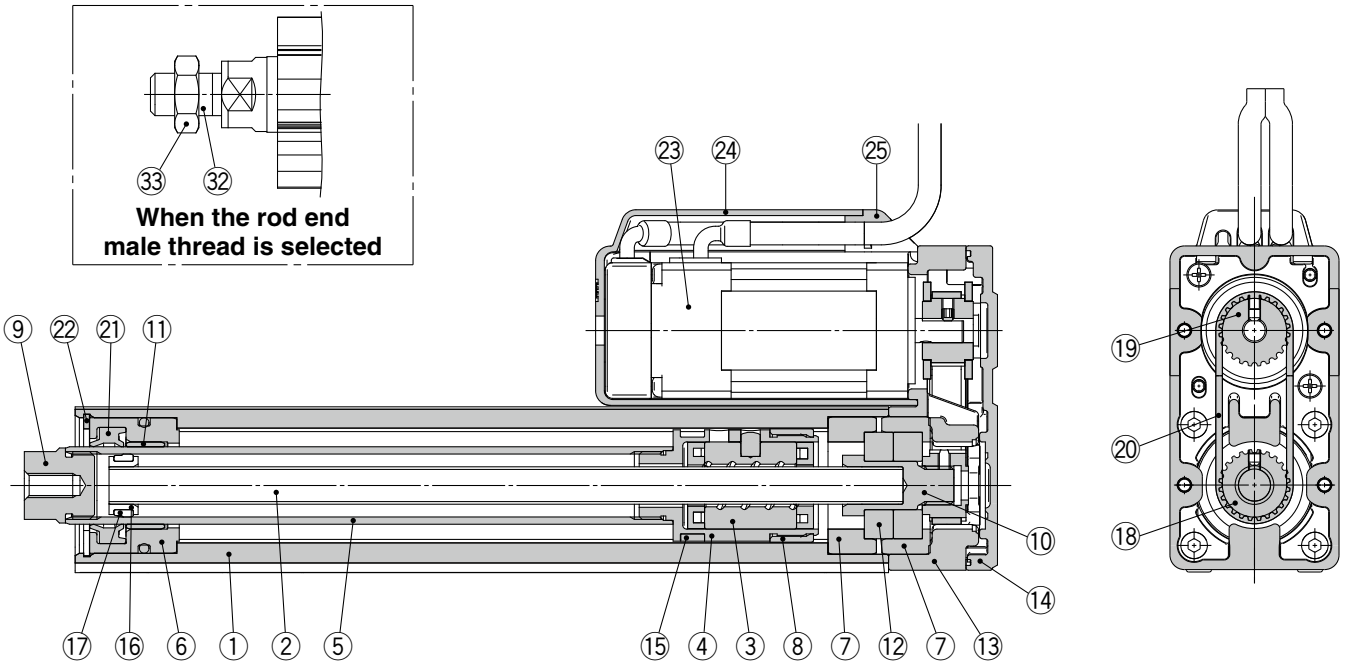

Top/Right/Left side parallel motor type
With lock/motor cover

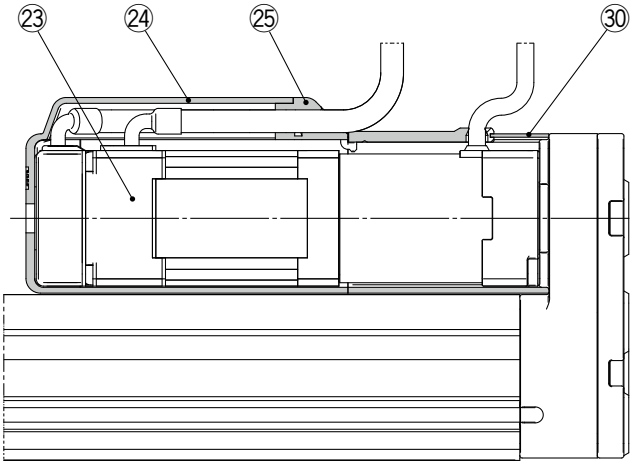

Construction

In-line motor type: LEY 16/25/32/40 D

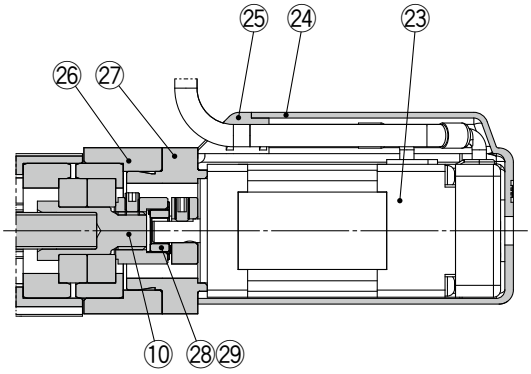

In-line motor type: With lock/motor cover

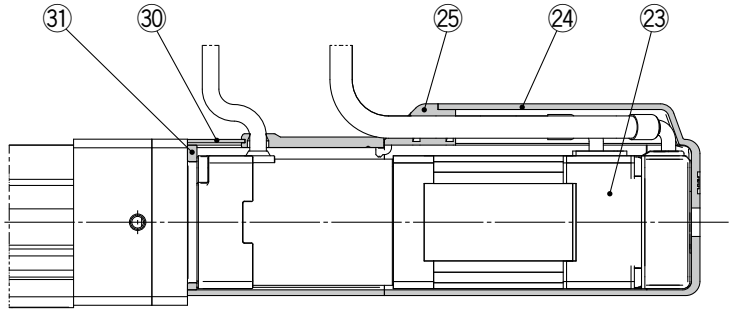

Component Parts

No.	Description	Material	Note
1	**Body**	Aluminum alloy	Anodized
2	**Ball screw shaft**	Alloy steel	
3	**Ball screw nut**	Synthetic resin/Alloy steel	
4	**Piston**	Aluminum alloy	
5	**Piston rod**	Stainless steel	Hard chrome plating
6	**Rod cover**	Aluminum alloy	
7	**Bearing holder**	Aluminum alloy	
8	**Rotation stopper**	Synthetic resin	
9	**Socket**	Free cutting carbon steel	Nickel plating
10	**Connected shaft**	Free cutting carbon steel	Nickel plating [Sizes 32 and 40 only]
11	**Bushing**	Bearing alloy	
12	**Bearing**	—	
13	**Return box**	Aluminum die-cast	Coating
14	**Return plate**	Aluminum die-cast	Coating
15	**Magnet**	—	
16	**Wear ring holder**	Stainless steel	Stroke 101 mm or more
17	**Wear ring**	Synthetic resin	Stroke 101 mm or more
18	**Screw shaft pulley**	Aluminum alloy	
19	**Motor pulley**	Aluminum alloy	
20	**Belt**	—	
21	**Seal**	NBR	
22	**Retaining ring**	Steel for spring	Phosphate coating
23	**Motor**	—	

No.	Description	Material	Note
24	**Motor cover**	Synthetic resin	Only "With motor cover"
25	**Grommet**	Synthetic resin	Only "With motor cover"
26	**Motor block**	Aluminum alloy	Anodized
27	**Motor adapter**	Aluminum alloy	Anodized/LEY16, 25 only
28	**Hub**	Aluminum alloy	
29	**Spider**	NBR	
30	**Motor cover with lock**	Aluminum alloy	Only "With lock/motor cover"
31	**Cover support**	Aluminum alloy	Only "With lock/motor cover"
32	**Socket (Male thread)**	Free cutting carbon steel	Nickel plating
33	**Nut**	Alloy steel	Zinc chromating

Replacement Parts (Top/Right/Left side parallel only)/Belt

No.	Size	Order no.
20	**16**	LE-D-2-1
	25	LE-D-2-2
	32, 40	LE-D-2-3

Replacement Parts/Grease Pack

Applied portion	Order no.
Piston rod	GR-S-010 (10 g) GR-S-020 (20 g)

Dimensions: Top/Right/Left Side Parallel Motor

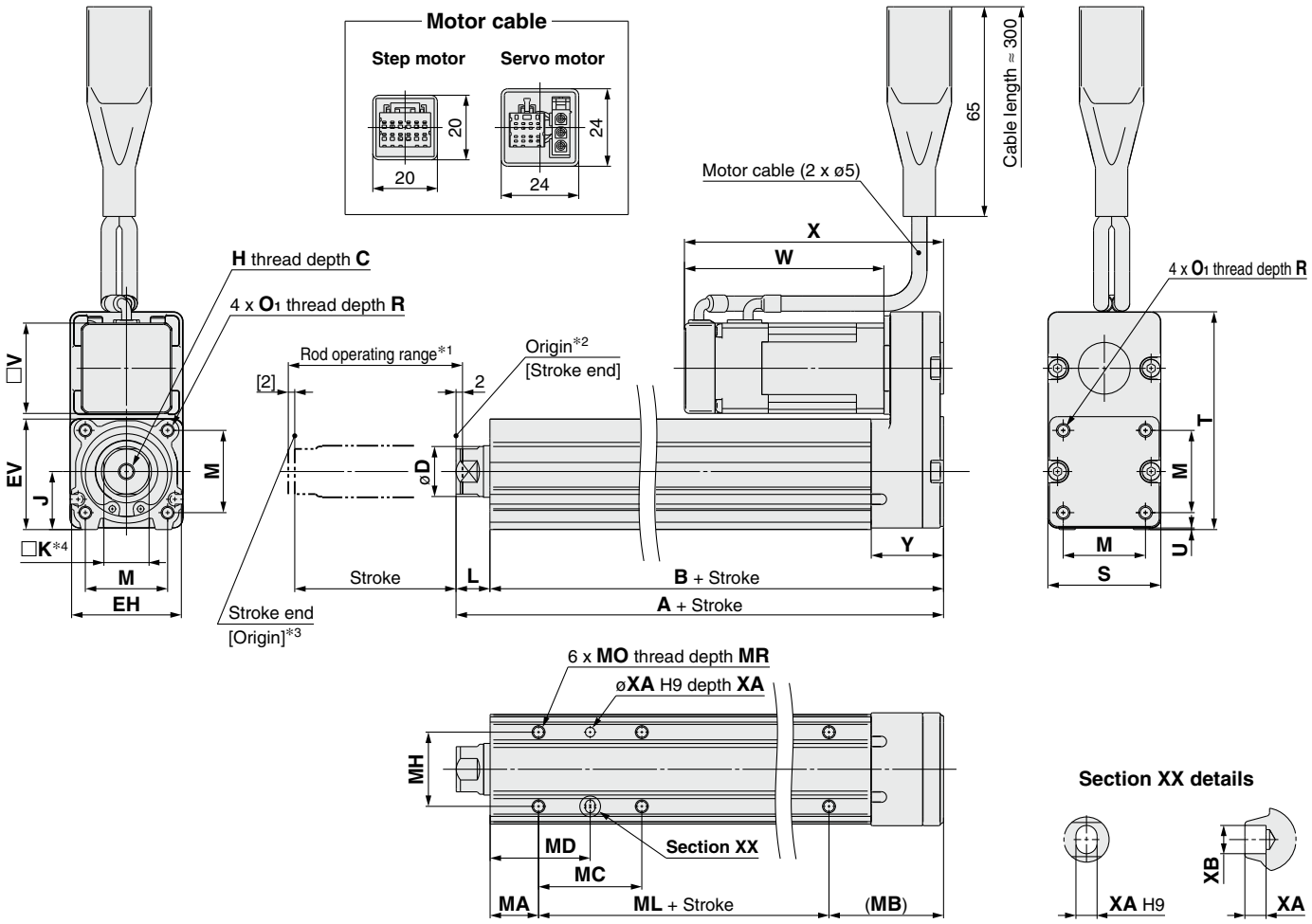

*1 This is the range within which the rod can move when it returns to origin. Make sure that workpieces mounted on the rod do not interfere with other workpieces or the facilities around the rod.
*2 Position after returning to origin
*3 [ ] for when the direction of return to origin has changed
*4 The direction of rod end width across flats (□K) differs depending on the products.

[mm]

Size	Stroke range [mm]	A	B	C	D	EH	EV	H	J	K	L	M	O1	R	S	T	U	V	Step motor W	Step motor X	Servo motor W	Servo motor X	Y
16	30 to 100	101	90.5	10	16	34	34.3	M5 x 0.8	18	14	10.5	25.5	M4 x 0.7	7	35	67.5	0.5	28	61.8	80.3	62.5	81	22.5
	105 to 300	121	110.5																				
25	30 to 100	130.5	116	13	20	44	45.5	M8 x 1.25	24	17	14.5	34	M5 x 0.8	8	46	92	1	42	63.4	85.4	59.6	81.6	26.5
	105 to 400	155.5	141																				
32	30 to 100	148.5	130	13	25	51	56.5	M8 x 1.25	31	22	18.5	40	M6 x 1.0	10	60	118	1	56.4	68.4	95.4	—	—	34
	105 to 500	178.5	160																				
40	30 to 100	148.5	130	13	25	51	56.5	M8 x 1.25	31	22	18.5	40	M6 x 1.0	10	60	118	1	56.4	90.4	117.4	—	—	34
	105 to 500	178.5	160																				

Body Bottom Tapped

[mm]

Size	Stroke range [mm]	MA	MB	MC	MD	MH	ML	MO	MR	XA	XB
16	30 to 35	15	35.5	17	23.5	23	40	M4 x 0.7	5.5	3	4
	40 to 100			32	31						
	105 to 300			62	46		60				
25	30 to 35	20	46	24	32	29	50	M5 x 0.8	6.5	4	5
	40 to 100			42	41						
	105 to 120										
	125 to 200			59	49.5		75				
	205 to 400			76	58						
32 40	30 to 35	25	55	22	36	30	50	M6 x 1	8.5	5	6
	40 to 100			36	43						
	105 to 120										
	125 to 200			53	51.5		80				
	205 to 500			70	60						

Dimensions: Top/Right/Left Side Parallel Motor

Left side parallel motor type: LEY 16/25/32/40 L

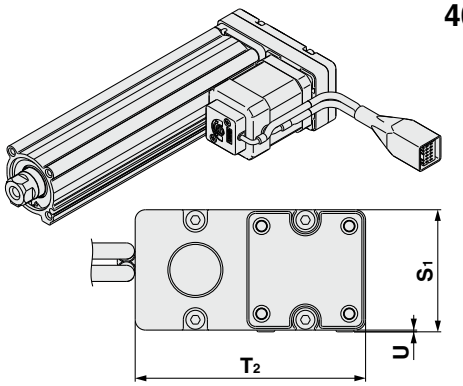

Right side parallel motor type: LEY 16/25/32/40 R

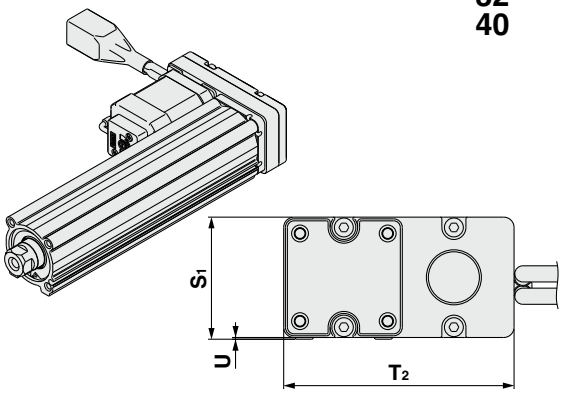

[mm]

Size	S_1	T_2	U
16	35.5	67	0.5
25	47	91	1
32, 40	61	117	1

∗ When the motor is mounted on the left or right side in parallel, the groove for auto switch on the side to which the motor is mounted is hidden.

With motor cover: LEY 16/25/32/40 □□ A/B/C -□C

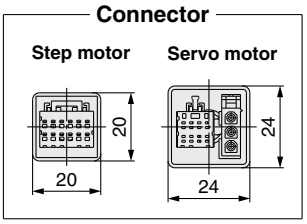

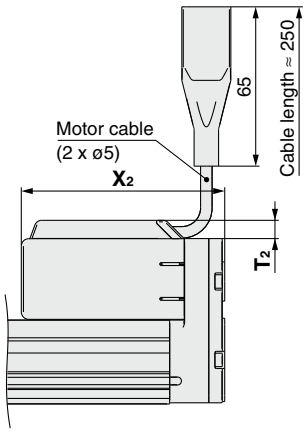

[mm]

Size	T_2	X_2
16	7.5	83
25	7.5	88.5
32	7.5	98.5
40	7.5	120.5

Motor cover material: Synthetic resin

With lock: LEY 16/25/32/40 □□ A/B/C -□B

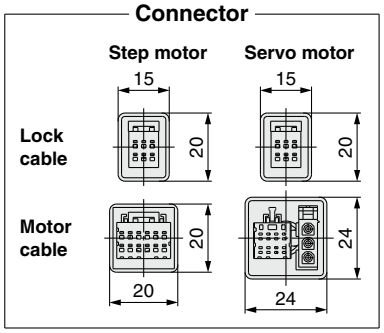

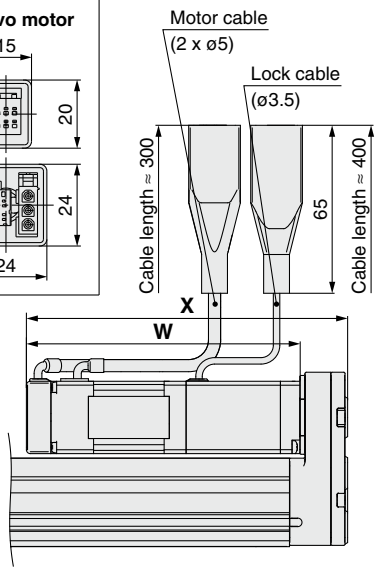

[mm]

Size	Step motor		Servo motor	
	W	X	W	X
16	103.3	121.8	104.0	122.5
25	103.9	125.9	100.1	122.1
32	111.4	138.4	—	—
40	133.4	160.4	—	—

With lock/motor cover: LEY 16/25/32/40 □□ A/B/C -□W

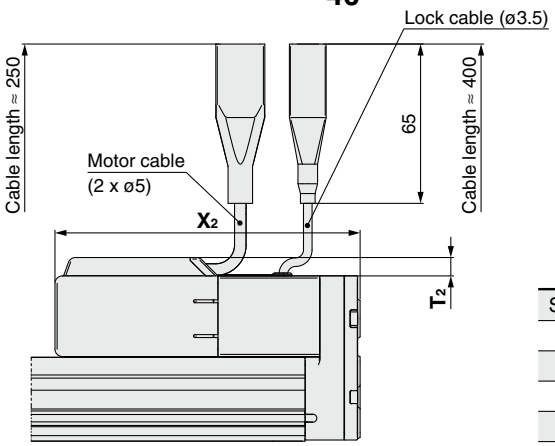

[mm]

Size	T_2	X_2
16	7.5	124.5
25	7.5	129
32	7.5	141.5
40	7.5	163.5

Dimensions: In-line Motor

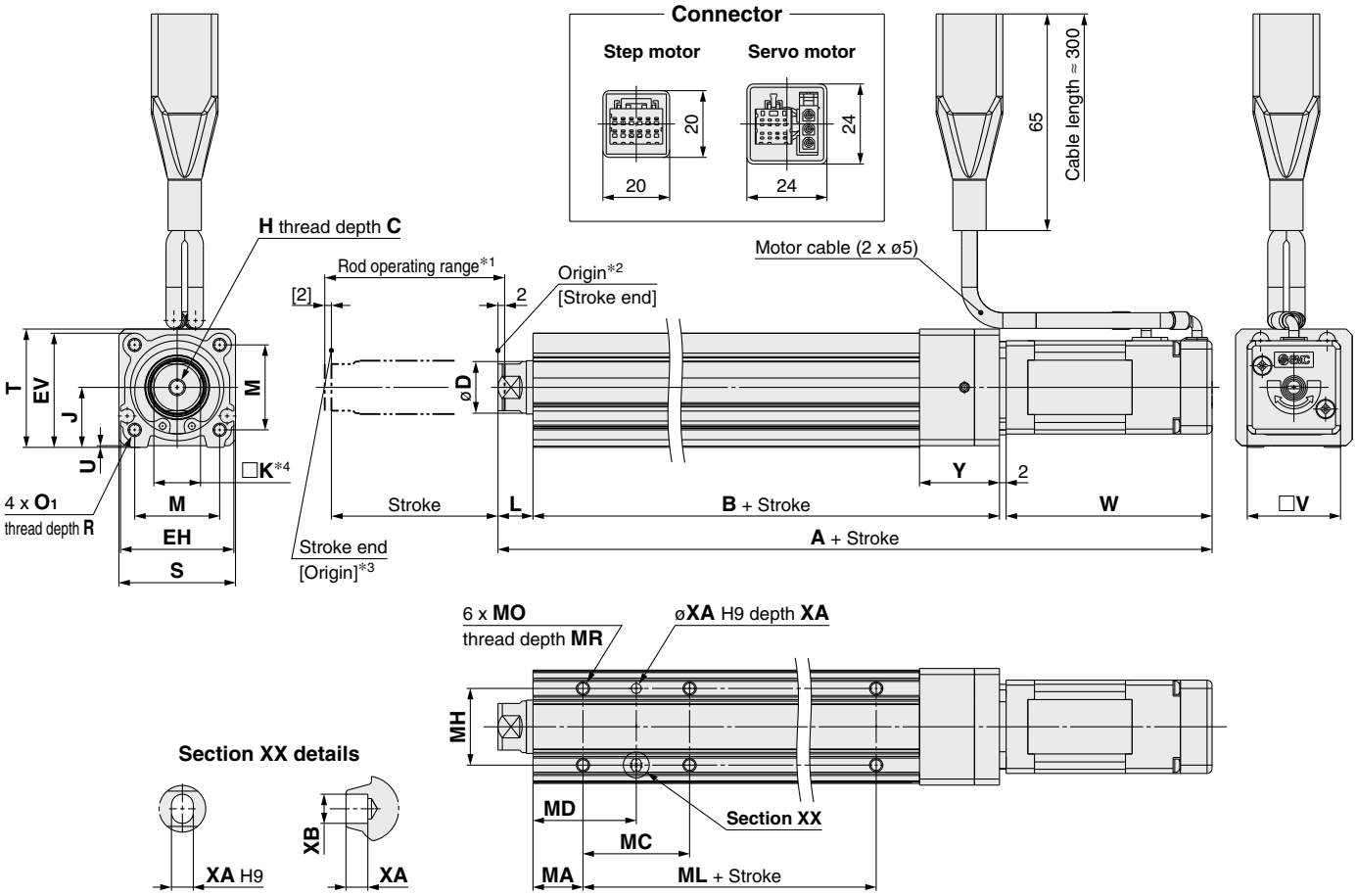

*1 This is the range within which the rod can move when it returns to origin. Make sure that workpieces mounted on the rod do not interfere with other workpieces or the facilities around the rod.
*2 Position after returning to origin
*3 [ ] for when the direction of return to origin has changed
*4 The direction of rod end width across flats (□K) differs depending on the products.

[mm]

Size	Stroke range [mm]	Step motor	Servo motor	B	C	D	EH	EV	H	J	K	L	M	O1	R	S	T	U	V	Step motor	Servo motor	Y
		A																		W		
16	30 to 100	166.3	167	92	10	16	34	34.3	M5 x 0.8	18	14	10.5	25.5	M4 x 0.7	7	35	35.5	0.5	28	61.8	62.5	24
	105 to 300	186.3	187	112																		
25	30 to 100	195.4	191.6	115.5	13	20	44	45.5	M8 x 1.25	24	17	14.5	34	M5 x 0.8	8	45	46.5	1.5	42	63.4	59.6	26
	105 to 400	220.4	216.6	140.5																		
32	30 to 100	216.9	—	128	13	25	51	56.5	M8 x 1.25	31	22	18.5	40	M6 x 1	10	60	61	1	56.4	68.4	—	32
	105 to 500	246.9	—	158																		
40	30 to 100	238.9	—	128	13	25	51	56.5	M8 x 1.25	31	22	18.5	40	M6 x 1	10	60	61	1	56.4	90.4	—	32
	105 to 500	268.9	—	158																		

Body Bottom Tapped

[mm]

Size	Stroke range [mm]	MA	MC	MD	MH	ML	MO	MR	XA	XB
16	30 to 35	15	17	23.5	23	40	M4 x 0.7	5.5	3	4
	40 to 100		32	31						
	105 to 300		62	46		60				
25	30 to 35	20	24	32	29	50	M5 x 0.8	6.5	4	5
	40 to 100		42	41						
	105 to 120					75				
	125 to 200		59	49.5						
	205 to 400		76	58						
32 40	30 to 35	25	22	36	30	50	M6 x 1	8.5	5	6
	40 to 100		36	43						
	105 to 120					80				
	125 to 200		53	51.5						
	205 to 500		70	60						

Dimensions: In-line Motor

With motor cover: LEY16/25/32/40 D□ A/B/C -□C

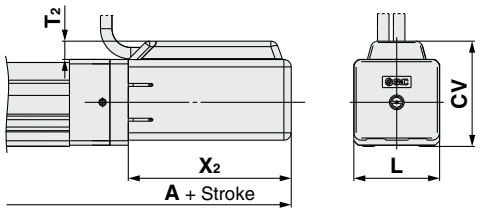

[mm]

Size	Stroke range	A	T2	X2	L	CV
16	Up to 100	169	7.5	66.5	35	43
	105 to 300	189				
25	Up to 100	198.5	7.5	68.5	46	54.5
	105 to 400	223.5				
32	Up to 100	220	7.5	73.5	60	68.5
	105 to 500	250				
40	Up to 100	242	7.5	95.5	60	68.5
	105 to 500	272				

With lock: LEY16/25/32/40 D□ A/B/C -□B

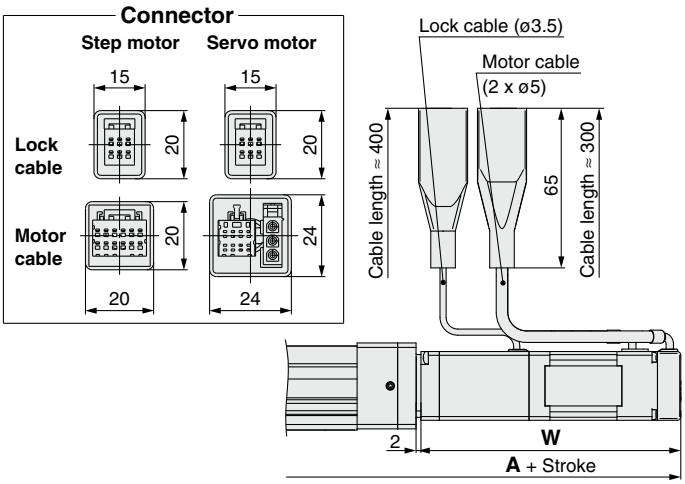

[mm]

Size	Stroke range	Step motor	Servo motor	Step motor	Servo motor
		A		W	
16	Up to 100	207.8	208.5	103.3	104
	105 to 300	227.8	228.5		
25	Up to 100	235.9	232.1	103.9	100.1
	105 to 400	260.9	257.1		
32	Up to 100	259.9	—	111.4	—
	105 to 500	289.9	—		
40	Up to 100	281.9	—	133.4	—
	105 to 500	311.9	—		

With lock/motor cover: LEY16/25/32/40 D□ A/B/C -□W

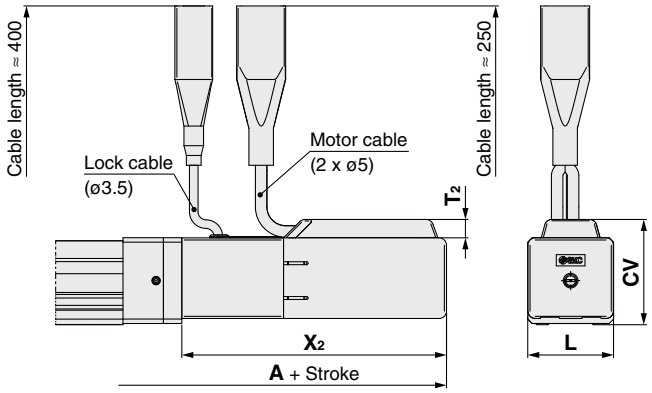

[mm]

Size	Stroke range	A	T2	X2	L	CV
16	Up to 100	210.5	7.5	108	35	43
	105 to 300	230.5				
25	Up to 100	239	7.5	109	46	54.4
	105 to 400	264				
32	Up to 100	263	7.5	116.5	60	68.5
	105 to 500	293				
40	Up to 100	285	7.5	138.5	60	68.5
	105 to 500	315				

Dimensions

End male thread: LEY 16/25/32/40 □□ A/B/C -□□M

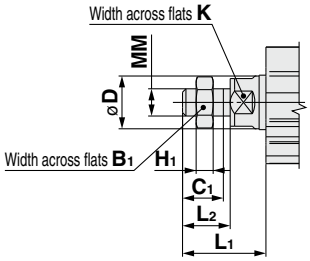

[mm]

Size	B1	C1	D	H1	K	L1	L2	MM
16	13	12	16	5	14	24.5	14	M8 x 1.25
25	22	20.5	20	8	17	38	23.5	M14 x 1.5
32, 40	22	20.5	25	8	22	42.0	23.5	M14 x 1.5

∗ The L1 measurement is when the unit is in the original position. At this position, 2 mm at the end.

∗ Refer to pages 499 and 500 for details on the rod end nut and mounting bracket.
∗ Refer to the "Handling" precautions on pages 574 to 577 when mounting end brackets such as knuckle joint or workpieces.

Foot bracket: LEY 16/25/32/40 □□ A/B/C -□□□L

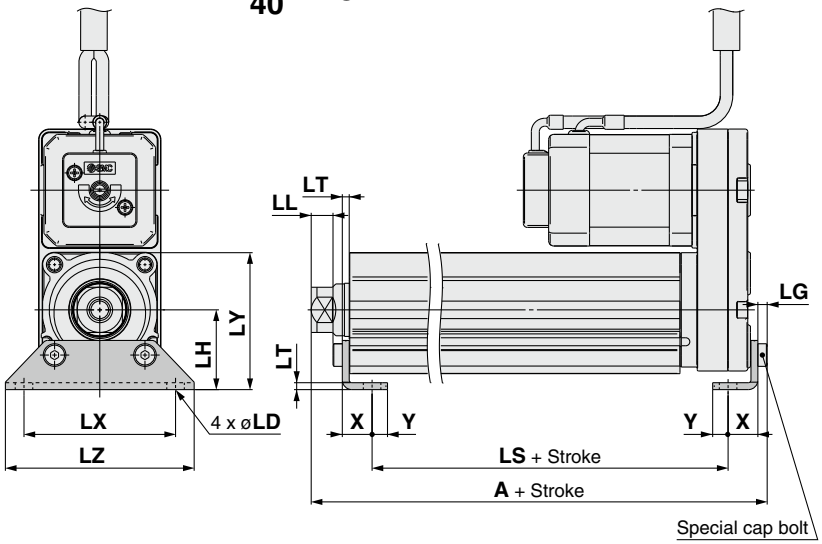

Outward mounting

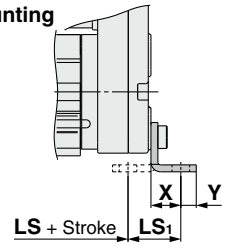

Included parts
- Foot bracket
- Body mounting bolt

Foot Bracket

[mm]

Size	Stroke range [mm]	A	LS	LS1	LL	LD	LG	LH	LT	LX	LY	LZ	X	Y
16	30 to 100	106.1	76.7	16.1	5.4	6.6	2.8	24	2.3	48	40.3	62	9.2	5.8
	105 to 300	126.1	96.7											
25	30 to 100	136.6	98.8	19.8	8.4	6.6	3.5	30	2.6	57	51.5	71	11.2	5.8
	105 to 400	161.6	123.8											
32	30 to 100	155.7	114	19.2	11.3	6.6	4	36	3.2	76	61.5	90	11.2	7
40	105 to 500	185.7	144											

Material: Carbon steel (Chromating)
∗ The A measurement is when the unit is in the original position. At this position, 2 mm at the end.
∗ When the motor mounting is the right or left side parallel type, the head side foot bracket should be mounted outward.

Dimensions

Rod flange: LEY16□□$^{A}_{B}$-□□□$^{}_{C}$F

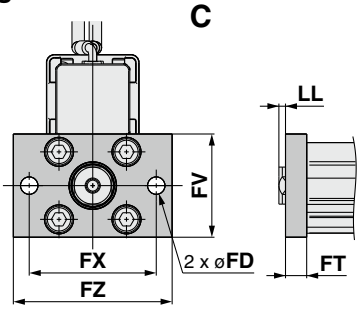

Head flange: LEY16□□$^{A}_{B}$-□□□$^{}_{C}$G

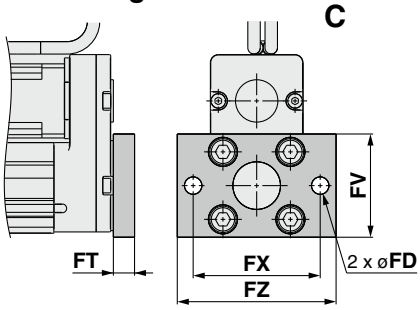

Rod flange: LEY32□□$^{25}_{40}$$^{A}_{B}$-□□□$^{}_{C}$F

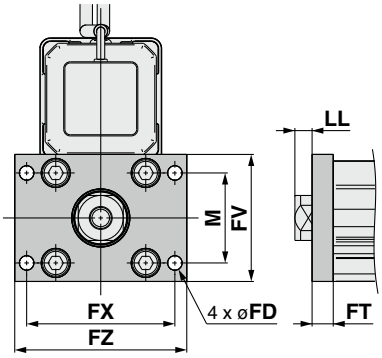

Head flange: LEY25□□$^{A}_{B}$-□□□$^{}_{C}$G

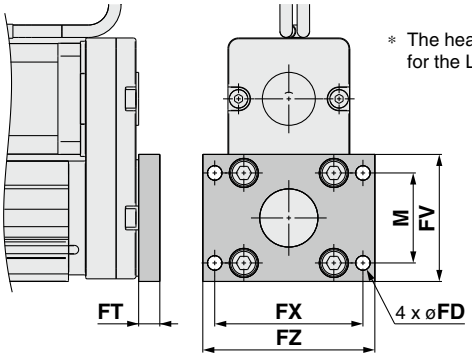

∗ The head flange type is not available for the LEY32/40.

Included parts
- Flange
- Body mounting bolt

Rod/Head Flange [mm]

Size	FD	FT	FV	FX	FZ	LL	M
16	6.6	8	39	48	60	2.5	—
25	5.5	8	48	56	65	6.5	34
32, 40	5.5	8	54	62	72	10.5	40

Material: Carbon steel (Nickel plating)

Double clevis: LEY16□□$^{A}_{B}$-□□□$^{}_{C}$D

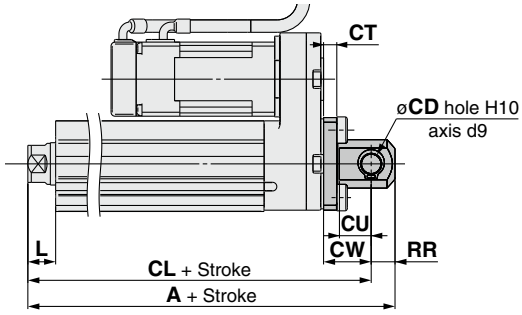

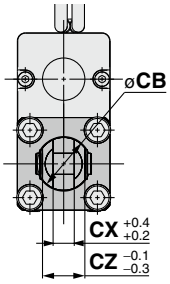

Included parts
- Double clevis
- Body mounting bolt
- Clevis pin
- Retaining ring

∗ Refer to pages 499 and 500 for details on the rod end nut and mounting bracket.

Double clevis: LEY32□□$^{25}_{40}$$^{A}_{B}$-□□□$^{}_{C}$D

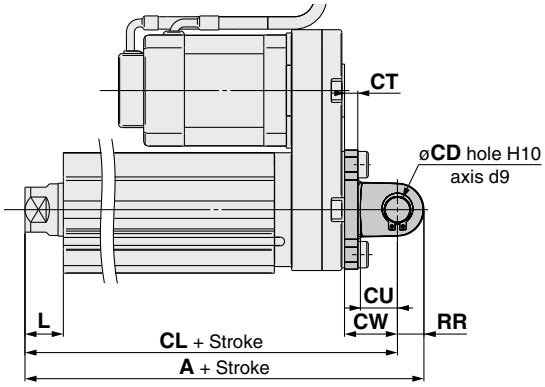

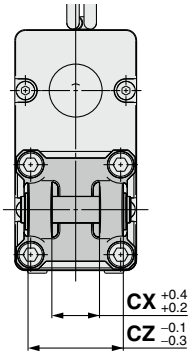

Double Clevis [mm]

Size	Stroke range [mm]	A	CL	CB	CD	CT
16	30 to 100	128	119	20	8	5
25	30 to 100	160.5	150.5	—	10	5
	105 to 200	185.5	175.5			
32 40	30 to 100	180.5	170.5	—	10	6
	105 to 200	210.5	200.5			

Size	Stroke range [mm]	CU	CW	CX	CZ	L	RR
16	30 to 100	12	18	8	16	10.5	9
25	30 to 100	14	20	18	36	14.5	10
	105 to 200						
32 40	30 to 100	14	22	18	36	18.5	10
	105 to 200						

Material: Cast iron (Coating)

∗ The A and CL measurements are when the unit is in the original position. At this position, 2 mm at the end.

Rod Type

Dust-tight/Water-jet-proof (IP65 Equivalent)
∗ Option

∗ For details, refer to page 1343 and onward.

LEY Series LEY25, 32, 63

Size 25, 32, 63

RoHS

LECY□ Series ▶p. 489 Dust-tight/Water-jet-proof ▶p. 925 Secondary Battery Compatible ▶p. 987

How to Order

LEY H 25 □ S2 B – 100 □ □ □ □ – S 2 A1 □

❶ ❷ ❸ ❹ ❺ ❻ ❼ ❽ ❾ ❿ ⓫ ⓬ ⓭ ⓮

❶ Accuracy

Nil	Basic type
H	High-precision type

❷ Size

25
32
63

❸ Motor mounting position

Nil	Top side parallel
R	Right side parallel
L	Left side parallel
D	In-line

❹ Motor type

Symbol	Type	Output [W]	Actuator size	Compatible drivers∗3
S2∗1	AC servo motor (Incremental encoder)	100	25	LECSA□-S1
S3		200	32	LECSA□-S3
S4		400	63	LECSA2-S4
T6∗2	AC servo motor (Absolute encoder)	100	25	LECSB2-T5 LECSC2-T5 LECSS2-T5 LECSN2-T5-□
T7		200	32	LECSB2-T7 LECSC2-T7 LECSS2-T7 LECSND2-T7-□
T8		400	63	LECSB2-T8 LECSC2-T8 LECSS2-T8 LECSND2-T8-□

∗1 For motor type S2, the compatible driver part number suffix is S1.
∗2 For motor type T6, the compatible driver part number is LECS□2-T5.
∗3 For details on the driver, refer to page 1110.

❺ Lead [mm]

Symbol	LEY25	LEY32∗1	LEY63
A	12	16 (20)	20
B	6	8 (10)	10
C	3	4 (5)	5
L	—	—	2.86∗2

∗1 The values shown in ( ) are the leads for the size 32 top/right/left side parallel motor types. (Equivalent leads which include the pulley ratio [1.25:1])
∗2 Only available for top/right/left side parallel motor types (Equivalent leads which include the pulley ratio [4:7])

❻ Stroke [mm]

30	30
to	to
800	800

∗ For details, refer to the applicable stroke table below.

❼ Dust-tight/Water-jet-proof (Only available for LEY63)

Symbol	LEY25/32	LEY63
Nil	IP4x equivalent	IP5x equivalent (Dust-protected)
P	—	IP65 equivalent (Dust-tight/ Water-jet-proof)/With vent hole tap

∗ When using the dust-tight/water-jet-proof (IP65 equivalent), correctly mount the fitting and tubing to the vent hole tap, and then place the end of the tubing in an area not exposed to dust or water.
∗ The fitting and tubing should be provided separately by the customer. Select [Applicable tubing O.D.: ø4 or more, Connection thread: Rc1/8].
∗ Cannot be used in environments exposed to cutting oil, etc. Take appropriate protective measures. For details on enclosure, refer to the "Enclosure" on page 577.

❽ Motor option

Nil	Without option
B	With lock∗1

∗1 When "With lock" is selected for the top/right/left side parallel motor types, the motor body will stick out from the end of the body for size 25 with strokes of 30 mm or less.
Check for interference with workpieces before selecting a model.

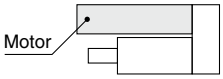

❾ Rod end thread

Nil	Rod end female thread
M	Rod end male thread (1 rod end nut is included.)

Applicable Stroke Table

●: Standard

Model \ Stroke [mm]	30	50	100	150	200	250	300	350	400	450	500	600	700	800	Manufacturable stroke range
LEY25	●	●	●	●	●	●	●	●	●	—	—	—	—	—	15 to 400
LEY32	●	●	●	●	●	●	●	●	●	●	●	—	—	—	20 to 500
LEY63	—	●	●	●	●	●	●	●	●	●	●	●	●	●	50 to 800

∗ Please contact SMC for non-standard strokes as they are produced as special orders.

For auto switches, refer to pages 502 to 505.

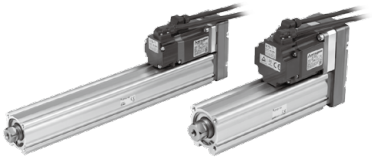

Motor mounting position: Parallel

Motor mounting position: In-line

⑩ Mounting*1

Symbol	Type	Motor mounting position	
		Parallel	In-line
Nil	Ends tapped/ Body bottom tapped*2	●	●
L	Foot bracket	●	—
F	Rod flange*2	●*4	●
G	Head flange*2	●*5	—
D	Double clevis*2	●	—

*1 The mounting bracket is shipped together with the product but does not come assembled.
*2 For the horizontal cantilever mounting of the rod flange, head flange, or ends tapped types, use the actuator within the following stroke range.
· LEY25: 200 mm or less · LEY32: 100 mm or less
· LEY63: 400 mm or less
*3 For the mounting of the double clevis type, use the actuator within the following stroke range.
· LEY25: 200 mm or less · LEY32: 200 mm or less
· LEY63: 300 mm or less
*4 The rod flange type is not available for the LEY25 with a 30 mm stroke and motor option "With lock."
*5 The head flange type is not available for the LEY32/63.

⑪ Cable type*1 *2

Nil	Without cable
S	Standard cable
R	Robotic cable

*1 A motor cable and encoder cable are included with the product. (A lock cable is also included if motor option "B: With lock" is selected.)
*2 Standard cable entry direction is
• Parallel: (A) Axis side
• In-line: (B) Counter axis side
(Refer to page 1123 for details.)

⑫ Cable length*1 [m]

Nil	Without cable
2	2
5	5
A	10

*1 The length of the motor, encoder, and lock cables are the same.

⑭ I/O cable length [m]*1

Nil	Without cable
H	Without cable (Connector only)
1	1.5

⑬ Driver type*1

	Compatible drivers	Power supply voltage [V]
Nil	Without driver	—
A1	LECSA1-S□	100 to 120
A2	LECSA2-S□	200 to 230
B2	LECSB2-T□	200 to 240
C2	LECSC2-T□	200 to 230
S2	LECSS2-T□	200 to 240
N2	LECSN2-T5	200 to 240
E2	LECSN2-T5-E	200 to 240
92	LECSN2-T5-9	200 to 240
P2	LECSN2-T5-P	200 to 240
ND2	LECSND2-T□	200 to 240
ED2	LECSND2-T□-E	200 to 240
9D2	LECSND2-T□-9	200 to 240
PD2	LECSND2-T□-P	200 to 240

*1 When a driver type is selected, a cable is included. Select the cable type and cable length.
Example)
S2S2: Standard cable (2 m) + Driver (LECSS2)
S2: Standard cable (2 m)
Nil: Without cable and driver
* When selecting "T6" for the motor type, select one of the following LECSN□-T series drivers: "N2," "E2," "92," or "P2."

*1 When "Nil: Without driver" is selected for the driver type, only "Nil: Without cable" can be selected. Refer to page 1124 if an I/O cable is required. (Options are shown on page 1124.)

Compatible Drivers

Driver type	Pulse input type/ Positioning type	Pulse input type	CC-Link direct input type	SSCNETⅢ/H type	Network card type
Series	**LECSA**	**LECSB-T**	**LECSC-T**	**LECSS-T**	**LECSN□-T**
Number of point tables*1	Up to 7	Up to 255	Up to 255 (2 stations occupied)	—	Up to 255
Pulse input	○	○	—	—	—
Applicable network	—	—	CC-Link	SSCNETⅢ/H	PROFINET EtherCAT EtherNet/IP™
Control encoder	Incremental 17-bit encoder	Absolute 22-bit encoder	Absolute 18-bit encoder	Absolute 22-bit encoder	Absolute 22-bit encoder
Communication function	USB communication	USB communication, RS422 communication	USB communication, RS422 communication	USB communication	USB communication
Power supply voltage [V]	100 to 120 VAC (50/60 Hz) 200 to 230 VAC (50/60 Hz)	200 to 240 VAC (50/60 Hz)	200 to 230 VAC (50/60 Hz)	200 to 240 VAC (50/60 Hz)	200 to 240 VAC (50/60 Hz)
Reference page	1109				

*1 The LECSN□-T point table mode is only available for PROFINET and EtherCAT.

Specifications: LECSA

∗ Refer to the next page for the LECSS-T.

	Model		LEY25S2 (Parallel)/LEY25DS2 (In-line)			LEY32S3 (Parallel)			LEY32DS3 (In-line)		
Actuator specifications	Work load [kg]	Horizontal∗1	18	50	50	30	60	60	30	60	60
		Vertical	8	16	30	9	19	37	12	24	46
	Force [N]∗2 (Set value: 15 to 30%)		65 to 131	127 to 255	242 to 485	79 to 157	154 to 308	294 to 588	98 to 197	192 to 385	368 to 736
	Max.∗3 speed [mm/s] Stroke range	Up to 300	900	450	225	1200	600	300	1000	500	250
		305 to 400	600	300	150						
		405 to 500	—	—	—	800	400	200	640	320	160
	Pushing speed [mm/s]∗4		35 or less			30 or less			30 or less		
	Max. acceleration/deceleration [mm/s²]		5000			5000					
	Positioning repeatability [mm]	Basic type	±0.02								
		High-precision type	±0.01								
	Lost motion [mm]∗5	Basic type	0.1 or less								
		High-precision type	0.05 or less								
	Lead [mm] (including pulley ratio)		12	6	3	20	10	5	16	8	4
	Impact/Vibration resistance [m/s²]∗6		50/20			50/20					
	Actuation type		Ball screw + Belt (LEY□)/Ball screw (LEY□D)			Ball screw + Belt [1.25:1]			Ball screw		
	Guide type		Sliding bushing (Piston rod)			Sliding bushing (Piston rod)					
	Operating temperature range [°C]		5 to 40			5 to 40					
	Operating humidity range [%RH]		90 or less (No condensation)			90 or less (No condensation)					
	Enclosure		IP40								
	Regeneration option		May be required depending on speed and work load (Refer to pages 435 and 436.)								
Electric specifications	Motor output/Size		100 W/□40			200 W/□60					
	Motor type		AC servo motor (100/200 VAC)			AC servo motor (100/200 VAC)					
	Encoder		Motor type S2, S3: Incremental 17-bit encoder (Resolution: 131072 p/rev)								
	Power [W]∗7		Max. power 445			Max. power 724			Max. power 724		
Lock unit specifications	Type∗8		Non-magnetizing lock								
	Holding force [N]		131	255	485	157	308	588	197	385	736
	Power [W] at 20°C		6.3			7.9			7.9		
	Rated voltage [V]		24 VDC $^{0}_{-10\%}$								

∗1 This is the max. value of the horizontal work load. An external guide is necessary to support the load (Friction coefficient of guide: 0.1 or less). The actual work load changes according to the condition of the external guide. Confirm the load using the actual device.

∗2 The force setting range (set values for the driver) for the force control with the torque control mode. The force and duty ratio change according to the set value. Set it while referencing the "Force Conversion Graph" on page 437.
When the control equivalent to the pushing operation of the JXC51/61 series controller is performed, select the LECSS-T or LECSB2-T driver. The point table no. input method is used for the LECSB2-T. When selecting the LECSS2-T, combine it with a Simple Motion module (manufactured by Mitsubishi Electric Corporation) which has a pushing operation function.

∗3 The allowable speed changes according to the stroke. Set the number of rotations according to speed.

∗4 The allowable collision speed for collision with the workpiece with the torque control mode

∗5 A reference value for correcting errors in reciprocal operation

∗6 Impact resistance: No malfunction occurred when the actuator was tested with a drop tester in both an axial direction and a perpendicular direction to the lead screw. (The test was performed with the actuator in the initial state.)
Vibration resistance: No malfunction occurred in a test ranging between 45 to 2000 Hz. The test was performed in both an axial direction and a perpendicular direction to the lead screw. (The test was performed with the actuator in the initial state.)

∗7 Indicates the max. power during operation (including the driver)
When selecting the power supply capacity, refer to the power supply capacity in the operation manual of each driver.

∗8 Only when motor option "With lock" is selected

Weight

Product Weight

[kg]

Series		LEY25S2 (Motor mounting position: Parallel)									LEY32S3 (Motor mounting position: Parallel)										
Stroke [mm]		30	50	100	150	200	250	300	350	400	30	50	100	150	200	250	300	350	400	450	500
Motor type	Incremental encoder	1.31	1.38	1.55	1.81	1.99	2.16	2.34	2.51	2.69	2.42	2.53	2.82	3.29	3.57	3.85	4.14	4.42	4.70	4.98	5.26

Series		LEY25DS2 (Motor mounting position: In-line)									LEY32DS3 (Motor mounting position: In-line)										
Stroke [mm]		30	50	100	150	200	250	300	350	400	30	50	100	150	200	250	300	350	400	450	500
Motor type	Incremental encoder	1.34	1.41	1.58	1.84	2.02	2.19	2.37	2.54	2.72	2.44	2.55	2.84	3.31	3.59	3.87	4.16	4.44	4.72	5.00	5.28

Additional Weight

[kg]

Size		25	32
Lock	Incremental encoder	0.20	0.40
Rod end male thread	Male thread	0.03	0.03
	Nut	0.02	0.02
Foot bracket (2 sets including mounting bolt)		0.08	0.14
Rod flange (including mounting bolt)		0.17	0.20
Head flange (including mounting bolt)			
Double clevis (including pin, retaining ring, and mounting bolt)		0.16	0.22

Specifications: LECS□-T

	Model		LEY25T6 (Parallel)/LEY25DT6 (In-line)			LEY32T7 (Parallel)			LEY32DT7 (In-line)		
Actuator specifications	Work load [kg]	Horizontal*1	18	50	50	30	60	60	30	60	60
		Vertical	8	16	30	9	19	37	12	24	46
	Force [N]*2 (Set value: 12 to 24%)		65 to 131	127 to 255	242 to 485	79 to 157	154 to 308	294 to 588	98 to 197	192 to 385	368 to 736
	Max.*3 speed [mm/s]	Stroke range: Up to 300	900	450	225	1200	600	300	1000	500	250
		Stroke range: 305 to 400	600	300	150						
		Stroke range: 405 to 500	—	—	—	800	400	200	640	320	160
	Pushing speed [mm/s]*4		35 or less			30 or less			30 or less		
	Max. acceleration/deceleration [mm/s²]		5000			5000					
	Positioning repeatability [mm]	Basic type	±0.02			±0.02					
		High-precision type	±0.01			±0.01					
	Lost motion*5 [mm]	Basic type	0.1 or less								
		High-precision type	0.05 or less								
	Lead [mm] (including pulley ratio)		12	6	3	20	10	5	16	8	4
	Impact/Vibration resistance [m/s²]*6		50/20			50/20					
	Actuation type		Ball screw + Belt (LEY□)/Ball screw (LEY□D)			Ball screw + Belt [1.25:1]			Ball screw		
	Guide type		Sliding bushing (Piston rod)			Sliding bushing (Piston rod)					
	Operating temperature range [°C]		5 to 40			5 to 40					
	Operating humidity range [%RH]		90 or less (No condensation)			90 or less (No condensation)					
	Enclosure		IP40								
	Regeneration option		May be required depending on speed and work load (Refer to pages 435 and 436.)								
Electric specifications	Motor output/Size		100 W/□40			200 W/□60					
	Motor type		AC servo motor (200 VAC)			AC servo motor (200 VAC)					
	Encoder*9		Motor type T6, T7: Absolute 22-bit encoder (Resolution: 4194304 p/rev) (For LECSB2-T□, LECSS2-T□, LECSN□-T□) Motor type T6, T7: Absolute 18-bit encoder (Resolution: 262144 p/rev) (For LECSC2-T□)								
	Power [W]*7		Max. power 445			Max. power 724			Max. power 724		
Lock unit specifications	Type*8		Non-magnetizing lock								
	Holding force [N]		131	255	485	157	308	588	197	385	736
	Power [W] at 20°C		6.3			7.9			7.9		
	Rated voltage [V]		24 VDC $^{0}_{-10\%}$								

*1 This is the max. value of the horizontal work load. An external guide is necessary to support the load (Friction coefficient of guide: 0.1 or less). The actual work load changes according to the condition of the external guide. Confirm the load using the actual device.

*2 The force setting range (set values for the driver) for the force control with the torque control mode. Set it while referencing the "Force Conversion Graph (Guide)" on page 438.
The torque control mode is not available for the LECSC-T.
The drivers applicable to the pushing operation are "LECSB-T" and "LECSS-T."
The LECSB2-T is only applicable when the control method is positioning. The point table is used to set the pushing operation settings. To set the pushing operation settings, an additional dedicated file (pushing operation extension file) must be downloaded separately to be used with the setup software (MR Configurator2™: LEC-MRC2□). Please download this dedicated file from the SMC website: https://www.smcworld.com
When selecting the LECSS2-T, combine it with upper level equipment (such as the Simple Motion module manufactured by Mitsubishi Electric Corporation) which has a pushing operation function.
** For customer-provided PLC and motion controller setting and usage instructions, confirm with the retailer or manufacturer.

*3 The allowable speed changes according to the stroke.

*4 The allowable collision speed for collision with the workpiece with the torque control mode

*5 A reference value for correcting errors in reciprocal operation

*6 Impact resistance: No malfunction occurred when the actuator was tested with a drop tester in both an axial direction and a perpendicular direction to the lead screw. (The test was performed with the actuator in the initial state.)
Vibration resistance: No malfunction occurred in a test ranging between 45 to 2000 Hz. The test was performed in both an axial direction and a perpendicular direction to the lead screw. (The test was performed with the actuator in the initial state.)

*7 Indicates the max. power during operation (including the driver)
When selecting the power supply capacity, refer to the power supply capacity in the operation manual of each driver.

*8 Only when motor option "With lock" is selected

*9 The resolution will change depending on the driver type.

Weight

Product Weight

[kg]

Series		LEY25T6 (Motor mounting position: Parallel)									LEY32T7 (Motor mounting position: Parallel)										
Stroke [mm]		30	50	100	150	200	250	300	350	400	30	50	100	150	200	250	300	350	400	450	500
Motor type	Absolute encoder	1.4	1.5	1.6	1.9	2.0	2.2	2.4	2.6	2.7	2.3	2.4	2.7	3.2	3.5	3.8	4.1	4.3	4.6	4.9	5.2

Series		LEY25DT6 (Motor mounting position: In-line)									LEY32DT7 (Motor mounting position: In-line)										
Stroke [mm]		30	50	100	150	200	250	300	350	400	30	50	100	150	200	250	300	350	400	450	500
Motor type	Absolute encoder	1.4	1.5	1.6	1.9	2.1	2.2	2.4	2.6	2.8	2.4	2.5	2.8	3.2	3.5	3.8	4.1	4.4	4.6	4.9	5.2

Additional Weight

[kg]

Size		25	32
Lock	Absolute encoder [T6/T7]	0.3	0.4
Rod end male thread	Male thread	0.03	0.03
	Nut	0.02	0.02
Foot bracket (2 sets including mounting bolt)		0.08	0.14
Rod flange (including mounting bolt)		0.17	0.20
Head flange (including mounting bolt)			
Double clevis (including pin, retaining ring, and mounting bolt)		0.16	0.22

Specifications

Model			LEY63S4/T8 (Parallel)				LEY63DS4/T8 (In-line)		
Actuator specifications	Work load [kg]	Horizontal∗1	40	70	80	200	40	70	80
		Vertical∗11	19	38	72	115	19	38	72
	Force [N]/Set value∗2: 15 to 50%∗3, 4		156 to 521	304 to 1012	573 to 1910	1003 to 3343	156 to 521	304 to 1012	573 to 1910
	Max. speed∗5 [mm/s]	Stroke range: Up to 500	1000	500	250	70	1000	500	250
		Stroke range: 505 to 600	800	400	200		800	400	200
		Stroke range: 605 to 700	600	300	150		600	300	150
		Stroke range: 705 to 800	500	250	125		500	250	125
	Pushing speed [mm/s]∗6		30 or less						
	Max. acceleration/deceleration [mm/s²]		5000			3000	5000		
	Positioning repeatability [mm]	Basic type	±0.02						
		High-precision type	±0.01						
	Lost motion [mm]∗7	Basic type	0.1 or less						
		High-precision type	0.05 or less						
	Screw lead [mm] (including pulley ratio)		20	10	5	5 (2.86)	20	10	5
	Impact/Vibration resistance [m/s²]∗8		50/20						
	Actuation type		Ball screw + Belt			Ball screw + Belt (Pulley ratio 4:7)	Ball screw		
	Guide type		Sliding bushing (Piston rod)						
	Operating temperature range [°C]		5 to 40						
	Operating humidity range [%RH]		90 or less (No condensation)						
	Enclosure		IP40						
	Regeneration option		May be required depending on speed and work load (Refer to pages 435 and 436.)						
Electric specifications	Motor output/Size		400 W/□60						
	Motor type		AC servo motor (200 VAC)						
	Encoder∗12		Motor type S4: Incremental 17-bit encoder (Resolution: 131072 p/rev) Motor type T8: Absolute 22-bit encoder (Resolution: 4194304 p/rev) (For LECSB2-T8, LECSS2-T8, LECSND2-T8) Motor type T8: Absolute 18-bit encoder (Resolution: 262144 p/rev) (For LECSC2-T8)						
	Power [W]∗9		Max. power 1275						
Lock unit specifications	Type∗10		Non-magnetizing lock						
	Holding force [N]		313	607	1146	2006	313	607	1146
	Power [W] at 20°C		7.9						
	Rated voltage [V]		24 VDC$^{0}_{-10\%}$						

∗1 This is the max. value of the horizontal work load. An external guide is necessary to support the load (Friction coefficient of guide: 0.1 or less). The actual work load changes according to the condition of the external guide. Confirm the load using the actual device.

∗2 Set values for the driver

∗3 The force setting range (set values for the driver) for the force control with the torque control mode. The force and duty ratio change according to the set value. Set it while referencing the "Force Conversion Graph" on pages 437 and 438.
The torque control mode is not available for the LECSC-T.
The drivers applicable to the pushing operation are "LECSB-T" and "LECSS-T."
The LECSB2-T is only applicable when the control method is positioning. The point table is used to set the pushing operation settings.
To set the pushing operation settings, an additional dedicated file (pushing operation extension file) must be downloaded separately to be used with the setup software (MR Configurator2™: LEC-MRC2□). Please download this dedicated file from the SMC website: https://www.smcworld.com
When selecting the LECSS2-T, combine it with upper level equipment (such as the Simple Motion module manufactured by Mitsubishi Electric Corporation) which has a pushing operation function.
∗∗ For customer-provided PLC and motion controller setting and usage instructions, confirm with the retailer or manufacturer.

∗4 For the motor type T8, the set value is from 12 to 40%.

∗5 The allowable speed changes according to the stroke. Set the number of rotations according to speed.

∗6 The allowable collision speed for collision with the workpiece with the torque control mode

∗7 A reference value for correcting errors in reciprocal operation

∗8 Impact resistance: No malfunction occurred when the actuator was tested with a drop tester in both an axial direction and a perpendicular direction to the lead screw. (The test was performed with the actuator in the initial state.)
Vibration resistance: No malfunction occurred in a test ranging between 45 to 2000 Hz. The test was performed in both an axial direction and a perpendicular direction to the lead screw. (The test was performed with the actuator in the initial state.)

∗9 Indicates the max. power during operation (including the driver)
When selecting the power supply capacity, refer to the power supply capacity in the operation manual of each driver.

∗10 Only when motor option "With lock" is selected

∗11 When mounting vertically and using the product facing upwards in an environment where water is present, take necessary measures to prevent water from splashing on the rod cover, because water will accumulate on the rod seal due to the structure of the product.

∗12 For motor type T8, the resolution will change depending on the driver type.

Weight

Product Weight

[kg]

Series		LEY63S4/T8 (Motor mounting position: Parallel)												
Stroke [mm]		50	100	150	200	250	300	350	400	450	500	600	700	800
Motor type	Incremental encoder	4.9	5.4	6.0	6.6	7.8	8.3	8.9	9.4	10.0	10.5	12.2	13.4	14.5
	Absolute encoder (Motor type T8)	4.9	5.4	6.0	6.6	7.8	8.3	8.9	9.4	10.0	10.5	12.2	13.4	14.5

Series		LEY63DS4/T8 (Motor mounting position: In-line)												
Stroke [mm]		50	100	150	200	250	300	350	400	450	500	600	700	800
Motor type	Incremental encoder	5.1	5.6	6.2	6.7	7.9	8.4	9.0	9.6	10.2	10.7	12.4	13.5	14.7
	Absolute encoder (Motor type T8)	5.1	5.6	6.2	6.7	7.9	8.4	9.0	9.6	10.2	10.7	12.4	13.5	14.7

Additional Weight

[kg]

Size		63
Lock	Incremental encoder	0.4
	Absolute encoder (Motor type T8)	0.4
Rod end male thread	Male thread	0.12
	Nut	0.04
Foot bracket (2 sets including mounting bolt)		0.26
Rod flange (including mounting bolt)		0.51
Double clevis (including pin, retaining ring, and mounting bolt)		0.58

Construction

Top side parallel motor type: LEY25/LEY32/LEY63

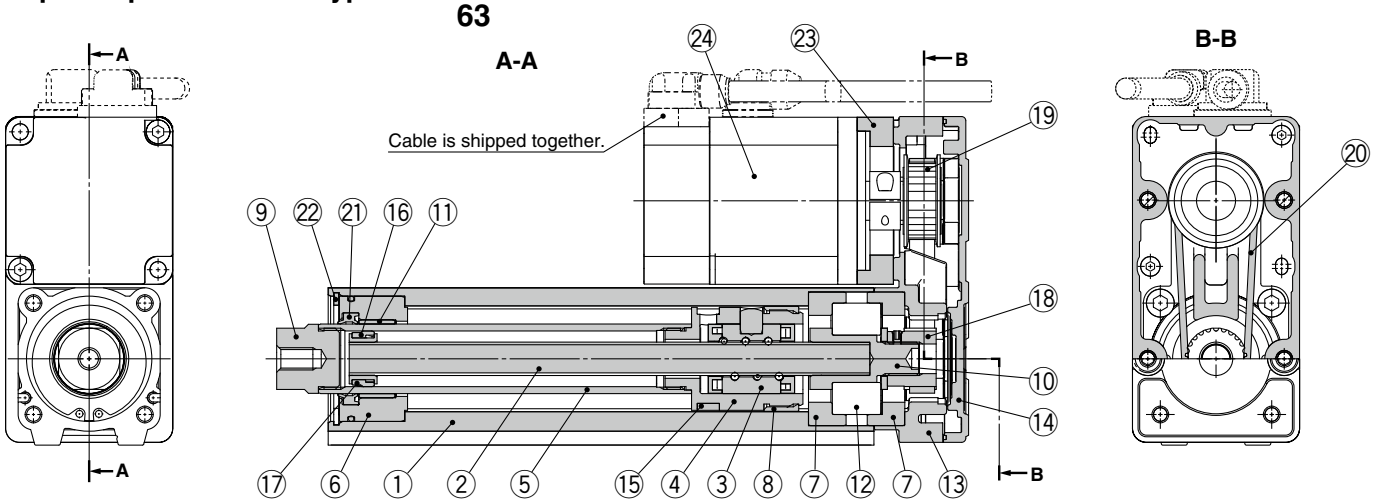

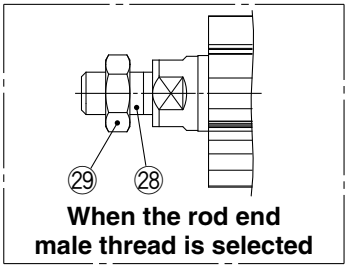

In-line motor type: LEY25D/LEY32D/LEY63D

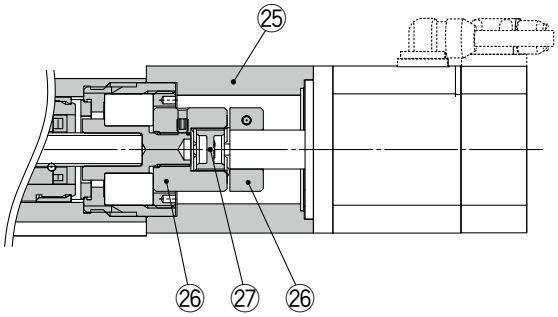

Component Parts

No.	Description	Material	Note
1	**Body**	Aluminum alloy	Anodized
2	**Ball screw shaft**	Alloy steel	
3	**Ball screw nut**	Synthetic resin/Alloy steel	
4	**Piston**	Aluminum alloy	
5	**Piston rod**	Stainless steel	Hard chrome plating
6	**Rod cover**	Aluminum alloy	
7	**Bearing holder**	Aluminum alloy	
8	**Rotation stopper**	Synthetic resin	
9	**Socket**	Free cutting carbon steel	Nickel plating
10	**Connected shaft**	Free cutting carbon steel	Nickel plating
11	**Bushing**	Bearing alloy	
12	**Bearing**	—	
13	**Return box**	Aluminum die-cast	Coating
14	**Return plate**	Aluminum die-cast	Coating
15	**Magnet**	—	
16	**Wear ring holder**	Stainless steel	Stroke 101 mm or more
17	**Wear ring**	Synthetic resin	Stroke 101 mm or more
18	**Screw shaft pulley**	Aluminum alloy	
19	**Motor pulley**	Aluminum alloy	
20	**Belt**	—	
21	**Seal**	NBR	
22	**Retaining ring**	Steel for spring	

No.	Description	Material	Note
23	**Motor adapter**	Aluminum alloy	Coating
24	**Motor**	—	
25	**Motor block**	Aluminum alloy	Coating
26	**Hub**	Aluminum alloy	
27	**Spider**	Urethane	
28	**Socket (Male thread)**	Free cutting carbon steel	Nickel plating
29	**Nut**	Alloy steel	Zinc chromating

Replacement Parts (Top/Right/Left side parallel only)/Belt

No.	Size	Order no.
20	25	LE-D-2-2
	32	LE-D-2-4

No.	Size	Lead	Order no.
20	63	A/B/C	LE-D-2-5
		L	LE-D-2-6

Replacement Parts/Grease Pack

Applied portion	Order no.
Piston rod	GR-S-010 (10 g) GR-S-020 (20 g)

Dimensions: Top/Right/Left Side Parallel Motor

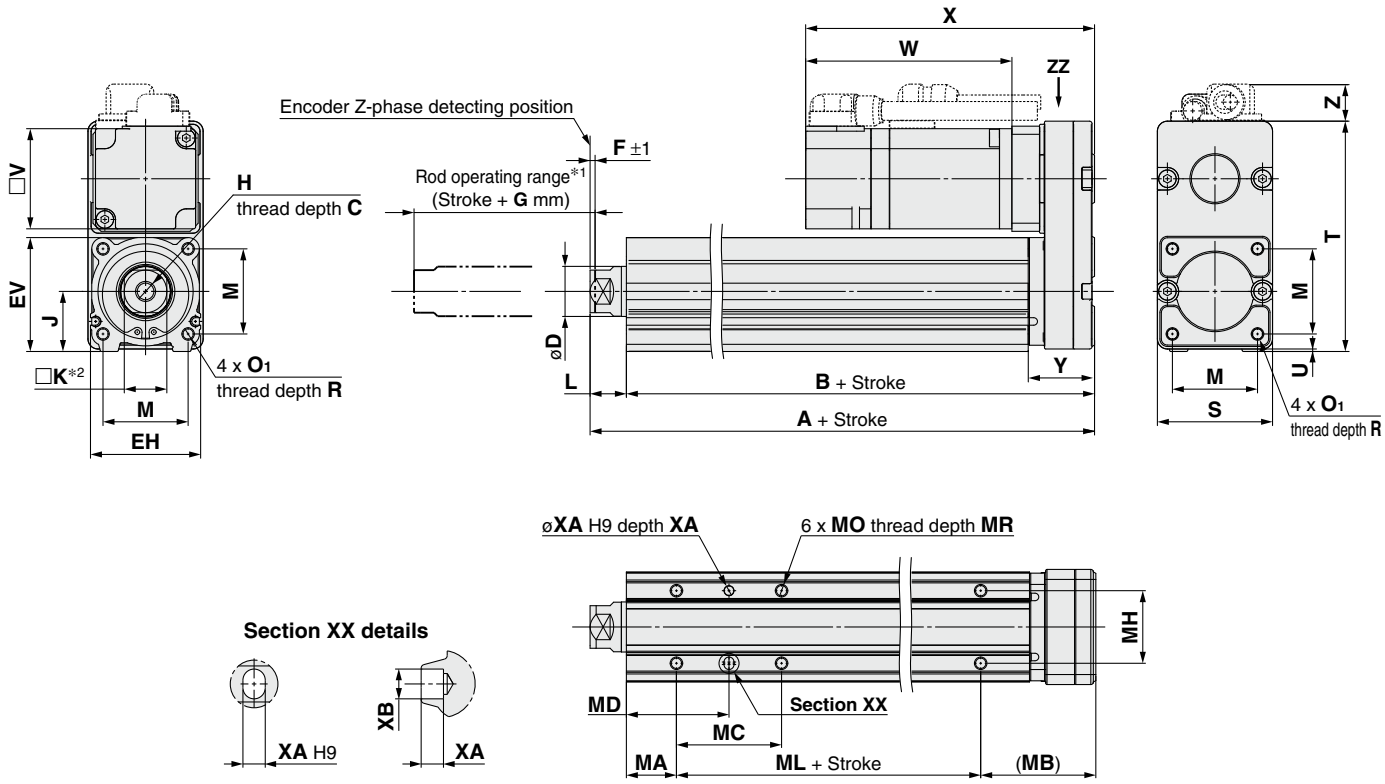

*1 This is the range within which the rod can move. Make sure that workpieces mounted on the rod do not interfere with other workpieces or the facilities around the rod.
*2 The direction of rod end width across flats (□K) differs depending on the products.

IP65 equivalent (Dust-tight/Water-jet-proof): LEY63□□□-□P
(View ZZ)

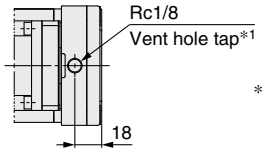

*1 When using the dust-tight/water-jet-proof (IP65 equivalent), correctly mount the fitting and tubing to the vent hole tap, and then place the end of the tubing in an area not exposed to dust or water. The fitting and tubing should be provided separately by the customer.
Select [Applicable tubing O.D.: ø4 or more, Connection thread: Rc1/8].

Dimensions: Top/Right/Left Side Parallel Motor

[mm]

Size	Stroke range [mm]	A	B	C	D	EH	EV	H	J	K	L	M	O_1	R	S	T	U	Y	V
25	30 to 100	130.5	116	13	20	44	45.5	M8 x 1.25	24	17	14.5	34	M5 x 0.8	8	46	92	1	26.5	40
	105 to 400	155.5	141																
32	30 to 100	148.5	130	13	25	51	56.5	M8 x 1.25	31	22	18.5	40	M6 x 1.0	10	60	118	1	34	60
	105 to 500	178.5	160																
63	50 to 200	192.6	155.2	21	40	76	82	M16 x 2	44	36	37.4	60	M8 x 1.25	16	80	146	4	32.2	60
	205 to 500	227.6	190.2																
	505 to 800	262.6	225.2																

Size	Stroke range [mm]	Incremental encoder [S2/S3/S4]						Absolute encoder [T6/T7/T8]						F	G
		Without lock			With lock			Without lock			With lock				
		W	X	Z	W	X	Z	W	X	Z	W	X	Z		
25	30 to 100	87	120	14.1	123.9	156.9	15.8	82.4	115.4	14.1	123	156	15.8	2	4
	105 to 400														
32	30 to 100	88.2	128.2	17.1	116.8	156.8	17.1	76.6	116.6	17.1	113.4	153.4	17.1	2	4
	105 to 500														
63	50 to 200	110.2	150.2	15.6 (16.6)*1	138.8	178.8	15.6 (16.6)*1	98.3	138.3	15.6 (16.6)*1	135.1	175.1	15.6 (16.6)*1	4	8
	205 to 500														
	505 to 800														

*1 The values in ( ) are the dimensions when L is selected for screw lead.

Body Bottom Tapped

[mm]

Size	Stroke range [mm]	MA	MB	MC	MD	MH	ML	MO	MR	XA	XB
25	30 to 35	20	46	24	32	29	50	M5 x 0.8	6.5	4	5
	40 to 100			42	41						
	105 to 120						75				
	125 to 200			59	49.5						
	205 to 400			76	58						
32	30 to 35	25	55	22	36	30	50	M6 x 1	8.5	5	6
	40 to 100			36	43						
	105 to 120						80				
	125 to 200			53	51.5						
	205 to 500			70	60						
63	50 to 70	38	—	24	50	44	65	M8 x 1.25	10	6	7
	75 to 120			45	60.5						
	125 to 200			58	67						
	205 to 500			86	81		100				
	505 to 800						135				

Left side parallel motor type: LEY 25/32/63 L

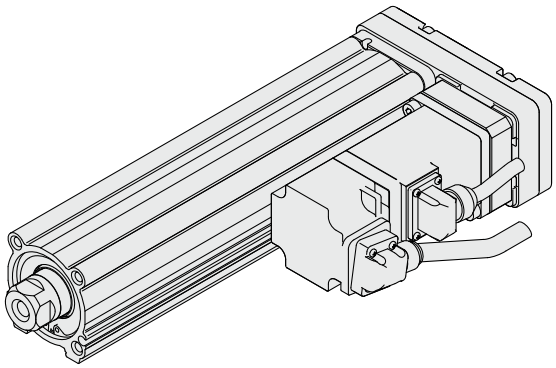

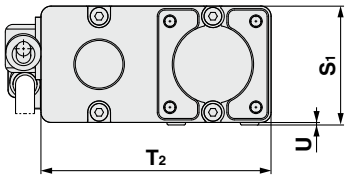

Right side parallel motor type: LEY 25/32/63 R

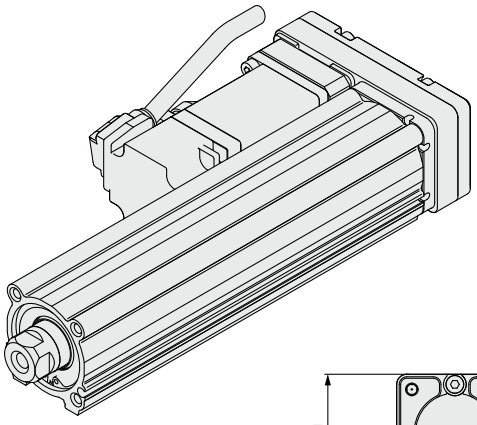

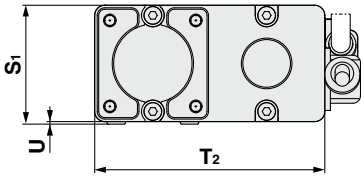

[mm]

Size	S_1	T_2	U
25	47	91	1
32	61	117	1
63	84	142	4

* When the motor is mounted on the left or right side in parallel, the groove for auto switch on the side to which the motor is mounted is hidden.

Dimensions: In-line Motor

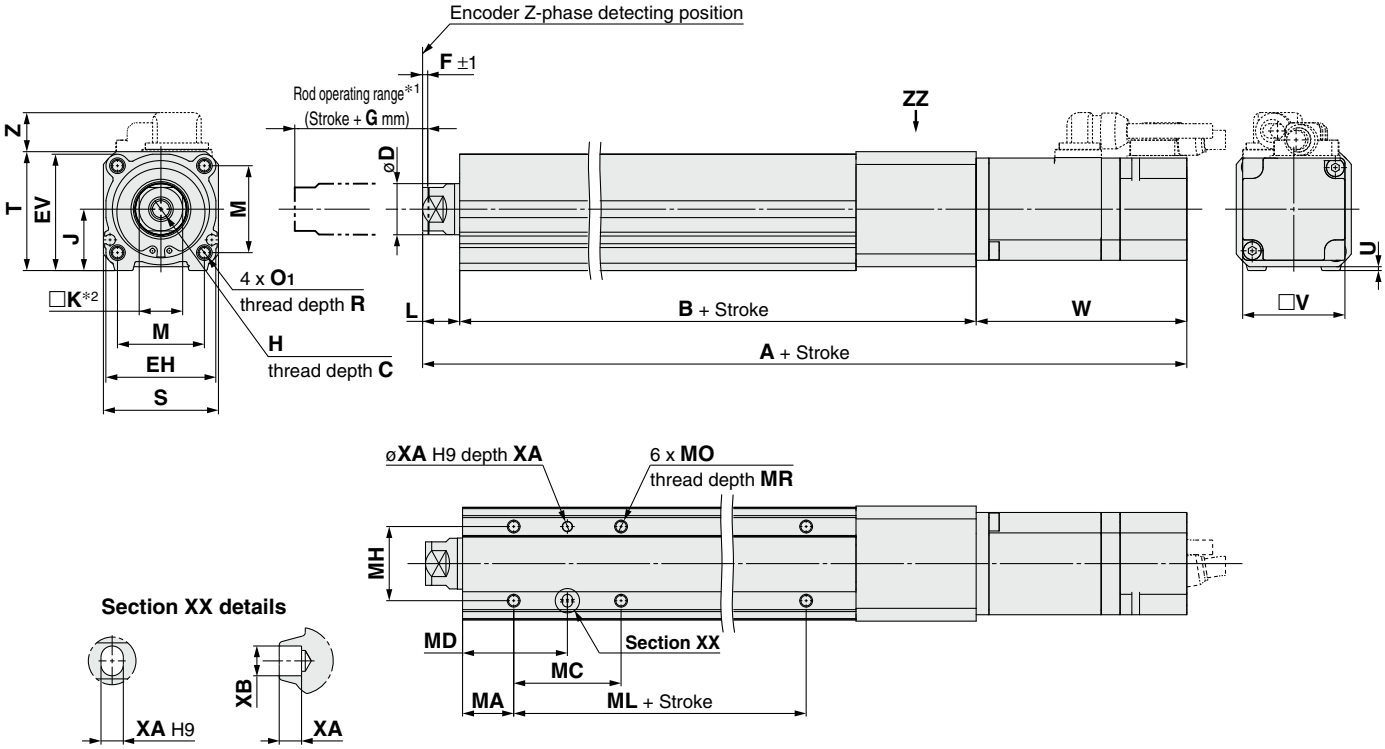

*1 This is the range within which the rod can move. Make sure that workpieces mounted on the rod do not interfere with other workpieces or the facilities around the rod.
*2 The direction of rod end width across flats (□K) differs depending on the products.

IP65 equivalent (Dust-tight/Water-jet-proof): LEY63D□□-□P (View ZZ)

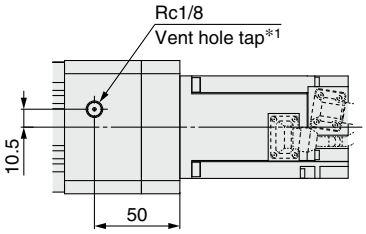

*1 When using the dust-tight/water-jet-proof (IP65 equivalent), correctly mount the fitting and tubing to the vent hole tap, and then place the end of the tubing in an area not exposed to dust or water. The fitting and tubing should be provided separately by the customer.
Select [Applicable tubing O.D.: ø4 or more, Connection thread: Rc1/8].

Dimensions: In-line Motor

[mm]

Size	Stroke range [mm]	C	D	EH	EV	H	J	K	L	M	O1	R	S	T	U	B	V
25	30 to 100	13	20	44	45.5	M8 x 1.25	24	17	14.5	34	M5 x 0.8	8	45	46.5	1.5	136.5	40
	105 to 400															161.5	
32	30 to 100	13	25	51	56.5	M8 x 1.25	31	22	18.5	40	M6 x 1.0	10	60	61	1	156	60
	105 to 500															186	
63	50 to 200	21	40	76	82	M16 x 2	44	36	37.4	60	M8 x 1.25	16	78	83	5	190.7	60
	205 to 500															225.7	
	505 to 800															260.7	

Size	Stroke range [mm]	Incremental encoder [S2/S3/S4]						Absolute encoder [T6/T7/T8]						F	G
		Without lock			With lock			Without lock			With lock				
		A	W	Z	A	W	Z	A	W	Z	A	W	Z		
25	30 to 100	238	87	14.6	274.9	123.9	16.3	233.4	82.4	14.6	274	123	16.3	2	4
	105 to 400	263			299.9			258.4			299				
32	30 to 100	262.7	88.2	17.1	291.3	116.8	17.1	251.1	76.6	17.1	287.9	113.4	17.1	2	4
	105 to 500	292.7			321.3			281.1			317.9				
63	50 to 200	338.3	110.2	8.1	366.9	138.8	8.1	326.4	98.3	8.1	363.2	135.1	8.1	4	8
	205 to 500	373.3			401.9			361.4			398.2				
	505 to 800	408.3			436.9			396.4			433.2				

Body Bottom Tapped

[mm]

Size	Stroke range [mm]	MA	MC	MD	MH	ML	MO	MR	XA	XB
25	30 to 35	20	24	32	29	50	M5 x 0.8	6.5	4	5
	40 to 100		42	41						
	105 to 120					75				
	125 to 200		59	49.5						
	205 to 400		76	58						
32	30 to 35	25	22	36	30	50	M6 x 1	8.5	5	6
	40 to 100		36	43						
	105 to 120					80				
	125 to 200		53	51.5						
	205 to 500		70	60						
63	50 to 70	38	24	50	44	65	M8 x 1.25	10	6	7
	75 to 120		45	60.5						
	125 to 200		58	67						
	205 to 500		86	81		100				
	505 to 800					135				

Dimensions

End male thread: LEY 25/32/63 □□ A/B/C/L -□□M

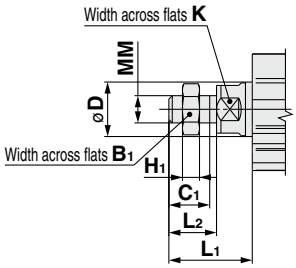

* Refer to pages 499 and 500 for details on the rod end nut and mounting bracket.
* Refer to the "Handling" precautions on pages 574 to 577 when mounting end brackets such as knuckle joint or workpieces.

[mm]

Size	B_1	C_1	D	H_1	K	L_1	L_2	MM
25	22	20.5	20	8	17	38	23.5	M14 x 1.5
32	22	20.5	25	8	22	42.0	23.5	M14 x 1.5
63	27	26	40	11	36	76.4	39	M18 x 1.5

* The L_1 measurement is when the unit is in the Z-phase first detecting position. At this position, 2 mm at the end (size 25, 32) and 4 mm at the end (size 63).

Foot bracket: LEY 25/32/63 □□ A/B/C/L -□□□L

Included parts
- Foot bracket
- Body mounting bolt

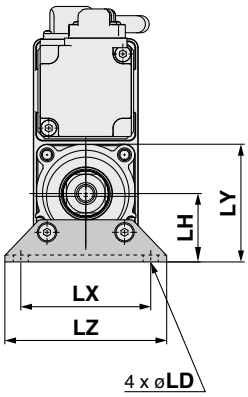

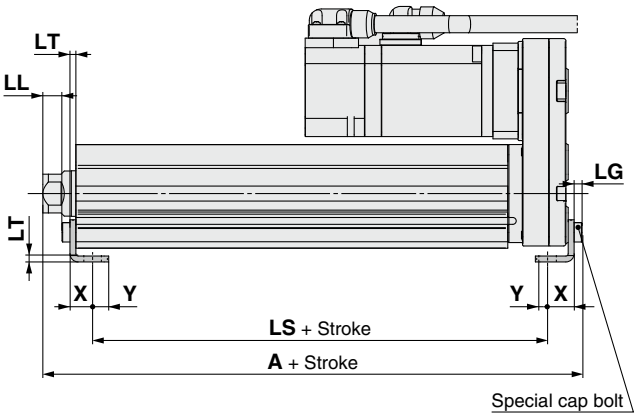

Outward mounting

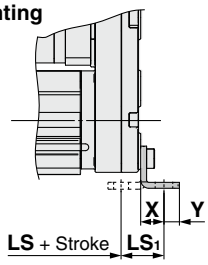

Foot Bracket

[mm]

Size	Stroke range [mm]	A	LS	LS_1	LL	LD	LG	LH	LT	LX	LY	LZ	X	Y
25	30 to 100	136.6	98.8	19.8	8.4	6.6	3.5	30	2.6	57	51.5	71	11.2	5.8
	105 to 400	161.6	123.8											
32	30 to 100	155.7	114	19.2	11.3	6.6	4	36	3.2	76	61.5	90	11.2	7
	105 to 500	185.7	144											
63	50 to 200	200.8	133.2	25.2	29.2	8.6	5	50	3.2	95	88	110	14.2	8
	205 to 500	235.8	168.2											
	505 to 800	270.8	203.2											

Material: Carbon steel (Chromating)
* The A measurement is when the unit is in the Z-phase first detecting position. At this position, 2 mm at the end (size 25, 32) and 4 mm at the end (size 63).
* When the motor mounting is the right or left side parallel type, the head side foot bracket should be mounted outward.

Dimensions

Rod flange: LEY 25/32/63 □□ A/B/C/L -□□□F

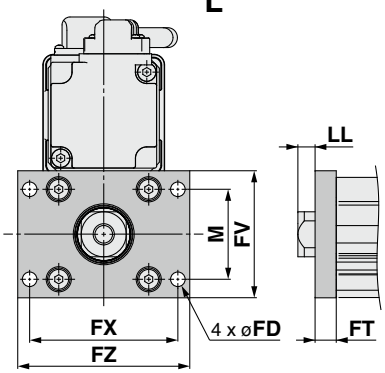

Head flange: LEY25□□ A/B/C -□□□G

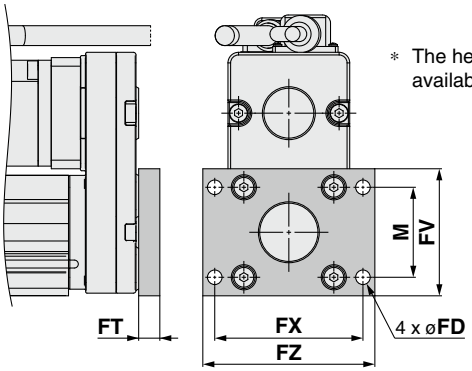

∗ The head flange type is not available for the LEY32/LEY63.

Included parts
- Flange
- Body mounting bolt

Rod/Head Flange [mm]

Size	FD	FT	FV	FX	FZ	LL	M
25	5.5	8	48	56	65	6.5	34
32	5.5	8	54	62	72	10.5	40
63	9	9	80	92	108	28.4	60

Material: Carbon steel (Nickel plating)
∗ The LL measurement is when the unit is in the Z-phase first detecting position. At this position, 2 mm at the end (size 25, 32) and 4 mm at the end (size 63).

Double clevis: LEY 25/32/63 □□ A/B/C/L -□□□D

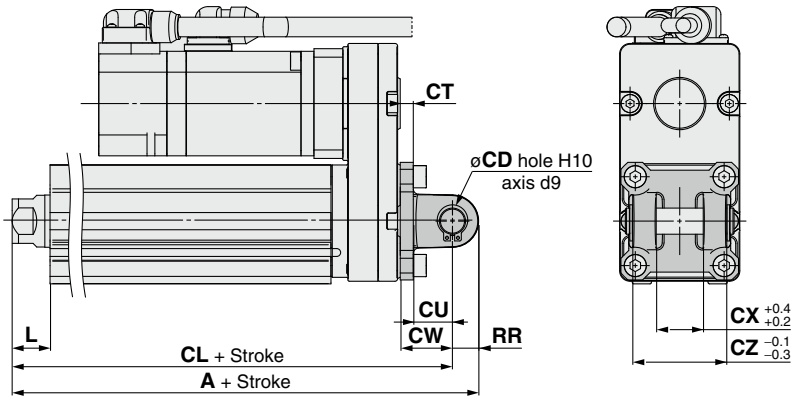

∗ Refer to pages 499 and 500 for details on the rod end nut and mounting bracket.

Included parts
- Double clevis
- Body mounting bolt
- Clevis pin
- Retaining ring

Double Clevis [mm]

Size	Stroke range [mm]	A	CL	CD	CT	CU	CW	CX	CZ	L	RR
25	30 to 100	160.5	150.5	10	5	14	20	18	36	14.5	10
	105 to 200	185.5	175.5								
32	30 to 100	180.5	170.5	10	6	14	22	18	36	18.5	10
	105 to 200	210.5	200.5								
63	50 to 200	236.6	222.6	14	8	22	30	22	44	37.4	14
	205 to 500	271.6	257.6	—	—						
	505 to 800	306.6	292.6	—	—						

Material: Cast iron (Coating)
∗ The A and CL measurements are when the unit is in the Z-phase first detecting position. At this position, 2 mm at the end (size 25, 32) and 4 mm at the end (size 63).

Electric Actuator Rod Type

LEY Series LEY100 Size 100

Refer to pages 433 to 439 for model selection.

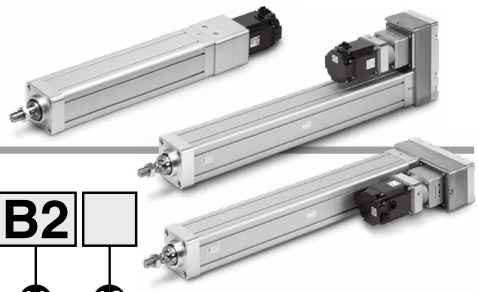

How to Order

LEY 100 D T9 B - 200 □ □ □ - S 2 B2 □

❶ ❷ ❸ ❹ ❺ ❻ ❼ ❽ ❾ ❿ ⓫ ⓬

❶ Size

100

❷ Motor mounting position

Nil	Top side parallel
R	Right side parallel
L	Left side parallel
D	In-line

❸ Motor type

Symbol	Type	Output [W]	Actuator size	Compatible drivers
T9	AC servo motor (Absolute encoder)	750	100	LECSB2-T9 LECSC2-T9 LECSS2-T9 LECSN2-T9(-□)

❹ Lead [mm]

Symbol	LEY100
B	10
D	3.33*1
L	2*2

*1 Screw lead 10 mm, reducer ratio [1/3]
*2 Screw lead 10 mm, reducer ratio [1/5]

❺ Stroke [mm]

100	100
to	to
1000	1000

* For details, refer to the applicable stroke table below.

❻ Motor option

Nil	Without option
B	With lock

❼ Rod end thread

Nil	Rod end female thread
M	Rod end male thread (1 rod end nut is included.)

❽ Mounting*1

Symbol	Type	Motor mounting position	
		Parallel	In-line
Nil	Ends tapped*2	●	●
L	Foot bracket (in-line)	—	●
H	Foot bracket	●	●
F	Rod flange*2	●	●
D	Double clevis*3	●	—

*1 The mounting bracket is shipped together with the product but does not come assembled.
*2 Do not mount using the "flange" or "ends tapped" options for the horizontal type with one end secured.
*3 Double clevis type: Use within the stroke limit of 400 or less and the thrust limit of 6000 or less.

❾ Cable type*1 *2

Nil	Without cable
S	Standard cable
R	Robotic cable (Flexible)

*1 A motor cable and encoder cable are included with the product. (A lock cable is also included if motor option "B: With lock" is selected.)
*2 Standard connector orientation of cable
·Top/parallel: "shaft side (A)"
·In-line: "opposite side (B)"
(Refer to page 1123 for details.)

❿ Cable length [m]*1

Nil	Without cable
2	2
5	5
A	10

*1 The length of the encoder, motor, and lock cables are the same.

⓫ Driver type*1

	Compatible drivers	Power supply voltage [V]
Nil	Without driver	
B2	**LECSB2-T9**/Pulse input (Absolute encoder)	200 to 240
C2	**LECSC2-T9**/CC-Link (Absolute encoder)	200 to 230
S2	**LECSS2-T9**/SSCNET/H (Absolute encoder)	200 to 240

*1 When a driver type is selected, a cable is included.
Select the cable type and cable length.
Example)
S2S2: Standard cable (2 m) + Driver (LECSS2)
S2: Standard cable (2 m)
Nil: Without cable and driver

⓬ I/O cable length [m]*1

Nil	Without cable
H	Without cable (Connector only)
1	1.5

*1 When "Nil: Without driver" is selected for the driver type, only "Nil: Without cable" can be selected.
Refer to page 1124 if an I/O cable is required.

Applicable Stroke Table

Size	Stroke [mm]										
	100	200	300	400	500	600	700	800	900	1000	Manufacturable stroke range
100	●	●	●	●	●	●	●	●	●	●	100 to 1000

* Please contact SMC for non-standard strokes as they are produced as special orders.

Specifications

Model			LEY100□L	LEY100□D	LEY100□B
Actuator specifications	Stroke [mm]*12		100, 200, 300, 400, 500, 600, 700, 800, 900, 1000		
	Work load [kg]	Horizontal*1	1200	1200	240
		Vertical	200	185	80
	Rated force [N]/Set value*2: 25%*3		5500	3300	1100
	Max. force [N]/Set value*2: 55%*3 *4		12000	7200	2600
	Max. speed [mm/s]*5	Stroke range: Up to 500	100	167	500
		600	74	123	370
		700	57	95	285
		800	45	75	225
		900	36	60	180
		1000	30	50	150
	Pushing speed [mm/s]*6		20 or less		
	Max. acceleration/deceleration [mm/s²]*7		2000	3000	
	Positioning repeatability [mm]		0.02		
	Lost motion [mm]*8		0.10		
	Screw lead [mm]		10		
	Reduction ratio		1/5	1/3	—
	Lead [mm]		2	3.3	10
	Impact/Vibration resistance [m/s²]*9		Motor mounting position: In-line 50/20, Motor mounting position: Parallel 50/15		
	Actuation type		Motor mounting position: In-line/Ball screw, Motor mounting position: Parallel/Ball screw + Belt		
	Guide type		Sliding bushing (Piston rod)		
	Operating temperature range [°C]		5 to 40		
	Operating humidity range [%RH]		90 or less (No condensation)		
	Enclosure		IP40		
Electric specifications	Motor output [W]/Size [mm]		750/□80		
	Motor type		AC servo motor (200 VAC)		
	Encoder		Absolute 22-bit encoder (Resolution: 4194304 p/rev) Absolute 18-bit encoder (Resolution: 262144 p/rev) (For LECSC-T□ only)		
	Power [W]*10		Max. power 1100		
Lock unit specifications	Type*11		Non-magnetizing lock		
	Holding force [N]		5700	3400	1200
	Power [W] at 20°C		10		
	Rated voltage [V]		24 VDC $^{0}_{-10\%}$		

*1 This is the max. value of the horizontal work load. An external guide is necessary to support the load (Friction coefficient of guide: 0.1 or less). The actual work load changes according to the condition of the external guide. Confirm the load using the actual device.
*2 Set values for the driver
*3 The force setting range (set values for the driver) for the force control with the torque control mode. The force and duty ratio change according to the set value. Set it while referencing the "Force Conversion Graph" on page 438 and the "Load–Acceleration/Deceleration Graph" on page 439.
The torque control mode is not available for the LECSC-T.
The drivers applicable to the pushing operation are "LECSB-T" and "LECSS-T."
The LECSB2-T is only applicable when the control method is positioning. The point table is used to set the pushing operation settings. To set the pushing operation settings, an additional dedicated file (pushing operation extension file) must be downloaded separately to be used with the setup software (MR Configurator2™: LEC-MRC2□). Please download this dedicated file from the SMC website: https://www.smcworld.com
When selecting the LECSS2-T, combine it with upper level equipment (such as the Simple Motion module manufactured by Mitsubishi Electric Corporation) which has a pushing operation function.
** For customer-provided PLC and motion controller setting and usage instructions, confirm with the retailer or manufacturer.
*4 The max. force changes according to the stroke. Check the "Force–Stroke Graph" on page 439.
For "double clevis type": Maximum thrust limited to 6000 or less
*5 The allowable speed changes according to the stroke. Set the number of rotations according to speed.
*6 The allowable collision speed for collision with the workpiece with the torque control mode
*7 The max. acceleration/deceleration changes according to the work load. Check the "Load–Acceleration/Deceleration Graph" on page 439.
*8 A reference value for correcting errors in reciprocal operation
*9 Impact resistance: No malfunction occurred when the actuator was tested with a drop tester in both an axial direction and a perpendicular direction to the lead screw. (The test was performed with the actuator in the initial state.)
Vibration resistance: No malfunction occurred in a test ranging between 45 to 2000 Hz. The test was performed in both an axial direction and a perpendicular direction to the lead screw. (The test was performed with the actuator in the initial state.)
*10 Indicates the max. power during operation (including the driver)
When selecting the power supply capacity, refer to the power supply capacity in the operation manual of each driver.
*11 Only when motor option "With lock" is selected
*12 For "double clevis type": Stroke limited to 400 or less.

Weight

Product Weight

[kg]

Series			LEY100DT8 (Motor mounting position: In-line)									
Stroke [mm]			100	200	300	400	500	600	700	800	900	1000
Lead	LEY100DT9B	With motor, Without reducer	12.7	14.4	16.0	17.7	19.3	21.0	22.6	24.2	25.9	27.5
	LEY100DT9(D/L)	With motor, With reducer	15.1	16.8	18.4	20.1	21.7	23.4	25.0	26.6	28.3	29.9

[kg]

Series			LEY100T8 (Motor mounting position: Parallel)									
Stroke [mm]			100	200	300	400	500	600	700	800	900	1000
Lead	LEY100T9B	With motor, Without reducer	14.5	16.1	17.8	19.4	21.1	22.7	24.4	26.0	27.7	29.3
	LEY100T9(D/L)	With motor, With reducer	16.9	18.5	20.2	21.8	23.5	25.1	26.8	28.4	30.1	31.7

Additional Weight

[kg]

Size		100
Motor option	With lock	1.0
Rod end thread	Male thread	0.1
	Nut	0.1
Mounting	Foot bracket (in-line)	0.8
	Foot bracket	1.4
	Flange	1.1
	Double clevis	1.3

Construction

In-line motor type: LEY100

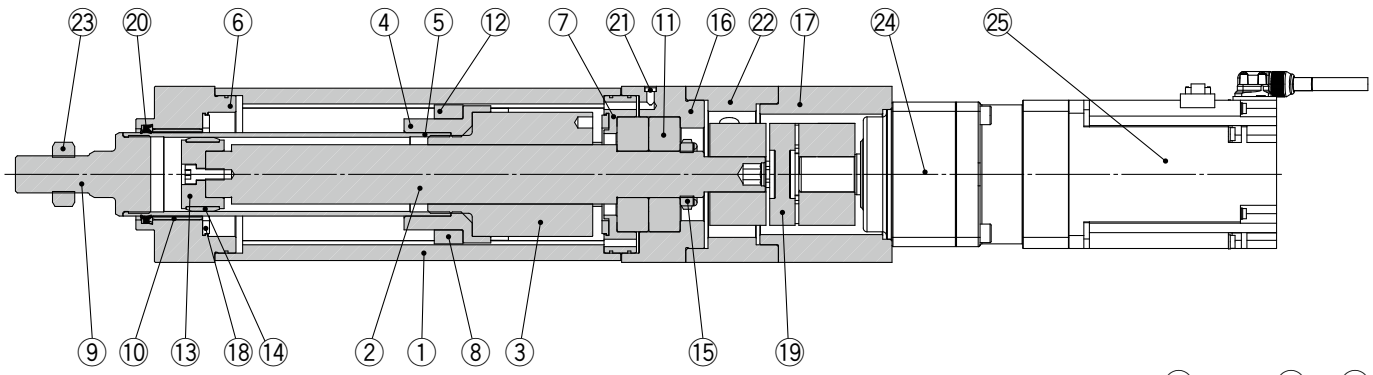

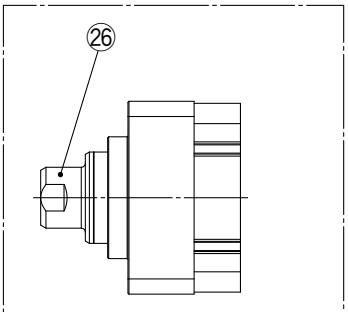

When the rod end female thread is selected

Top/Right/Left side parallel motor type: LEY100

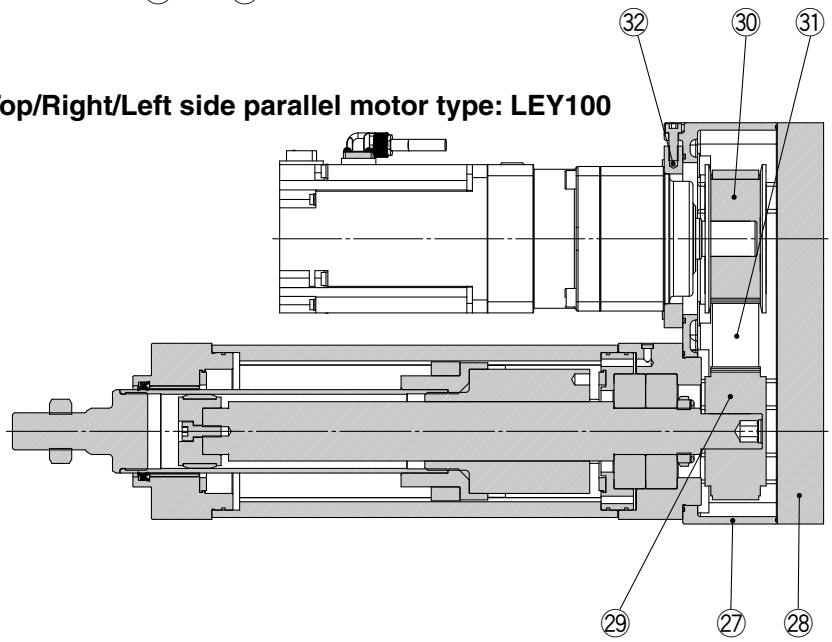

Component Parts

No.	Description	Material	Note
1	**Body**	Aluminum alloy	Anodized
2	**Screw shaft**	Alloy steel	
3	**Ball screw nut**	Alloy steel	
4	**Piston**	Aluminum alloy	
5	**Piston rod**	Alloy steel	Hard chrome plating
6	**Rod cover**	Aluminum alloy	Anodized
7	**Bearing holder**	Aluminum alloy	
8	**Rotation stopper**	Synthetic resin	
9	**Socket (Male thread)**	Alloy steel	Nickel plating
10	**Bushing**	Bearing alloy	
11	**Bearing**	—	
12	**Magnet**	—	
13	**Wear ring holder**	Aluminum alloy	
14	**Wear ring**	Synthetic resin	
15	**Lock nut**	Alloy steel	
16	**Motor block**	Aluminum alloy	Anodized

No.	Description	Material	Note
17	**Motor flange**	Aluminum alloy	Anodized
18	**Bumper**	Urethane	
19	**Coupling**	—	
20	**Scraper**	NBR	
21	**Sintered element**	Stainless steel	
22	**Motor adapter**	Aluminum alloy	Anodized
23	**Nut**	Alloy steel	Zinc chromating
24	**Reducer**	—	
25	**Motor**	—	
26	**Socket (Female thread)**	Alloy steel	Nickel plating
27	**Return box**	Aluminum die-cast	Coating
28	**Return plate**	Aluminum alloy	Anodized
29	**Screw shaft pulley**	Alloy steel	
30	**Motor pulley**	Alloy steel	
31	**Belt**	—	
32	**Motor adapter**	Aluminum alloy	Anodized

Replacement Parts/Grease Pack

Applied portion	Order no.
Piston rod	GR-S-010 (10 g)
	GR-S-020 (20 g)

Dimensions: In-line Motor

LEY100D□

Dimensions with ∗ indicate the dimensions when a male rod end is selected.

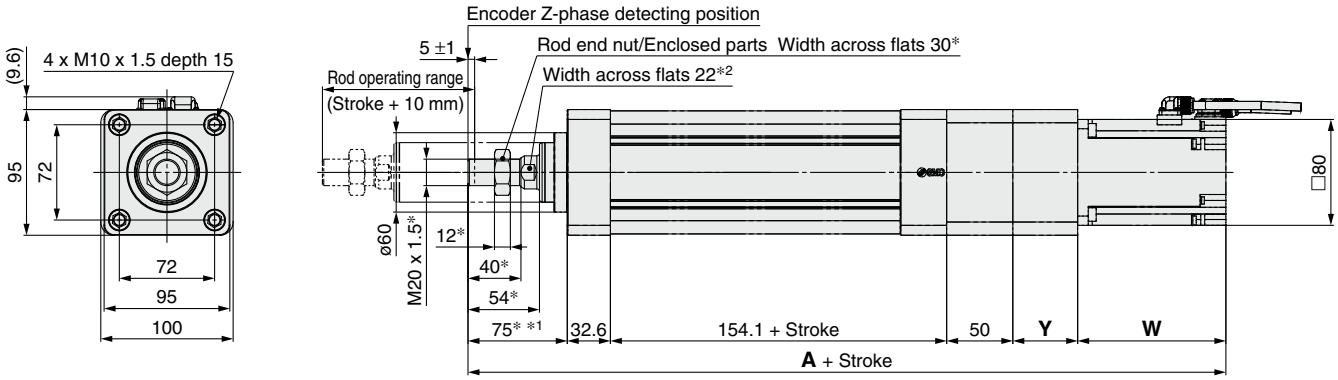

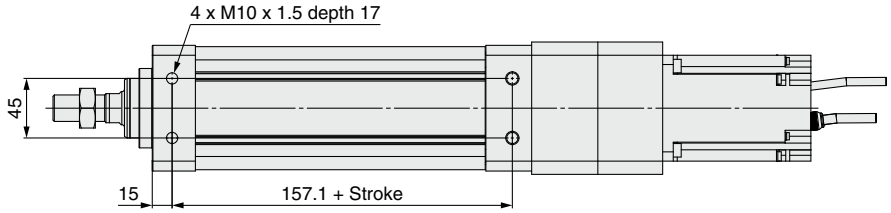

Rod end female thread: LEY100DT9□-□□□

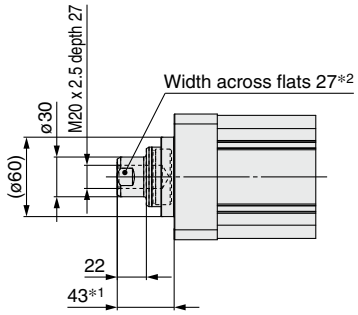

With reducer: LEY100DT9(D/L)-□□□□

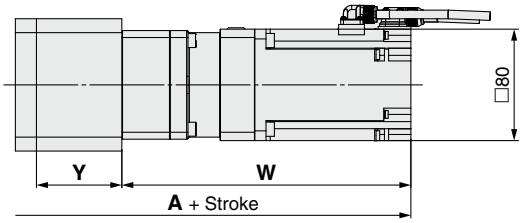

[mm]

Size	Stroke range [mm]	LEY100DT9B						LEY100DT9(D/L) [With reducer]					
		Without lock			With lock			Without lock			With lock		
		A	Y	W	A	Y	W	A	Y	W	A	Y	W
100	100 to 1000	472.7	49	112	513	49	152.3	580.5	61.3	207.5	620.8	61.3	247.8

Rod flange: LEY100DT9□-□□□F

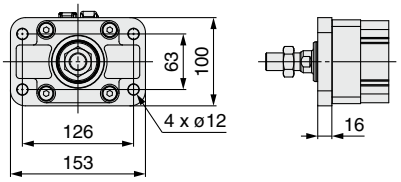

Included parts
· Flange
· Body mounting bolt

Foot bracket: LEY100DT9□-□□□L

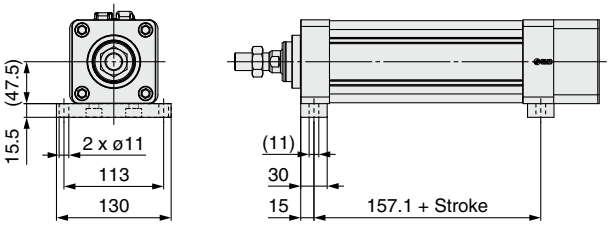

Included parts
· Mounting bracket (2 pcs.)
· Body mounting bolt

∗1 The dimension in the figure is the first Z-phase detecting position.
∗2 The orientation of the square-width width across flats at the end of the rod differs for each product.

Dimensions: Top/Right/Left Side Parallel Motor

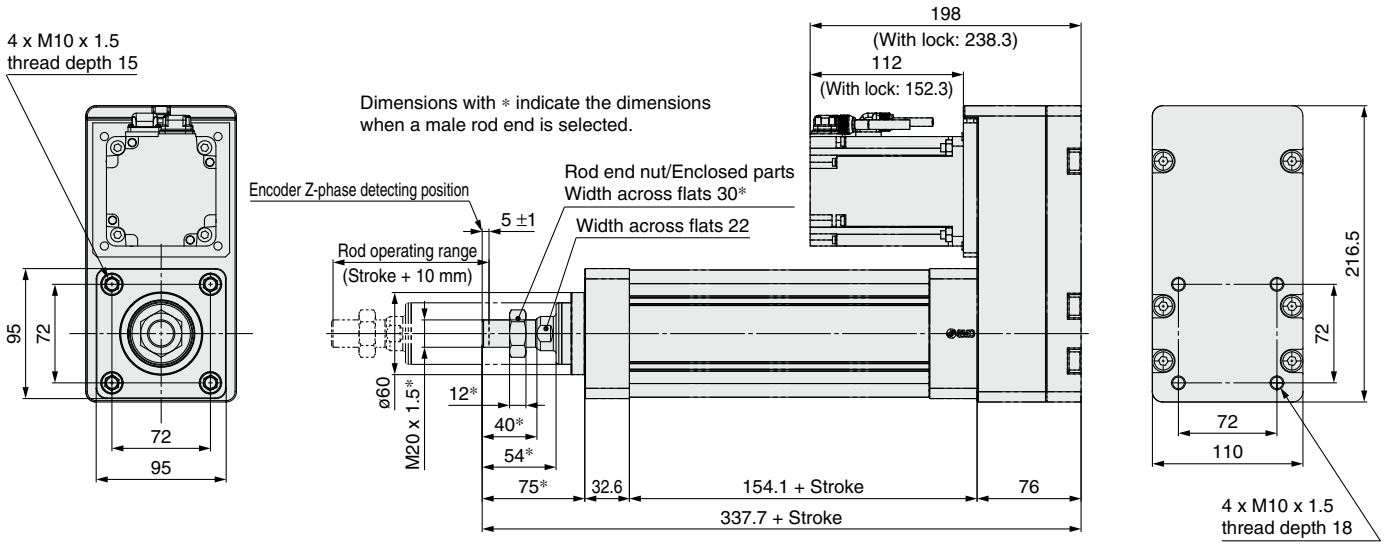

Rod end female thread: LEY100T9□-□□□

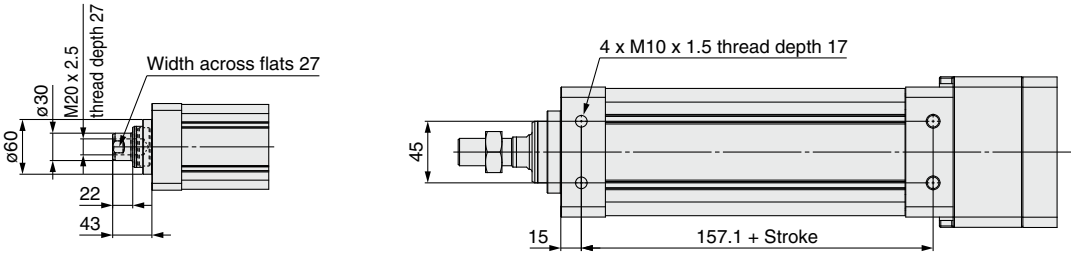

With reducer: LEY100T9(D/L)-□□□□

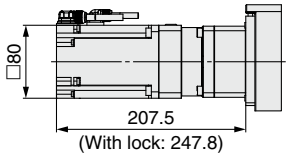

Motor mounting position

Left side parallel **Right side parallel**

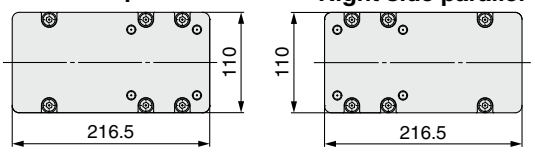

Dimensions: Top/Right/Left Side Parallel Motor

Double clevis: LEY100T9□-□□□D

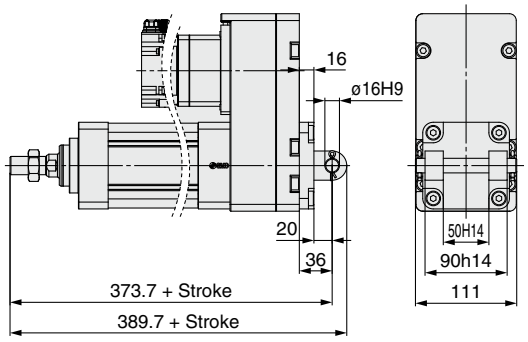

Rod flange: LEY100T9□-□□□F

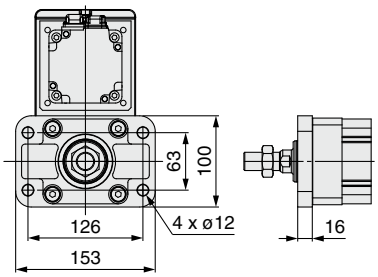

Foot bracket: LEY100T9□-□□□H

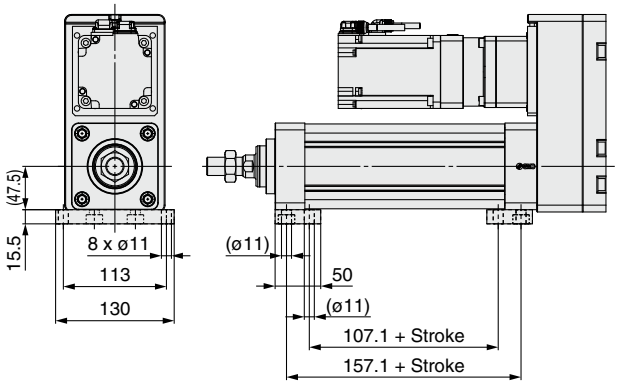

AC Servo Motor **LECY□ Series**

Rod Type

Dust-tight/Water-jet-proof (IP65 Equivalent)

∗ Option

LEY Series LEY25, 32, 63

LECS□ Series ▸p. 473, 485 Dust-tight/Water-jet-proof ▸p. 931 Secondary Battery Compatible ▸p. 989

How to Order

LEY H 25 □ V6 B – 200 □ □ □ □ – S 3 M2 □

❶ ❷ ❸ ❹ ❺ ❻ ❼ ❽ ❾ ❿ ⓫ ⓬ ⓭ ⓮

❶ Accuracy

Nil	Basic type
H	High-precision type

❷ Size

25
32
63

❸ Motor mounting position

Nil	Top side parallel
R	Right side parallel
L	Left side parallel
D	In-line

❹ Motor type

Symbol	Type	Output [W]	❷ Size	⓭ Driver type	Compatible drivers
V6∗1	AC servo motor (Absolute encoder)	100	25	M2	LECYM2-V5
				U2	LECYU2-V5
V7		200	32	M2	LECYM2-V7
				U2	LECYU2-V7
V8		400	63	M2	LECYM2-V8
				U2	LECYU2-V8

∗1 For motor type V6, the compatible driver part number suffix is V5.

❺ Lead [mm]

Symbol	LEY25	LEY32∗1	LEY63
A	12	16 (20)	20
B	6	8 (10)	10
C	3	4 (5)	5
L	—	—	2.86∗2

∗1 The values shown in ( ) are the leads for the top/right/left side parallel motor types. (Equivalent leads which include the pulley ratio [1.25:1])

∗2 Only available for top/right/left side parallel motor types (Equivalent leads which include the pulley ratio [4:7])

❻ Stroke [mm]

30	30
to	to
800	800

∗ For details, refer to the applicable stroke table below.

❼ Dust-tight/Water-jet-proof (Only available for LEY63)

Symbol	LEY25/32	LEY63
Nil	IP4x equivalent	IP5x equivalent (Dust-protected)
P	—	IP65 equivalent (Dust-tight/Water-jet-proof)/With vent hole tap

∗ When using the dust-tight/water-jet-proof (IP65 equivalent), correctly mount the fitting and tubing to the vent hole tap, and then place the end of the tubing in an area not exposed to dust or water.

∗ The fitting and tubing should be provided separately by the customer. Select [Applicable tubing O.D.: ø4 or more, Connection thread: Rc1/8].

∗ Cannot be used in environments exposed to cutting oil, etc. Take appropriate protective measures. For details on enclosure, refer to the "Enclosure" on page 577.

❽ Motor option

Nil	Without option
B	With lock

∗ When "With lock" is selected for the top/right/left side parallel motor types, the motor body will stick out from the end of the body for size 25 with strokes of 30 mm or less.
Check for interference with workpieces before selecting a model.

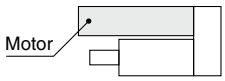

❾ Rod end thread

Nil	Rod end female thread
M	Rod end male thread (1 rod end nut is included.)

Applicable Stroke Table

●: Standard

Model \ Stroke [mm]	30	50	100	150	200	250	300	350	400	450	500	600	700	800	Manufacturable stroke range
LEY25	●	●	●	●	●	●	●	●	●	—	—	—	—	—	15 to 400
LEY32	●	●	●	●	●	●	●	●	●	●	●	—	—	—	20 to 500
LEY63	—	●	●	●	●	●	●	●	●	●	●	●	●	●	50 to 800

∗ Please contact SMC for non-standard strokes as they are produced as special orders.

For auto switches, refer to pages 502 to 505.

Motor mounting position: Parallel

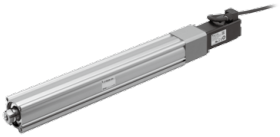

Motor mounting position: In-line

⑩ Mounting*1

Symbol	Type	Motor mounting position	
		Parallel	In-line
Nil	Ends tapped/ Body bottom tapped*2	●	●
L	Foot bracket	●	—
F	Rod flange*2	●*4	●
G	Head flange*2	●*5	—
D	Double clevis*3	●	—

*1 The mounting bracket is shipped together with the product but does not come assembled.
*2 For the horizontal cantilever mounting of the ends tapped, rod flange, or head flange types, use the actuator within the following stroke range.
· LEY25: 200 mm or less · LEY32: 100 mm or less · LEY63: 400 mm or less
*3 For the mounting of the double clevis type, use the actuator within the following stroke range.
· LEY25: 200 mm or less · LEY32: 200 mm or less · LEY63: 300 mm or less
*4 The rod flange type is not available for the LEY25 with a 30 mm stroke and motor option "With lock."
*5 The head flange type is not available for the LEY32/LEY63.

⑪ Cable type*1

Nil	Without cable
S	Standard cable
R	Robotic cable

*1 A motor cable and encoder cable are included with the product.
The motor cable for lock option is included when the motor with lock option is selected.

⑫ Cable length [m]*1

Nil	Without cable
3	3
5	5
A	10
C	20

*1 The length of the motor and encoder cables are the same. (For with lock)

⑬ Driver type

	Compatible drivers	Power supply voltage [V]
Nil	Without driver	—
M2	LECYM2-V□	200 to 230
U2	LECYU2-V□	200 to 230

* When a driver type is selected, a cable is included. Select the cable type and cable length.

⑭ I/O cable length [m]*1

Nil	Without cable
H	Without cable (Connector only)
1	1.5

*1 When "Nil: Without driver" is selected for the driver type, only "Nil: Without cable" can be selected.
Refer to page 1135 if an I/O cable is required.
(Options are shown on page 1135.)

Compatible Drivers

Driver type	MECHATROLINK-Ⅱ type	MECHATROLINK-Ⅲ type
Series	**LECYM**	**LECYU**
Applicable network	MECHATROLINK-Ⅱ	MECHATROLINK-Ⅲ
Control encoder	Absolute 20-bit encoder	
Communication device	USB communication, RS-422 communication	
Power supply voltage [V]	200 to 230 VAC (50/60 Hz)	
Reference page	1128	

Specifications

	Model		LEY25V6 (Parallel)/LEY25DV6 (In-line)			LEY32V7 (Parallel)			LEY32DV7 (In-line)		
Actuator specifications	Work load [kg]	Horizontal*1	18	50	50	30	60	60	30	60	60
		Vertical	8	16	30	9	19	37	12	24	46
	Force [N]*2 (Set value: 45 to 90%)		65 to 131	127 to 255	242 to 485	79 to 157	154 to 308	294 to 588	98 to 197	192 to 385	368 to 736
	Max.*3 speed [mm/s]	Stroke range: Up to 300	900	450	225	1200	600	300	1000	500	250
		Stroke range: 305 to 400	600	300	150						
		Stroke range: 405 to 500	—	—	—	800	400	200	640	320	160
	Pushing speed [mm/s]*4		35 or less			30 or less			30 or less		
	Max. acceleration/deceleration [mm/s²]		5000			5000					
	Positioning repeatability [mm]	Basic type	±0.02			±0.02					
		High-precision type	±0.01			±0.01					
	Lost motion*5 [mm]	Basic type	0.1 or less			0.1 or less					
		High-precision type	0.05 or less			0.05 or less					
	Lead [mm] (including pulley ratio)		12	6	3	20	10	5	16	8	4
	Impact/Vibration resistance [m/s²]*6		50/20			50/20					
	Actuation type		Ball screw + Belt (LEY□)/Ball screw (LEY□D)			Ball screw + Belt [1.25:1]			Ball screw		
	Guide type		Sliding bushing (Piston rod)			Sliding bushing (Piston rod)					
	Operating temperature range [°C]		5 to 40			5 to 40					
	Operating humidity range [%RH]		90 or less (No condensation)			90 or less (No condensation)					
	Enclosure		IP40								
	Required conditions for the regenerative resistor*7 [kg]	Horizontal	Not required			Not required					
		Vertical	6 or more			4 or more					
Electric specifications	Motor output/Size		100 W/□40			200 W/□60					
	Motor type		AC servo motor (200 VAC)			AC servo motor (200 VAC)					
	Encoder		Absolute 20-bit encoder (Resolution: 1048576 p/rev)								
	Power [W]*8		Max. power 445			Max. power 724			Max. power 724		
Lock unit specifications	Type*9		Non-magnetizing lock								
	Holding force [N]		131	255	485	157	308	588	197	385	736
	Power [W] at 20°C		5.5			6			6		
	Rated voltage [V]		24 VDC $^{+10\%}_{0}$								

*1 This is the max. value of the horizontal work load. An external guide is necessary to support the load (Friction coefficient of guide: 0.1 or less). The actual work load changes according to the condition of the external guide. Confirm the load using the actual device.
*2 The force setting range (set values for the driver) for the force control with the torque control mode. Set it while referencing the "Force Conversion Graph (Guide)" on page 445.
*3 The allowable speed changes according to the stroke.
*4 The allowable collision speed for collision with the workpiece with the torque control mode
*5 A reference value for correcting errors in reciprocal operation
*6 Impact resistance: No malfunction occurred when the actuator was tested with a drop tester in both an axial direction and a perpendicular direction to the lead screw. (The test was performed with the actuator in the initial state.)
Vibration resistance: No malfunction occurred in a test ranging between 45 to 2000 Hz. The test was performed in both an axial direction and a perpendicular direction to the lead screw. (The test was performed with the actuator in the initial state.)
*7 The work load conditions which require the regenerative resistor when operating at the max. speed (Duty ratio: 100%). Order the regenerative resistor separately. For details, refer to the "Required Conditions for the Regenerative Resistor (Guide)" on pages 443 and 444.
*8 Indicates the max. power during operation (including the driver)
When selecting the power supply capacity, refer to the power supply capacity in the operation manual of each driver.
*9 Only when motor option "With lock" is selected

Weight

Product Weight

[kg]

Series	LEY25V6 (Motor mounting position: Parallel)									LEY32V7 (Motor mounting position: Parallel)									
Stroke [mm]	30	50	100	150	200	250	300	350	400	30	50	100	150	200	250	300	350	400	450	500
Weight [kg]	1.2	1.3	1.6	1.7	1.9	2.1	2.2	2.4	2.6	2.3	2.4	2.7	3.2	3.5	3.8	4.0	4.3	4.6	4.9	5.2

Series	LEY25DV6 (Motor mounting position: In-line)									LEY32DV7 (Motor mounting position: In-line)									
Stroke [mm]	30	50	100	150	200	250	300	350	400	30	50	100	150	200	250	300	350	400	450	500
Weight [kg]	1.2	1.3	1.5	1.7	1.9	2.1	2.3	2.4	2.6	2.3	2.4	2.7	3.2	3.5	3.8	4.1	4.3	4.6	4.9	5.2

Additional Weight

[kg]

Size		25	32
Lock		0.30	0.60
Rod end male thread	Male thread	0.03	0.03
	Nut	0.02	0.02
Foot bracket (2 sets including mounting bolt)		0.08	0.14
Rod flange (including mounting bolt)		0.17	0.20
Head flange (including mounting bolt)			
Double clevis (including pin, retaining ring, and mounting bolt)		0.16	0.22

Specifications

	Model			LEY63V8 (Parallel)				LEY63DV8 (In-line)		
Actuator specifications	Work load [kg]		Horizontal*1	40	70	80	200	40	70	80
			Vertical	19	38	72	115	19	38	72
	Force [N]/Set value*2 : 45 to 150%*3			156 to 521	304 to 1012	573 to 1910	1003 to 3343	156 to 521	304 to 1012	573 to 1910
	Max. speed*4 [mm/s]	Stroke range	Up to 500	1000	500	250	70	1000	500	250
			505 to 600	800	400	200		800	400	200
			605 to 700	600	300	150		600	300	150
			705 to 800	500	250	125		500	250	125
	Pushing speed [mm/s]*5			30 or less						
	Max. acceleration/deceleration [mm/s²]			5000			3000	5000		
	Positioning repeatability [mm]		Basic type	±0.02						
			High-precision type	±0.01						
	Lost motion [mm]*6		Basic type	0.1 or less						
			High-precision type	0.05 or less						
	Screw lead [mm] (including pulley ratio)			20	10	5	5 (2.86)	20	10	5
	Impact/Vibration resistance [m/s²]*7			50/20						
	Actuation type			Ball screw			Ball screw + Belt (Pulley ratio 4:7)	Ball screw		
	Guide type			Sliding bushing (Piston rod)						
	Operating temperature range [°C]			5 to 40						
	Operating humidity range [%RH]			90 or less (No condensation)						
	Enclosure			IP40						
	Required conditions for the regenerative resistor*8 [kg]		Horizontal	Not required						
			Vertical	2.5 or more						
Electric specifications	Motor output/Size			400 W/□60						
	Motor type			AC servo motor (200 VAC)						
	Encoder			Absolute 20-bit encoder (Resolution: 1048576 p/rev)						
	Power [W]*9			Max. power 1275						
Lock unit specifications	Type*10			Non-magnetizing lock						
	Holding force [N]			313	607	1146	2006	313	607	1146
	Power [W] at 20°C			6						
	Rated voltage [V]			24 VDC $^{+10\%}_{0}$						

*1 This is the max. value of the horizontal work load. An external guide is necessary to support the load (Friction coefficient of guide: 0.1 or less). The actual work load changes according to the condition of the external guide. Confirm the load using the actual device.
*2 Set values for the driver
*3 The force setting range (set values for the driver) for the force control with the torque control mode. The force and duty ratio change according to the set value. Set it while referencing the "Force Conversion Graph (Guide)" on page 445.
*4 The allowable speed changes according to the stroke.
*5 The allowable collision speed for collision with the workpiece with the torque control mode
*6 A reference value for correcting errors in reciprocal operation
*7 Impact resistance: No malfunction occurred when the actuator was tested with a drop tester in both an axial direction and a perpendicular direction to the lead screw. (The test was performed with the actuator in the initial state.)
Vibration resistance: No malfunction occurred in a test ranging between 45 to 2000 Hz. The test was performed in both an axial direction and a perpendicular direction to the lead screw. (The test was performed with the actuator in the initial state.)
*8 The work load conditions which require the regenerative resistor when operating at the max. speed (Duty ratio: 100%)
*9 Indicates the max. power during operation (including the driver)
When selecting the power supply capacity, refer to the power supply capacity in the operation manual of each driver.
*10 Only when motor option "With lock" is selected

Weight

Product Weight

[kg]

Series	LEY63V8 (Motor mounting position: Parallel)												
Stroke [mm]	50	100	150	200	250	300	350	400	450	500	600	700	800
Weight [kg]	4.8	5.3	6.0	6.5	7.7	8.2	8.8	9.3	9.9	10.4	12.1	13.3	14.4

Series	LEY63DV8 (Motor mounting position: In-line)												
Stroke [mm]	50	100	150	200	250	300	350	400	450	500	600	700	800
Weight [kg]	5.0	5.5	6.1	6.6	7.8	8.3	9.0	9.5	10.1	10.6	12.3	13.4	14.6

Additional Weight

[kg]

Size		63
Lock		0.6
Rod end male thread	Male thread	0.12
	Nut	0.04
Foot bracket (2 sets including mounting bolt)		0.26
Rod flange (including mounting bolt)		0.51
Double clevis (including pin, retaining ring, and mounting bolt)		0.58

Construction

Top side parallel motor type: LEY25/32/63

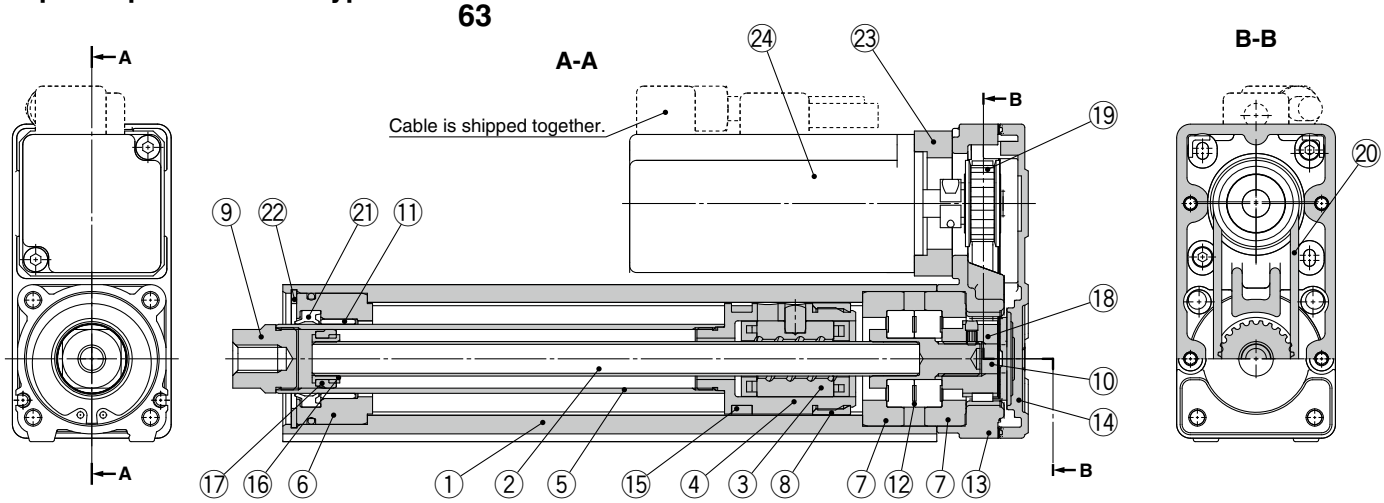

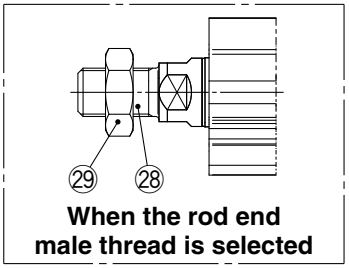

In-line motor type: LEY25/32/63D

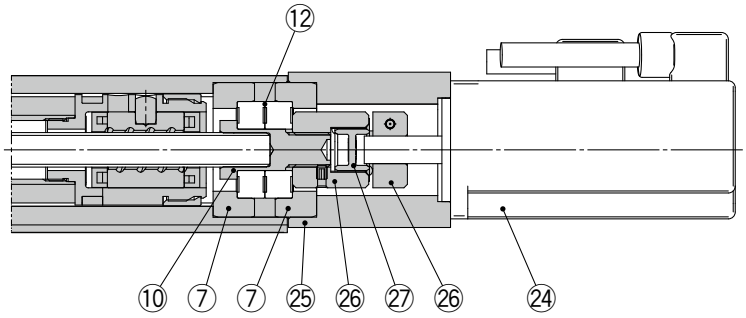

Component Parts

No.	Description	Material	Note
1	**Body**	Aluminum alloy	Anodized
2	**Ball screw shaft**	Alloy steel	
3	**Ball screw nut**	Synthetic resin/Alloy steel	
4	**Piston**	Aluminum alloy	
5	**Piston rod**	Stainless steel	Hard chrome plating
6	**Rod cover**	Aluminum alloy	
7	**Bearing holder**	Aluminum alloy	
8	**Rotation stopper**	Synthetic resin	
9	**Socket**	Free cutting carbon steel	Nickel plating
10	**Connected shaft**	Free cutting carbon steel	Nickel plating
11	**Bushing**	Bearing alloy	
12	**Bearing**	—	
13	**Return box**	Aluminum die-cast	Coating
14	**Return plate**	Aluminum die-cast	Coating
15	**Magnet**	—	
16	**Wear ring holder**	Stainless steel	Stroke 101 mm or more
17	**Wear ring**	Synthetic resin	Stroke 101 mm or more
18	**Screw shaft pulley**	Aluminum alloy	
19	**Motor pulley**	Aluminum alloy	
20	**Belt**	—	

No.	Description	Material	Note
21	**Seal**	NBR	
22	**Retaining ring**	Steel for spring	Phosphate coating
23	**Motor adapter**	Aluminum alloy	Coating
24	**Motor**	—	
25	**Motor block**	Aluminum alloy	Coating
26	**Hub**	Aluminum alloy	
27	**Spider**	Urethane	
28	**Socket (Male thread)**	Free cutting carbon steel	Nickel plating
29	**Nut**	Alloy steel	Zinc chromating

Replacement Parts (Top/Right/Left side parallel only)/Belt

No.	Size	Order no.
20	25	LE-D-2-2
	32	LE-D-2-4

No.	Size	Lead	Order no.
20	63	A/B/C	LE-D-2-5
		L	LE-D-2-6

Replacement Parts/Grease Pack

Applied portion	Order no.
Piston rod	GR-S-010 (10 g) GR-S-020 (20 g)

Dimensions: Top/Right/Left Side Parallel Motor

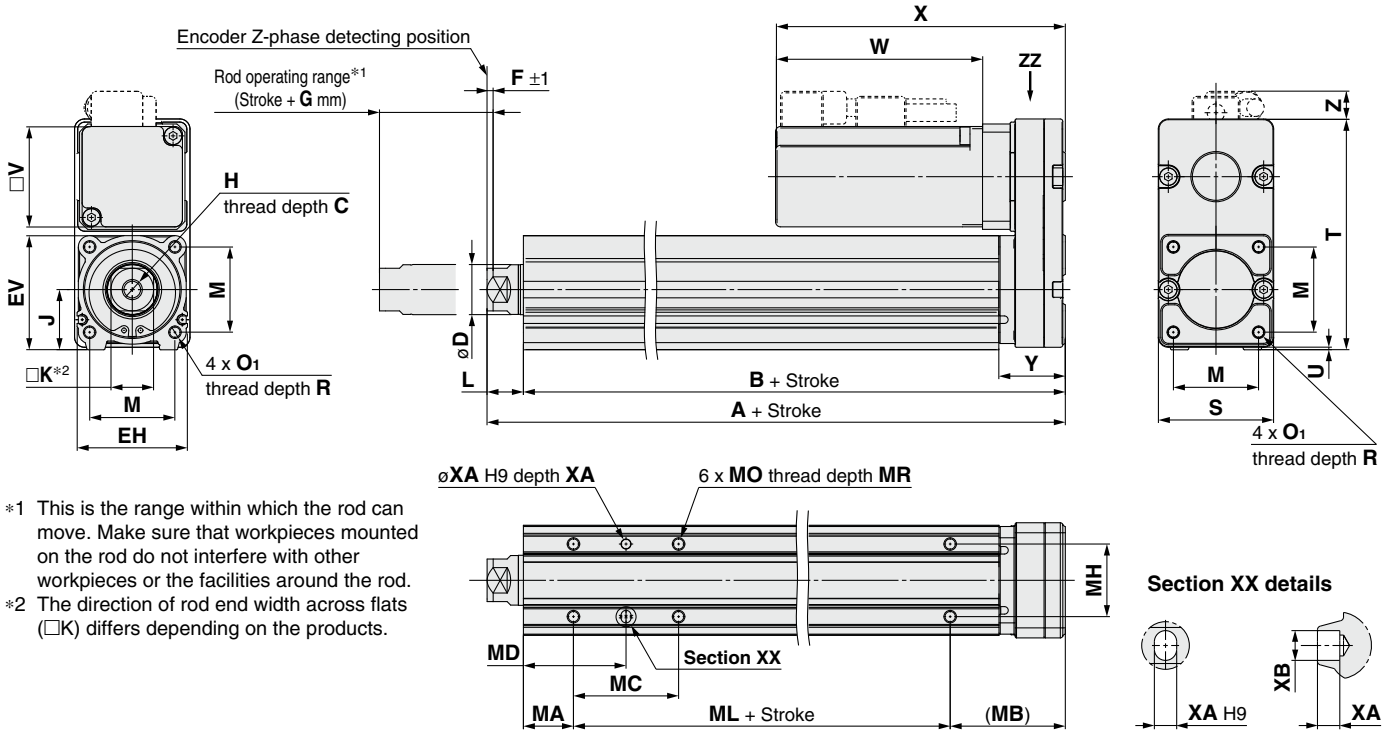

*1 This is the range within which the rod can move. Make sure that workpieces mounted on the rod do not interfere with other workpieces or the facilities around the rod.
*2 The direction of rod end width across flats (□K) differs depending on the products.

IP65 equivalent (Dust-tight/Water-jet-proof): LEY63□□□-□P

(View ZZ)

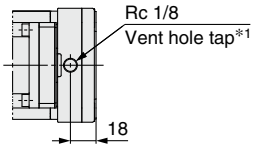

*1 When using the dust-tight/water-jet-proof (IP65 equivalent), correctly mount the fitting and tubing to the vent hole tap, and then place the end of the tubing in an area not exposed to dust or water. The fitting and tubing should be provided separately by the customer.
Select [Applicable tubing O.D.: ø4 or more, Connection thread: Rc1/8].

[mm]

Size	Stroke range [mm]	A	B	C	D	EH	EV	H	J	K	L	M	O1	R	S	T	U	Y	V
25	30 to 100	130.5	116	13	20	44	45.5	M8 x 1.25	24	17	14.5	34	M5 x 0.8	8	46	92	1	26.5	40
	105 to 400	155.5	141																
32	30 to 100	148.5	130	13	25	51	56.5	M8 x 1.25	31	22	18.5	40	M6 x 1.0	10	60	118	1	34	60
	105 to 500	178.5	160																
63	50 to 200	192.6	155.2	21	40	76	82	M16 x 2	44	36	37.4	60	M8 x 1.25	16	80	146	4	32.2	60
	205 to 500	227.6	190.2																
	505 to 800	262.6	225.2																

Size	Stroke range [mm]	Without lock			With lock			F	G
		W	X	Z	W	X	Z		
25	30 to 100	82.5	115.5	11	127.5	160.5	11	2	4
	105 to 400								
32	30 to 100	80	120	14	120	160	14	2	4
	105 to 500								
63	50 to 200	98.5	138.5	12.5 (13.5)*1	138.5	178.5	12.5 (13.5)*1	4	8
	205 to 500								
	505 to 800								

*1 L lead

Body Bottom Tapped

[mm]

Size	Stroke range [mm]	MA	MB	MC	MD	MH	ML	MO	MR	XA	XB
25	30 to 35	20	46	24	32	29	50	M5 x 0.8	6.5	4	5
	40 to 100			42	41						
	105 to 120						75				
	125 to 200			59	49.5						
	205 to 400			76	58						
32	30 to 35	25	55	22	36	30	50	M6 x 1	8.5	5	6
	40 to 100			36	43						
	105 to 120						80				
	125 to 200			53	51.5						
	205 to 500			70	60						
63	50 to 70	38	52.2	24	50	44	65	M8 x 1.25	10	6	7
	75 to 120			45	60.5						
	125 to 200			58	67						
	205 to 500			86	81		100				
	505 to 800						135				

Dimensions: Top/Right/Left Side Parallel Motor

Left side parallel motor type: LEY 25/32/63 L

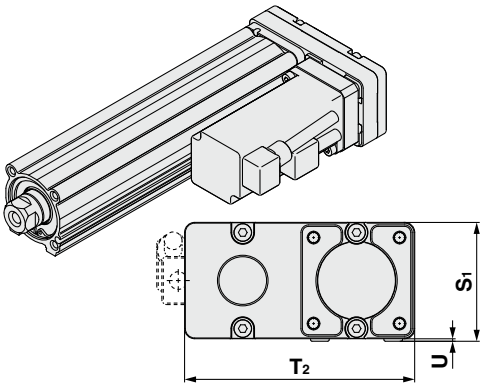

Right side parallel motor type: LEY 25/32/63 R

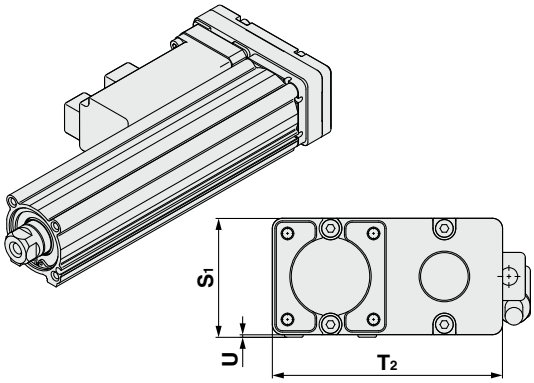

[mm]

Size	S_1	T_2	U
25	47	91	1
32	61	117	1
63	84	142	4

∗ When the motor is mounted on the left or right side in parallel, the groove for auto switch on the side to which the motor is mounted is hidden.

Dimensions: In-line Motor

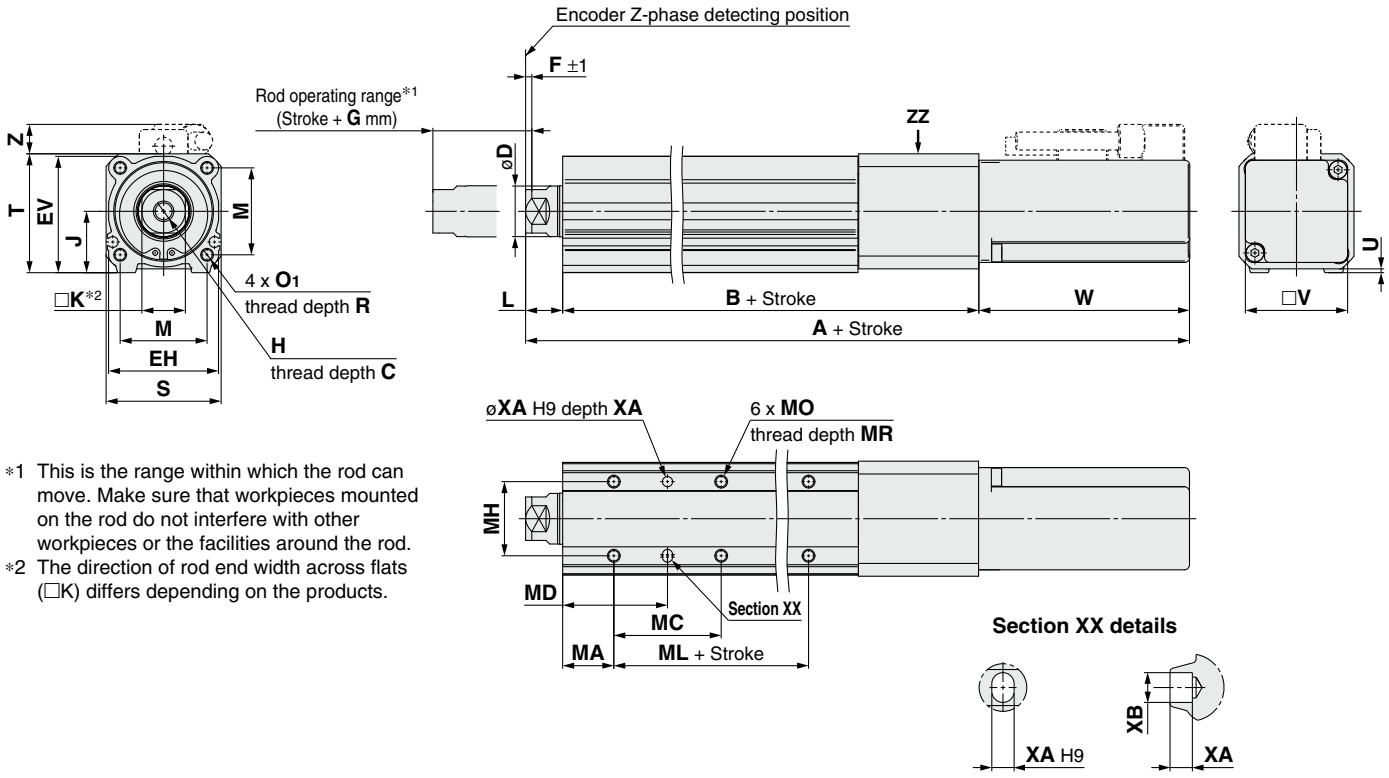

*1 This is the range within which the rod can move. Make sure that workpieces mounted on the rod do not interfere with other workpieces or the facilities around the rod.
*2 The direction of rod end width across flats (□K) differs depending on the products.

[mm]

Size	Stroke range [mm]	B	C	D	EH	EV	H	J	K	L	M	O1	R	S	T	U	V
25	30 to 100	136.5	13	20	44	45.5	M8 x 1.25	24	17	14.5	34	M5 x 0.8	8	45	46.5	1.5	40
	105 to 400	161.5															
32	30 to 100	156	13	25	51	56.5	M8 x 1.25	31	22	18.5	40	M6 x 1.0	10	60	61	1	60
	105 to 500	186															
63	50 to 200	190.7	21	40	76	82	M16 x 2	44	36	37.4	60	M8 x 1.25	16	78	83	5	60
	205 to 500	225.7															
	505 to 800	260.7															

Size	Stroke range [mm]	Without lock			With lock			F	G
		A	W	Z	A	W	Z		
25	30 to 100	233.5	82.5	11.5	278.5	127.5	11.5	2	4
	105 to 400	258.5			303.5				
32	30 to 100	254.5	80	14	294.5	120	14	2	4
	105 to 500	284.5			324.5				
63	50 to 200	326.6	98.5	5	366.6	138.5	5	4	8
	205 to 500	361.6			401.6				
	505 to 800	396.6			436.6				

Body Bottom Tapped

[mm]

Size	Stroke range [mm]	MA	MC	MD	MH	ML	MO	MR	XA	XB
25	30 to 35	20	24	32	29	50	M5 x 0.8	6.5	4	5
	40 to 100		42	41						
	105 to 120									
	125 to 200		59	49.5		75				
	205 to 400		76	58						
32	30 to 35	25	22	36	30	50	M6 x 1	8.5	5	6
	40 to 100		36	43						
	105 to 120					80				
	125 to 200		53	51.5						
	205 to 500		70	60						
63	50 to 70	38	24	50	44	65	M8 x 1.25	10	6	7
	75 to 120		45	60.5						
	125 to 200		58	67						
	205 to 500		86	81		100				
	505 to 800					135				

IP65 equivalent (Dust-tight/Water-jet-proof): LEY63D□□-□P (View ZZ)

∗ **LEY63 only**

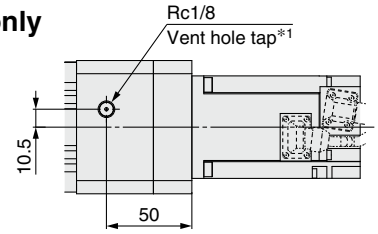

*1 When using the dust-tight/water-jet-proof (IP65 equivalent), correctly mount the fitting and tubing to the vent hole tap, and then place the end of the tubing in an area not exposed to dust or water. The fitting and tubing should be provided separately by the customer.
Select [Applicable tubing O.D.: ø4 or more, Connection thread: Rc1/8].

Dimensions

End male thread: LEY 25/32/63 □□ A/B/C/L -□□M

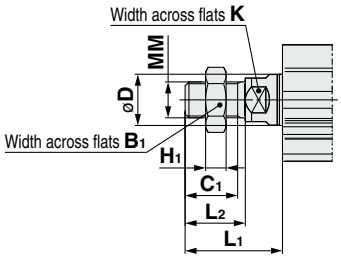

∗ Refer to pages 499 and 500 for details on the rod end nut and mounting bracket.
∗ Refer to the "Handling" precautions on pages 574 to 577 when mounting end brackets such as knuckle joint or workpieces.

[mm]

Size	B_1	C_1	D	H_1	K	L_1∗1	L_2	MM
25	22	20.5	20	8	17	38	23.5	M14 x 1.5
32	22	20.5	25	8	22	42.0	23.5	M14 x 1.5
63	27	26	40	11	36	76.4	39	M18 x 1.5

∗1 The L_1 measurement is when the unit is in the Z-phase first detecting position. At this position, 2 mm at the end (size 25, 32) and 4 mm at the end (size 63).

Foot bracket: LEY 25/32/63 □□ A/B/C/L -□□□L

Included parts
·Foot bracket
·Body mounting bolt

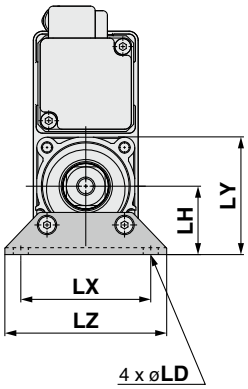

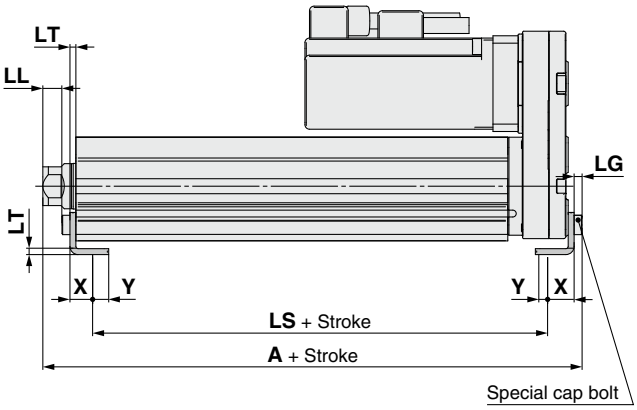

Outward mounting

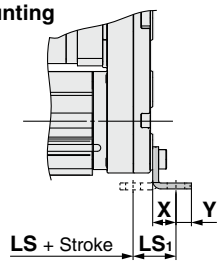

Foot Bracket

[mm]

Size	Stroke range [mm]	A	LS	LS_1	LL	LD	LG	LH	LT	LX	LY	LZ	X	Y
25	30 to 100	136.6	98.8	19.8	8.4	6.6	3.5	30	2.6	57	51.5	71	11.2	5.8
	105 to 400	161.6	123.8											
32	30 to 100	155.7	114	19.2	11.3	6.6	4	36	3.2	76	61.5	90	11.2	7
	105 to 500	185.7	144											
63	50 to 200	200.8	133.2	25.2	29.2	8.6	5	50	3.2	95	88	110	14.2	8
	205 to 500	235.8	168.2											
	505 to 800	270.8	203.2											

Material: Carbon steel (Chromating)
∗ The A measurement is when the unit is in the Z-phase first detecting position. At this position, 2 mm at the end (size 25, 32) and 4 mm at the end (size 63).
∗ When the motor mounting is the right or left side parallel type, the head side foot bracket should be mounted outward.

Dimensions

Rod flange: LEY 25/32/63 □□ A/B/C/L -□□□F

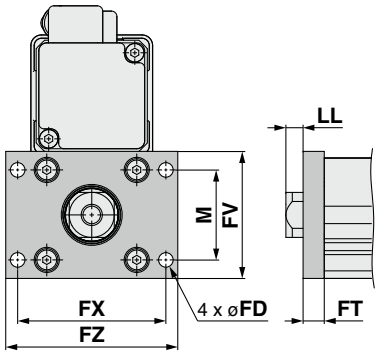

Head flange: LEY25□□ A/B/C -□□□G

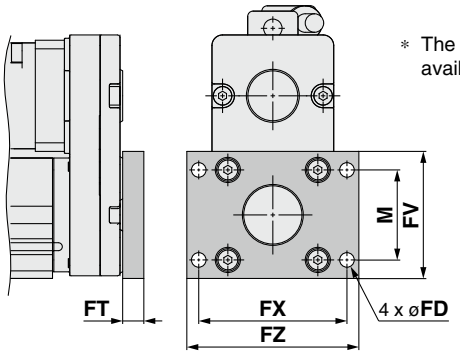

∗ The head flange type is not available for the LEY32/LEY63.

Included parts
·Flange
·Body mounting bolt

Rod/Head Flange

[mm]

Size	FD	FT	FV	FX	FZ	LL	M
25	5.5	8	48	56	65	6.5	34
32	5.5	8	54	62	72	10.5	40
63	9	9	80	92	108	28.4	60

Material: Carbon steel (Nickel plating)

∗ The LL measurement is when the unit is in the Z-phase first detecting position. At this position, 2 mm at the end (size 25, 32) and 4 m at the end (size 63).

Double clevis: LEY 25/32/63 □□ A/B/C/L -□□□D

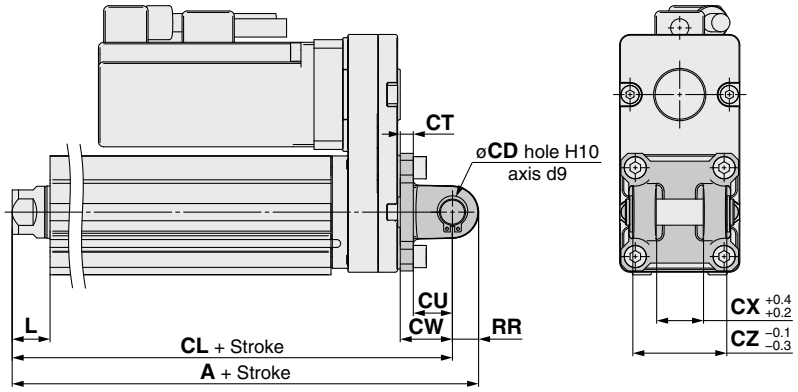

∗ Refer to pages 499 and 500 for details on the rod end nut and mounting bracket.

Included parts
· Double clevis
· Body mounting bolt
· Clevis pin
· Retaining ring

Double Clevis

[mm]

Size	Stroke range [mm]	A	CL	CD	CT	CU	CW	CX	CZ	L	RR
25	30 to 100	160.5	150.5	10	5	14	20	18	36	14.5	10
	105 to 200	185.5	175.5								
32	30 to 100	180.5	170.5	10	6	14	22	18	36	18.5	10
	105 to 200	210.5	200.5								
63	50 to 200	236.6	222.6	14	8	22	30	22	44	37.4	14
	205 to 500	271.6	257.6	—	—						
	505 to 800	306.6	292.6	—	—						

Material: Cast iron (Coating)

∗ The A and CL measurements are when the unit is in the Z-phase first detecting position. At this position, 2 mm at the end (size 25, 32) and 4 mm at the end (size 63).

Accessory Mounting Brackets 1

Accessory Brackets/Support Brackets

Single Knuckle Joint

∗ If a knuckle joint is used, select the body option [end male thread].

I-G02

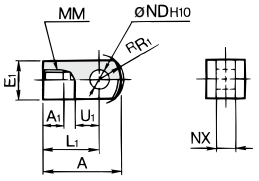

Material: Carbon steel

I-G04
I-G05
I-G10

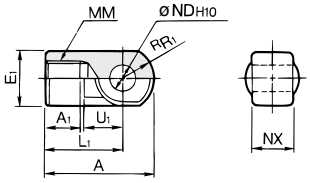

Material: Cast iron

[mm]

Part no.	Applicable size	A	A_1	E_1	L_1	MM	R_1	U_1	ND_{H10}	NX
I-G02	**16**	34	8.5	□16	25	M8 x 1.25	10.3	11.5	$8^{+0.058}_{0}$	$8^{-0.2}_{-0.4}$
I-G04	**25, 32, 40**	42	14	ø22	30	M14 x 1.5	12	14	$10^{+0.058}_{0}$	$18^{-0.3}_{-0.5}$
I-G05	**63**	56	18	ø28	40	M18 x 1.5	16	20	$14^{+0.070}_{0}$	$22^{-0.3}_{-0.5}$

Double Knuckle Joint

Y-G02

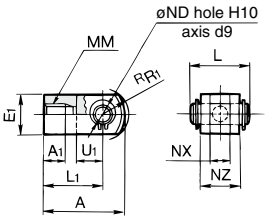

Material: Carbon steel

Y-G04
Y-G05
Y-G10

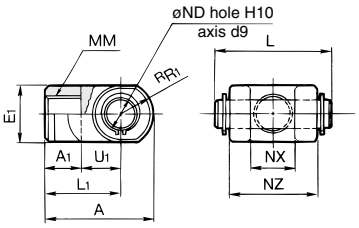

Material: Cast iron

∗ Knuckle pin and retaining ring are included. [mm]

Part no.	Applicable size	A	A_1	E_1	L_1	MM	R_1
Y-G02	**16**	34	8.5	□16	25	M8 x 1.25	10.3
Y-G04	**25, 32, 40**	42	16	ø22	30	M14 x 1.5	12
Y-G05	**63**	56	20	ø28	40	M18 x 1.5	16

Part no.	Applicable size	U_1	ND_{H10}	NX	NZ	L	Applicable pin part no.
Y-G02	**16**	11.5	$8^{+0.058}_{0}$	$8^{+0.4}_{+0.2}$	16	21	**IY-G02**
Y-G04	**25, 32, 40**	14	$10^{+0.058}_{0}$	$18^{+0.5}_{+0.3}$	36	41.6	**IY-G04**
Y-G05	**63**	20	$14^{+0.070}_{0}$	$22^{+0.5}_{+0.3}$	44	50.6	**IY-G05**

Knuckle Pin

∗ Common with double clevis pin

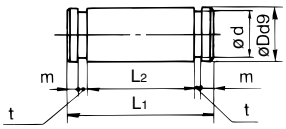

Material: Carbon steel
[mm]

Part no.	Applicable size	Dd9	L_1	L_2	d	m	t	Retaining ring
IY-G02	**16**	$8^{-0.040}_{-0.076}$	21	16.2	7.6	1.5	0.9	Type C retaining ring 8
IY-G04	**25, 32, 40**	$10^{-0.040}_{-0.076}$	41.6	36.2	9.6	1.55	1.15	Type C retaining ring 10
IY-G05	**63**	$14^{-0.050}_{-0.093}$	50.6	44.2	13.4	2.05	1.15	Type C retaining ring 14

Rod End Nut

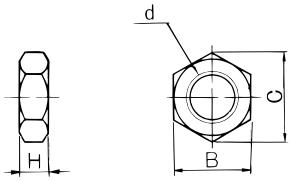

Material: Carbon steel
[mm]

Part no.	Applicable size	d	H	B	C
NT-02	**16**	M8 x 1.25	5	13	15.0
NT-04	**25, 32, 40**	M14 x 1.5	8	22	25.4
NT-05	**63**	M18 x 1.5	11	27	31.2
DA00B7	**100**	M20 x 1.5	12	30	34.6

Mounting Bracket Part Nos.

Mounting bracket	Order qty.	Applicable size					Contents
		16	**25**	**32, 40**	**63**	**100**	
Foot bracket	2∗1	LEY-L016	LEY-L025	LEY-L032	LEY-L063	LEY-L100	Foot bracket x 2 Mounting bolt x 4
Flange	1	LEY-F016	LEY-F025	LEY-F032	LEY-F063	LEY-F100	Flange x 1 Mounting bolt x 4
Double clevis	1	LEY-D016	LEY-D025	LEY-D032	LEY-D063	D5080	Clevis x 1 Mounting bolt x 4 Clevis pin x 1 Type C retaining ring for axis x 2

∗1 When ordering foot brackets, order 2 pieces per actuator.

Simple Joint Brackets

∗ The joint is not included for type A and type B mounting brackets. Therefore, it must be ordered separately.
∗ Use with a force of 7800 N or less.

Joint and Mounting Bracket (Type A/B)/Part No.

Joint **LEY-U025**

Applicable size

025	25, 32, 40

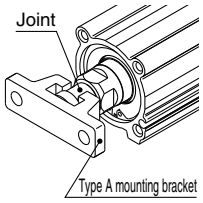

Mounting bracket **YA-03**

Mounting bracket

YA	Type A mounting bracket
YB	Type B mounting bracket

Applicable size

03	25, 32, 40

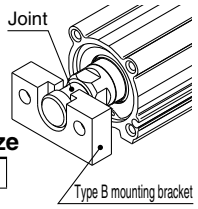

Allowable Eccentricity [mm]

Applicable size	25	32	40
Eccentricity tolerance	±1		
Backlash	0.5		

<How to Order>
- The joint is not included for type A and type B mounting brackets. Therefore, it must be ordered separately.

Example) Order no.
- Joint..... LEY-U025
- Type A mounting bracket..... YA-03

Joint and Mounting Bracket (Type A/B)/Part No.

Applicable size	Joint part no.	Applicable mounting bracket part no.	
		Type A mounting bracket	Type B mounting bracket
25, 32, 40	LEY-U025	YA-03	YB-03

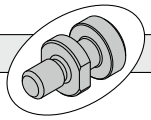

Joint

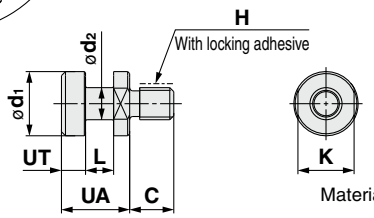

Material: Stainless steel
[mm]

Part no.	Applicable size	UA	C	d1	d2	H	K	L	UT	Weight [g]
LEY-U025	**25, 32, 40**	17	11	16	8	M8 x 1.25	14	7	6	22

Type A Mounting Bracket

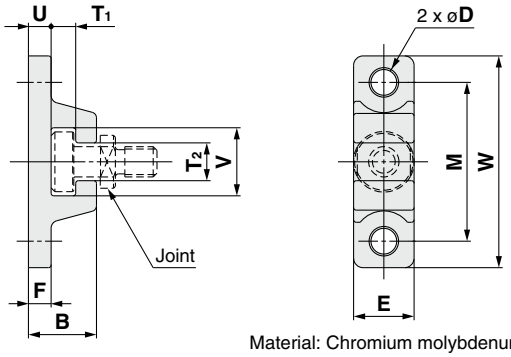

Material: Chromium molybdenum steel
[mm]

Part no.	Applicable size	B	D	E	F	M	T1	T2	U
YA-03	**25, 32, 40**	18	6.8	16	6	42	6.5	10	6

Part no.	Applicable size	V	W	Weight [g]
YA-03	**25, 32, 40**	18	56	55

Type B Mounting Bracket

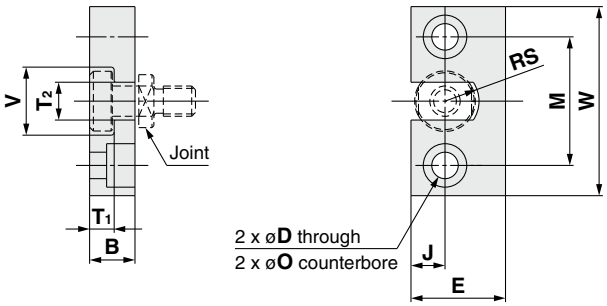

Material: Stainless steel
[mm]

Part no.	Applicable size	B	D	E	J	M	øO
YB-03	**25, 32, 40**	12	7	25	9	34	11.5 depth 7.5

Part no.	Applicable size	T1	T2	V	W	RS	Weight [g]
YB-03	**25, 32, 40**	6.5	10	18	50	9	80

Floating Joints (Refer to the **Web Catalog** for details.)

●For Male Thread/JC (Light weight type)

- **With an aluminum case**

●For Male Thread/JA

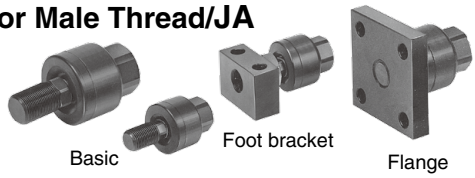

●For Male Thread/JS (Stainless steel)

- **Stainless steel 304 (Exterior)**
- **Dust cover**
  Fluororubber/Silicone rubber

Applicable size	Thread size
16	M8 x 1.25
25, 32, 40	M14 x 1.5
63	M18 x 1.5

●For Female Thread/JB

Applicable size	Thread size
16	M5 x 0.8
25, 32, 40	M8 x 1.25
63	M16 x 2
100	M20 x 1.5

Accessory Mounting Brackets 2

Dimensions: Piston Rod Accessories

Floating joint: JA

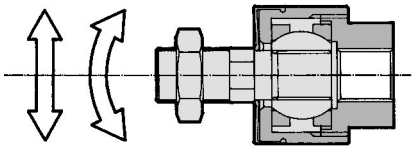

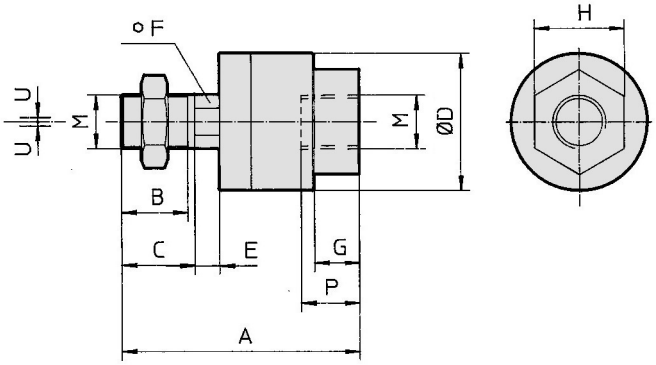

[mm]

Size	Part no.	M	A	B	C	øD	E	F	G	H	P	U	Load [kN]	Weight [g]	Rotating angle
100	**JAH50-20-150**	M20 x 1.5	101	28	31	59.5	11.5	24	16	32	18	2	18	1080	±0.5°

∗ Black color

Rod clevis: GKM (ISO 8140)

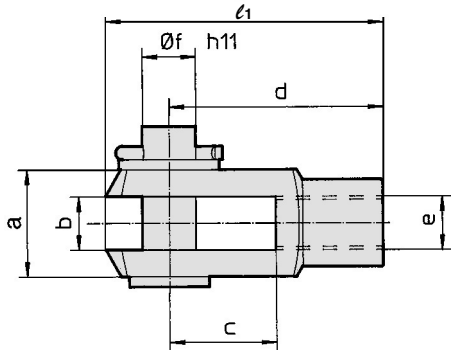

[mm]

Size	Part no.	e	b	d	øf h11 (Shaft)	øf H9 (Hole)	ℓ1	c (Min.)	a (Max.)
100	**GKM20-40**	M20 x 1.5	$20^{+0.5}_{+0.15}$	80	20	20	105	40	40

∗ Supplied with clevis pin and clevis pin bracket

Rod end: KJ (ISO 8139)

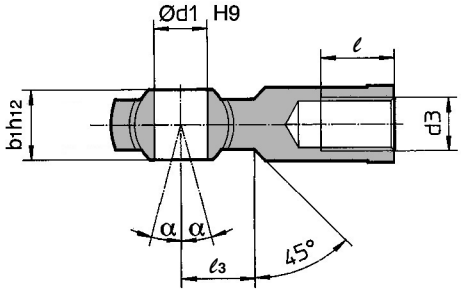

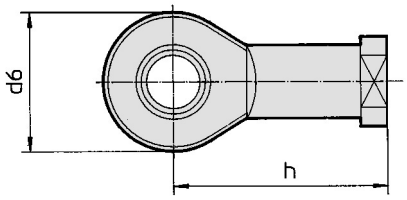

[mm]

Size	Part no.	d3	ød1 H9	h	d6 (Max.)	b1 h12	ℓ (Min.)	α	ℓ3
100	**KJ20D**	M20 x 1.5	20	77	50	25	33	4°	27

Auto Switch Mounting

Auto Switch Proper Mounting Position

Applicable auto switch: D-M9□(V), D-M9□E(V), D-M9□W(V), D-M9□A(V)

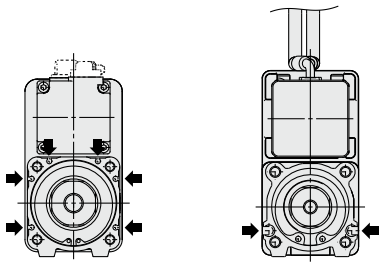

➡ Switch mounting groove

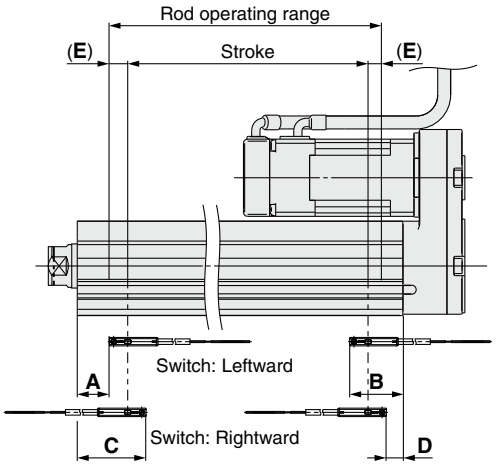

[mm]

Size	Stroke range	Auto switch position				Return to origin distance	Operating range
		Leftward mounting		Rightward mounting			
		A	B	C	D	E	—
16	10 to 100	21.5	46.5	33.5	34.5	(2)	2.9
	105 to 300	41.5		53.5			
25	15 to 100	27	62.5	39	50.5	(2)	4.2
	105 to 400	52		64			
32/40	20 to 100	30.5	65.5	42.5	53.5	(2)	4.9
	105 to 500	60.5		72.5			
63	50 to 200	37	86	49	74	(4)	9.8
	205 to 500	72		84			
	505 to 800	107		119			

* The values in the table to the left are to be used as a reference when mounting auto switches for stroke end detection. Adjust the auto switch after confirming the operating conditions in the actual setting.
* An auto switch cannot be mounted on the same side as a motor.
* For LEYG series models (with a guide), an auto switch cannot be mounted on the guide attachment side (rod side).
* Since the operating range is provided as a guideline including hysteresis, it cannot be guaranteed (assuming approx. ±30% dispersion). It may change substantially depending on the ambient environment.

Auto Switch Mounting

Size: 16, 25, 32, 40, 63

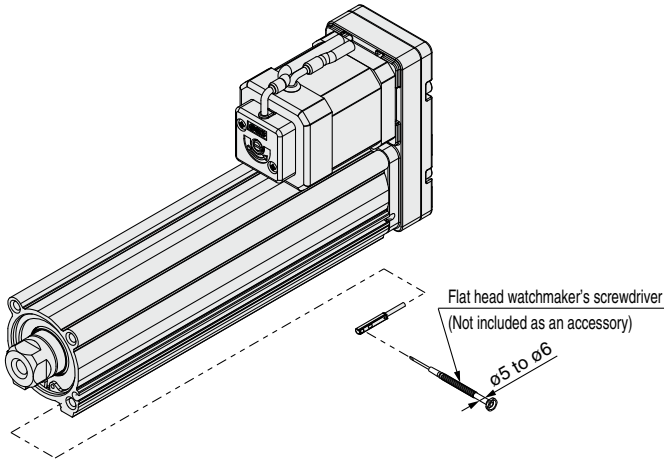

Tightening Torque for Auto Switch Mounting Screw [N·m]

Auto switch model	Tightening torque
D-M9□(V) **D-M9□E(V)** **D-M9□W(V)**	0.05 to 0.15
D-M9□A(V)	0.05 to 0.10

* When tightening the auto switch mounting screw (included with the auto switch), use a watchmaker's screwdriver with a handle diameter of 5 to 6 mm.

Size: 100

A switch spacer is required in order to mount an auto switch.
When mounting an auto switch, first, hold a switch spacer between your fingers and press it into the slot. When doing this, confirm that it is set in the correct mounting orientation, or reinsert it if necessary. Next, insert the auto switch into the slot and slide it until it is positioned under the switch spacer.
After confirming the mounting position, use a flat head watchmaker's screwdriver to tighten the included auto switch mounting screw.

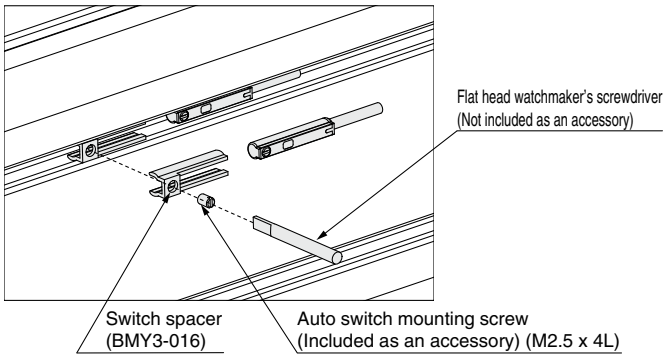

Switch Spacer Part No.

Switch spacer	BMY3-016

Tightening Torque for Auto Switch Mounting Screw

Auto switch model	Tightening torque
D-M9□(V) **D-M9□W(V)**	0.10 to 0.15

Solid State Auto Switch Direct Mounting Type
D-M9N(V)/D-M9P(V)/D-M9B(V)

Refer to the SMC website for details on products that are compliant with international standards.

Grommet

- **2-wire load current is reduced (2.5 to 40 mA).**
- **Using flexible cable as standard spec.**

⚠Caution

Precautions

Fix the auto switch with the existing screw installed on the auto switch body. The auto switch may be damaged if a screw other than the one supplied is used.

Auto Switch Specifications

PLC: Programmable Logic Controller

D-M9□, D-M9□V (With indicator light)						
Auto switch model	D-M9N	D-M9NV	D-M9P	D-M9PV	D-M9B	D-M9BV
Electrical entry direction	In-line	Perpendicular	In-line	Perpendicular	In-line	Perpendicular
Wiring type	3-wire				2-wire	
Output type	NPN		PNP		—	
Applicable load	IC circuit, Relay, PLC				24 VDC relay, PLC	
Power supply voltage	5, 12, 24 VDC (4.5 to 28 V)				—	
Current consumption	10 mA or less				—	
Load voltage	28 VDC or less		—		24 VDC (10 to 28 VDC)	
Load current	40 mA or less				2.5 to 40 mA	
Internal voltage drop	0.8 V or less at 10 mA (2 V or less at 40 mA)				4 V or less	
Leakage current	100 μA or less at 24 VDC				0.8 mA or less	
Indicator light	Red LED illuminates when turned ON.					
Standard	CE/UKCA marking					

Oilproof Flexible Heavy-duty Lead Wire Specifications

Auto switch model		D-M9N(V)	D-M9P(V)	D-M9B(V)
Sheath	Outside diameter [mm]	ø2.6		
Insulator	Number of cores	3 cores (Brown/Blue/Black)		2 cores (Brown/Blue)
	Outside diameter [mm]	ø0.88		
Conductor	Effective area [mm²]	0.15		
	Strand diameter [mm]	ø0.05		
Min. bending radius [mm] (Reference values)		17		

∗ Refer to page 1363 for solid state auto switch common specifications.
∗ Refer to page 1363 for lead wire lengths.

Weight

[g]

Auto switch model		D-M9N(V)	D-M9P(V)	D-M9B(V)
Lead wire length	0.5 m (**Nil**)	8		7
	1 m (**M**)	14		13
	3 m (**L**)	41		38
	5 m (**Z**)	68		63

Dimensions

[mm]

D-M9□

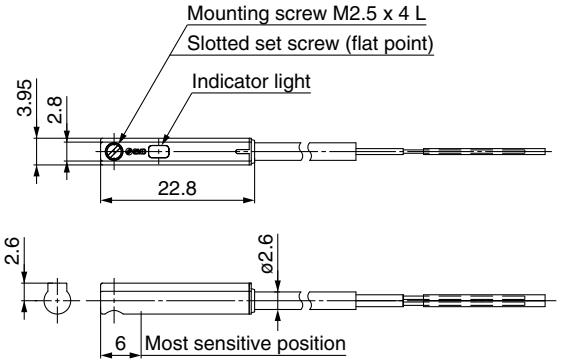

D-M9□V

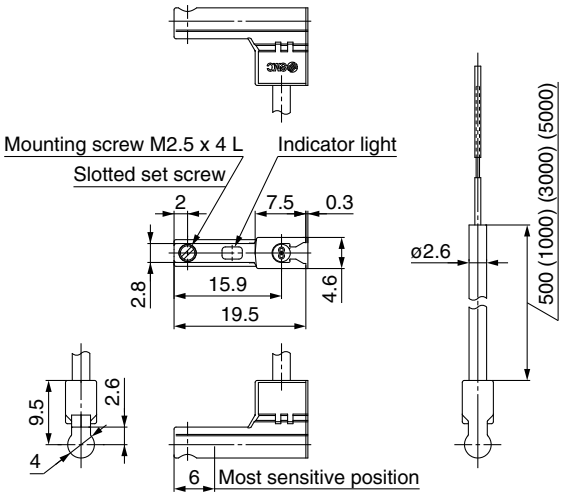

Normally Closed Solid State Auto Switch Direct Mounting Type
D-M9NE(V)/D-M9PE(V)/D-M9BE(V)

Refer to the SMC website for details on products that are compliant with international standards.

Grommet

- **Output signal turns on when no magnetic force is detected.**
- **Can be used for the actuator adopted by the solid state auto switch D-M9 series (excluding special order products)**

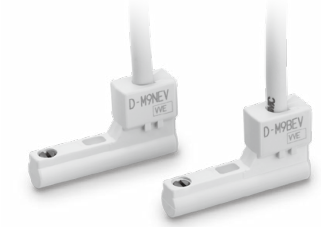

⚠Caution

Precautions

Fix the auto switch with the existing screw installed on the auto switch body. The auto switch may be damaged if a screw other than the one supplied is used.

Auto Switch Specifications

PLC: Programmable Logic Controller

D-M9□E, D-M9□EV (With indicator light)						
Auto switch model	D-M9NE	D-M9NEV	D-M9PE	D-M9PEV	D-M9BE	D-M9BEV
Electrical entry direction	In-line	Perpendicular	In-line	Perpendicular	In-line	Perpendicular
Wiring type	3-wire				2-wire	
Output type	NPN		PNP		—	
Applicable load	IC circuit, Relay, PLC				24 VDC relay, PLC	
Power supply voltage	5, 12, 24 VDC (4.5 to 28 V)				—	
Current consumption	10 mA or less				—	
Load voltage	28 VDC or less		—		24 VDC (10 to 28 VDC)	
Load current	40 mA or less				2.5 to 40 mA	
Internal voltage drop	0.8 V or less at 10 mA (2 V or less at 40 mA)				4 V or less	
Leakage current	100 μA or less at 24 VDC				0.8 mA or less	
Indicator light	Red LED illuminates when turned ON.					
Standard	CE/UKCA marking					

Oilproof Flexible Heavy-duty Lead Wire Specifications

Auto switch model		D-M9NE(V)	D-M9PE(V)	D-M9BE(V)
Sheath	Outside diameter [mm]	ø2.6		
Insulator	Number of cores	3 cores (Brown/Blue/Black)		2 cores (Brown/Blue)
	Outside diameter [mm]	ø0.88		
Conductor	Effective area [mm²]	0.15		
	Strand diameter [mm]	ø0.05		
Min. bending radius [mm] (Reference values)		17		

∗ Refer to page 1363 for solid state auto switch common specifications.
∗ Refer to page 1363 for lead wire lengths.

Weight

[g]

Auto switch model		D-M9NE(V)	D-M9PE(V)	D-M9BE(V)
Lead wire length	0.5 m (**Nil**)	8		7
	1 m (**M**)∗1	14		13
	3 m (**L**)	41		38
	5 m (**Z**)∗1	68		63

∗1 The 1 m and 5 m options are produced upon receipt of order.

Dimensions

[mm]

D-M9□E

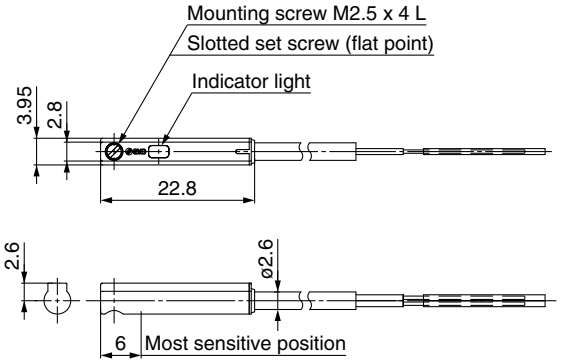

D-M9□EV

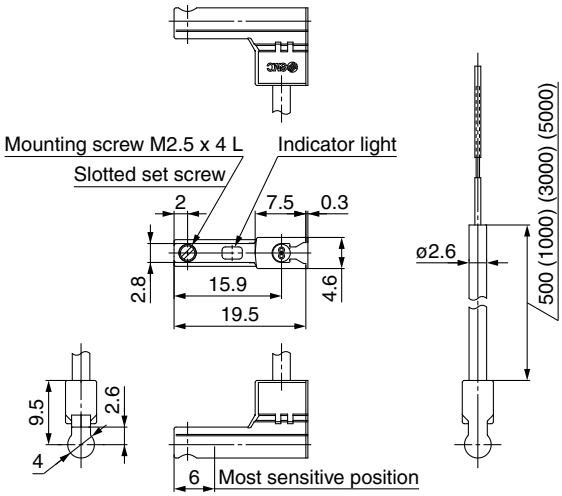

2-Color Indicator Solid State Auto Switch Direct Mounting Type
D-M9NW(V)/D-M9PW(V)/D-M9BW(V)

Refer to the SMC website for details on products that are compliant with international standards.

Grommet

- **2-wire load current is reduced (2.5 to 40 mA).**
- **Using flexible cable as standard spec.**
- **The proper operating range can be determined by the color of the light. (Red → Green ← Red)**

⚠Caution

Precautions

Fix the auto switch with the existing screw installed on the auto switch body. The auto switch may be damaged if a screw other than the one supplied is used.

Auto Switch Specifications

PLC: Programmable Logic Controller

D-M9□W, D-M9□WV (With indicator light)						
Auto switch model	D-M9NW	D-M9NWV	D-M9PW	D-M9PWV	D-M9BW	D-M9BWV
Electrical entry direction	In-line	Perpendicular	In-line	Perpendicular	In-line	Perpendicular
Wiring type	3-wire				2-wire	
Output type	NPN		PNP		—	
Applicable load	IC circuit, Relay, PLC				24 VDC relay, PLC	
Power supply voltage	5, 12, 24 VDC (4.5 to 28 V)				—	
Current consumption	10 mA or less				—	
Load voltage	28 VDC or less		—		24 VDC (10 to 28 VDC)	
Load current	40 mA or less				2.5 to 40 mA	
Internal voltage drop	0.8 V or less at 10 mA (2 V or less at 40 mA)				4 V or less	
Leakage current	100 μA or less at 24 VDC				0.8 mA or less	
Indicator light	Operating range ····· Red LED illuminates. Proper operating range ····· Green LED illuminates.					
Standard	CE/UKCA marking					

Oilproof Flexible Heavy-duty Lead Wire Specifications

Auto switch model		D-M9NW(V)	D-M9PW(V)	D-M9BW(V)
Sheath	Outside diameter [mm]	ø2.6		
Insulator	Number of cores	3 cores (Brown/Blue/Black)		2 cores (Brown/Blue)
	Outside diameter [mm]	ø0.88		
Conductor	Effective area [mm²]	0.15		
	Strand diameter [mm]	ø0.05		
Min. bending radius [mm] (Reference values)		17		

∗ Refer to page 1363 for solid state auto switch common specifications.
∗ Refer to page 1363 for lead wire lengths.

Weight

[g]

Auto switch model		D-M9NW(V)	D-M9PW(V)	D-M9BW(V)
Lead wire length	0.5 m (**Nil**)	8		7
	1 m (**M**)	14		13
	3 m (**L**)	41		38
	5 m (**Z**)	68		63

Dimensions

[mm]

D-M9□W

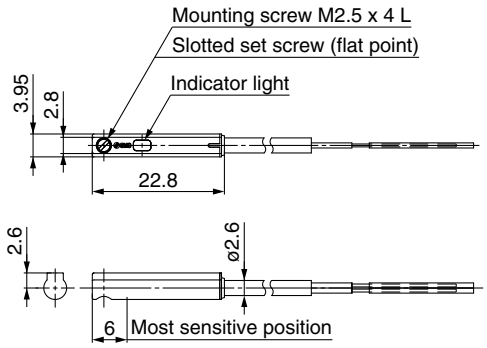

D-M9□WV

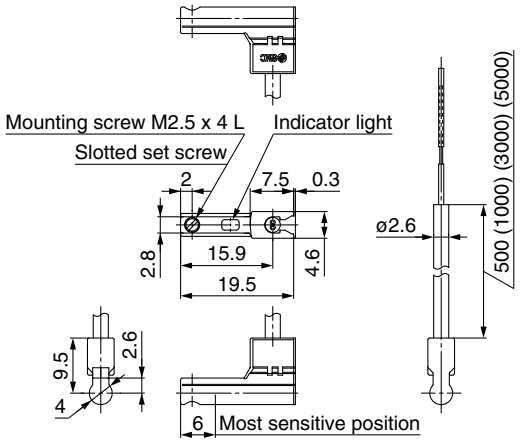

Guide Rod Type

LEYG Series

Battery-less Absolute (Step Motor 24 VDC)

p. 533

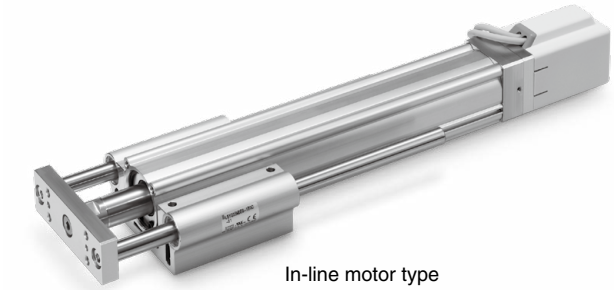

In-line motor type

Incremental (Step Motor 24 VDC)

Incremental (Servo Motor 24 VDC)

p. 545

Top side parallel motor type

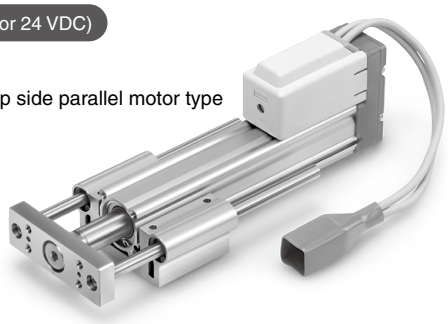

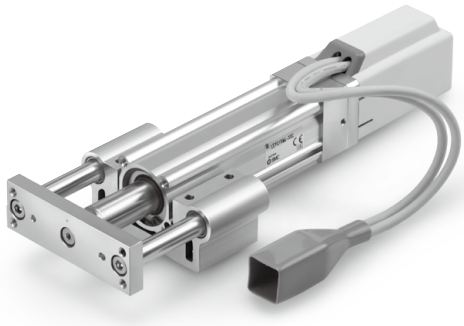

In-line motor type

AC Servo Motor

p. 559, 567

Top side parallel motor type

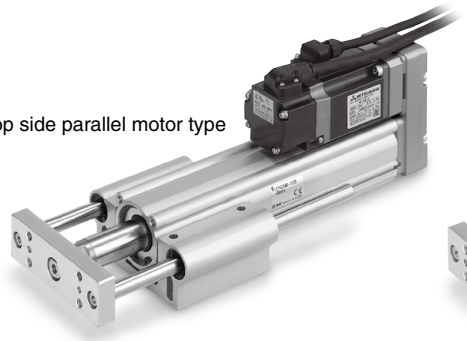

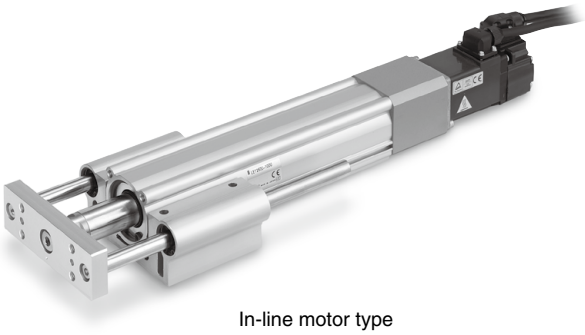

In-line motor type

Controllers/Drivers p. 994

AC Servo Motor Drivers p. 1100

Model Selection

LEYG□E Series ▶ p. 533

Moment Load Graph

Selection conditions

		Vertical	Horizontal	
Mounting position		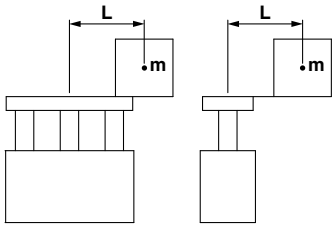	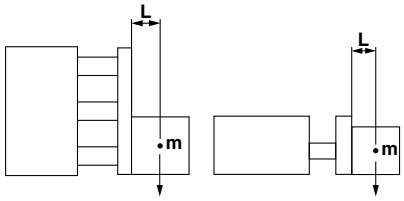	
Max. speed [mm/s]		"Speed–Work Load Graph"	200 or less	Over 200
Bearing	Sliding bearing	Graphs ①, ②	Graphs ⑤, ⑥*1	—
	Ball bushing bearing	Graphs ③, ④	Graphs ⑦, ⑧	Graphs ⑨, ⑩

*1 For the sliding bearing type, the speed is restricted with a horizontal/moment load.

Vertical Mounting, Sliding Bearing

① **70 mm stroke or less**

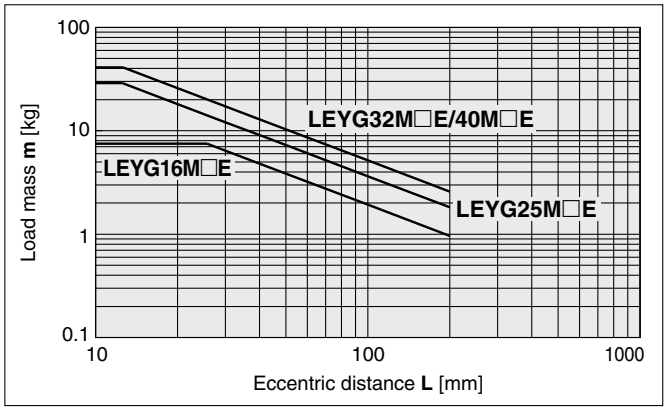

② **Over 75 mm stroke**

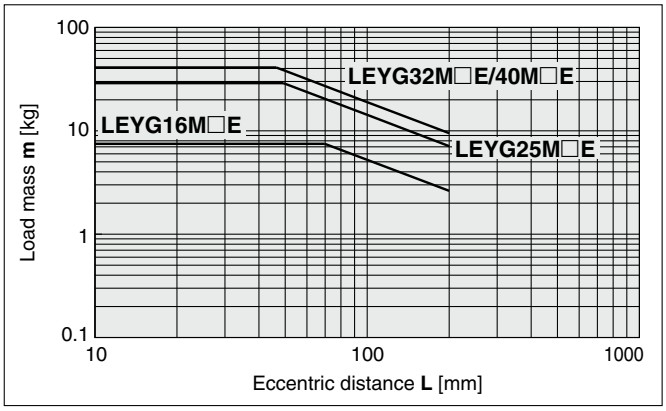

* The limit of vertical load mass varies depending on "lead" and "speed."
Check the "Speed–Work Load Graph" on page 509.

Vertical Mounting, Ball Bushing Bearing

③ **35 mm stroke or less**

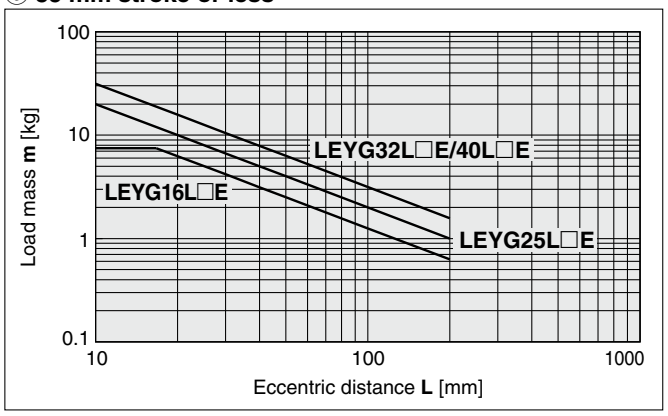

④ **Over 40 mm stroke**

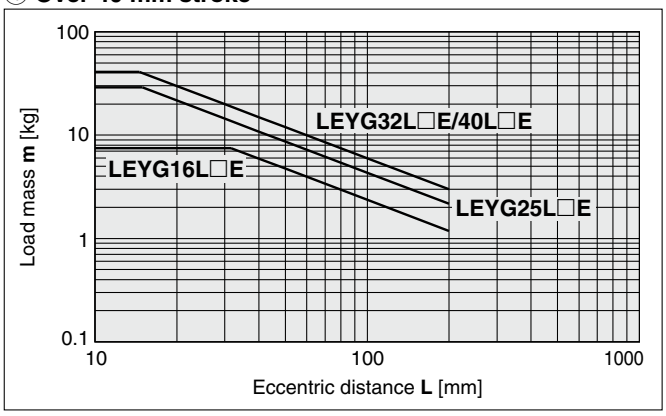

* The limit of vertical load mass varies depending on "lead" and "speed."
Check the "Speed–Work Load Graph" on page 509.

Moment Load Graph

Horizontal Mounting, Sliding Bearing

⑤ **L = 50 mm**

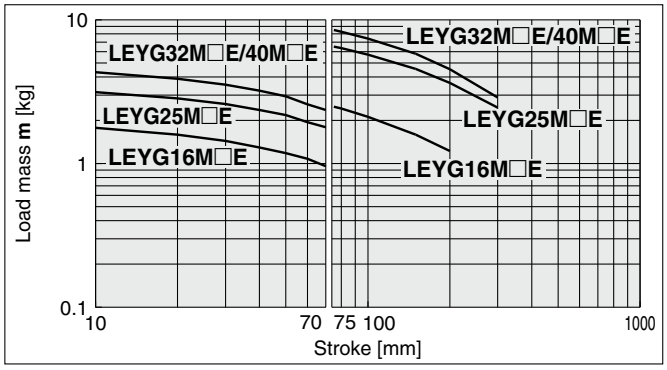

⑥ **L = 100 mm**

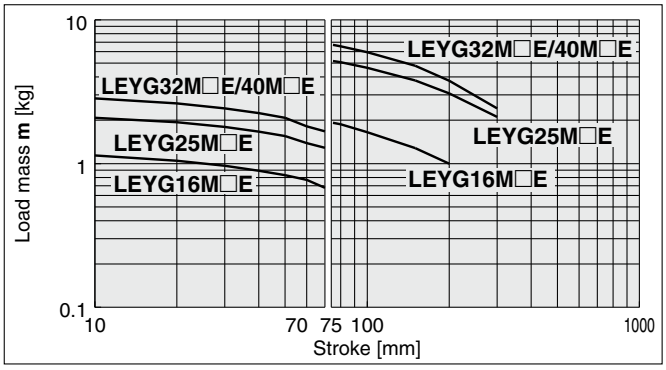

∗ Set the speed to less than or equal to the values shown below.

Motor type	LEYG□M□A	LEYG□M□B	LEYG□M□C
Battery-less absolute (Step motor 24 VDC)	200 mm/s	125 mm/s	75 mm/s

Horizontal Mounting, Ball Bushing Bearing

⑦ **L = 50 mm Max. speed = 200 mm/s or less**

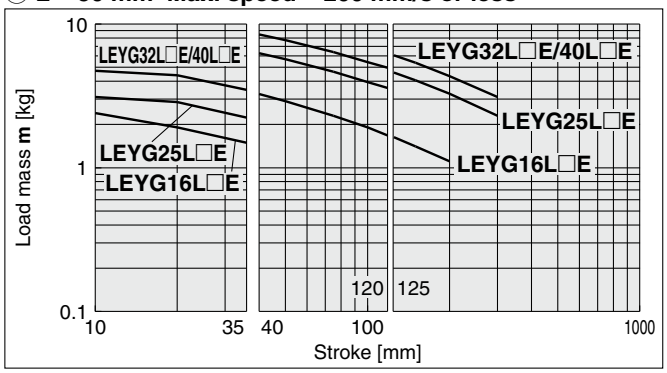

⑧ **L = 100 mm Max. speed = 200 mm/s or less**

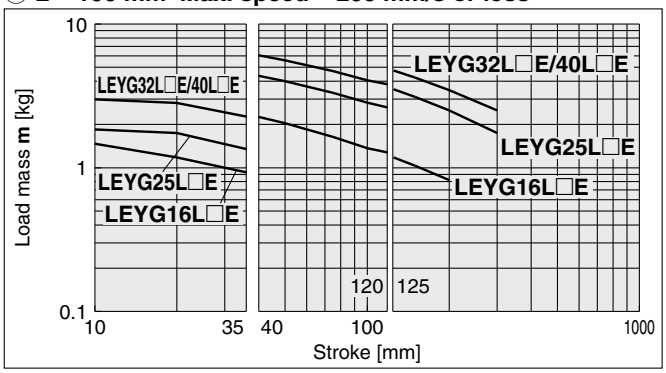

⑨ **L = 50 mm Max. speed = Over 200 mm/s**

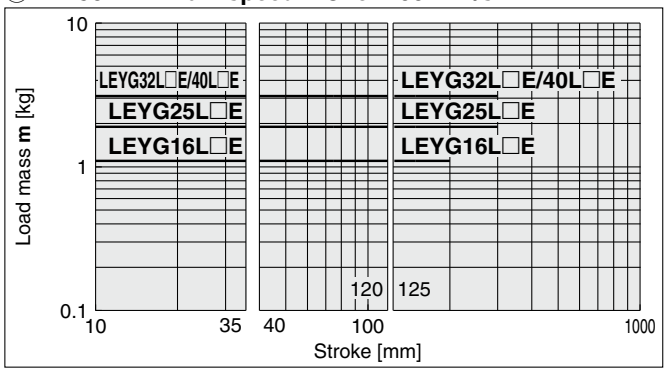

⑩ **L = 100 mm Max. speed = Over 200 mm/s**

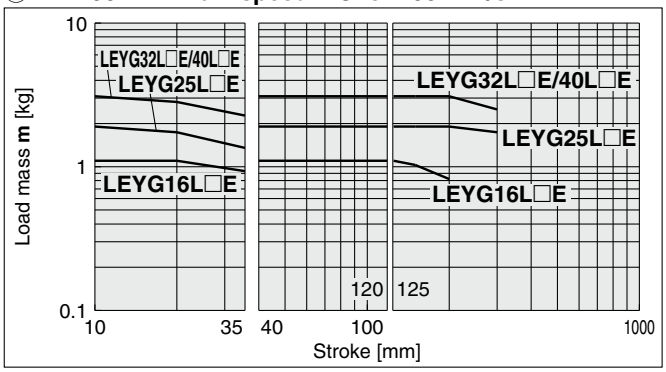

Operating Range when Used as a Stopper

LEYG□M (Sliding bearing)

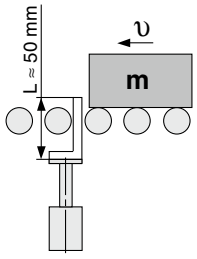

⚠Caution

Handling Precautions

- ∗ When used as a stopper, select a model with a stroke of 30 mm or less.
- ∗ LEYG□L□E (ball bushing bearing) cannot be used as a stopper.
- ∗ Workpiece collision in series with guide rod cannot be permitted (**Fig. a**).
- ∗ The body should not be mounted on the end. It must be mounted on the top or bottom (**Fig. b**).

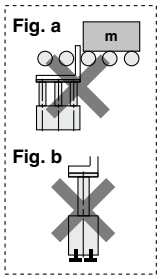

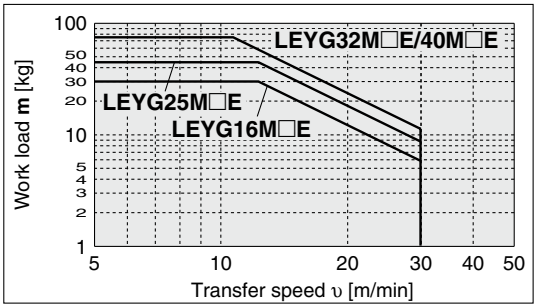

Speed–Work Load Graph (Guide)
For Battery-less Absolute (Step Motor 24 VDC)

Horizontal

LEYG16$^{M}_{L}$□E ▨ for acceleration/deceleration: 2000 mm/s²

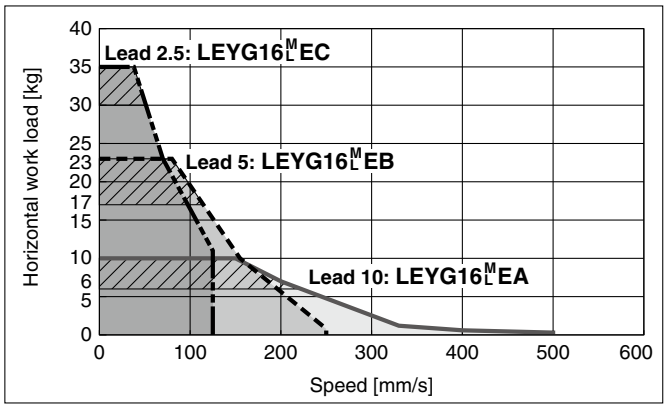

LEYG25$^{M}_{L}$□E ▨ for acceleration/deceleration: 2000 mm/s²

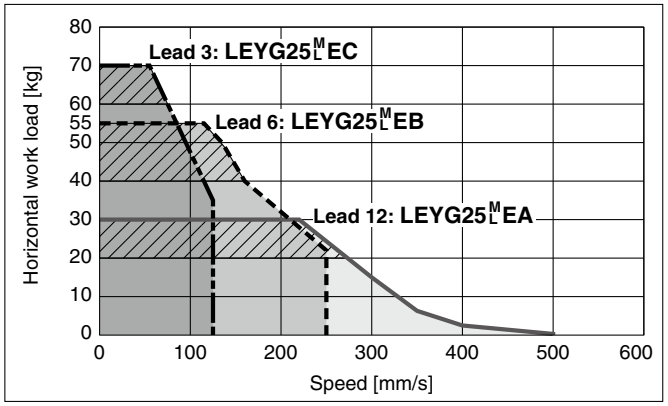

LEYG32$^{M}_{L}$□E ▨ for acceleration/deceleration: 2000 mm/s²

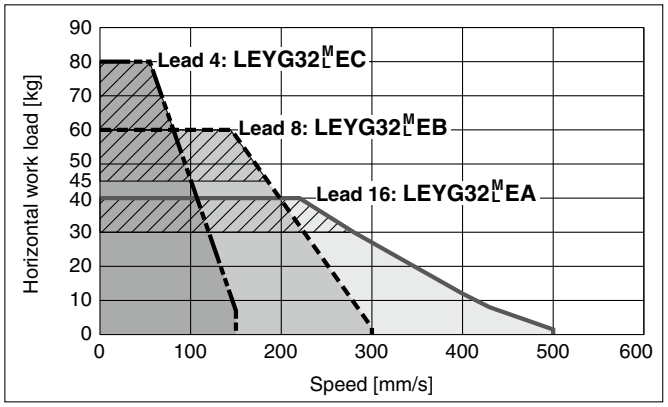

LEYG40$^{M}_{L}$□E ▨ for acceleration/deceleration: 2000 mm/s²

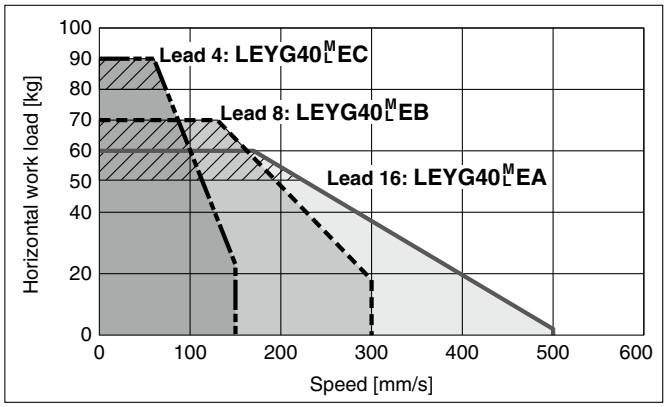

Vertical

LEYG16$^{M}_{L}$□E

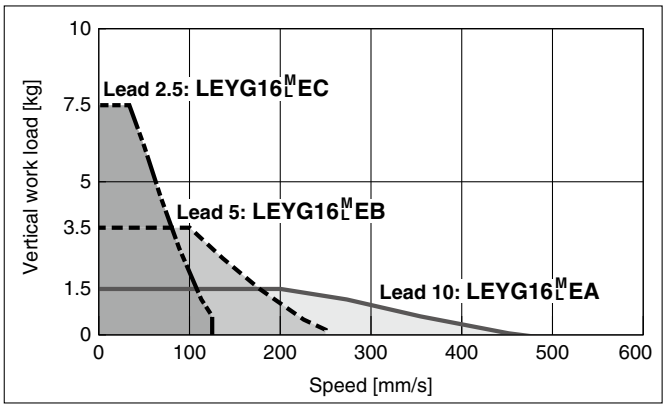

LEYG25$^{M}_{L}$□E

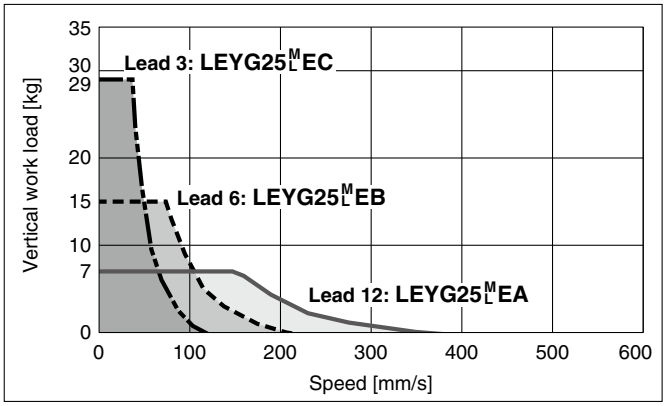

LEYG32$^{M}_{L}$□E

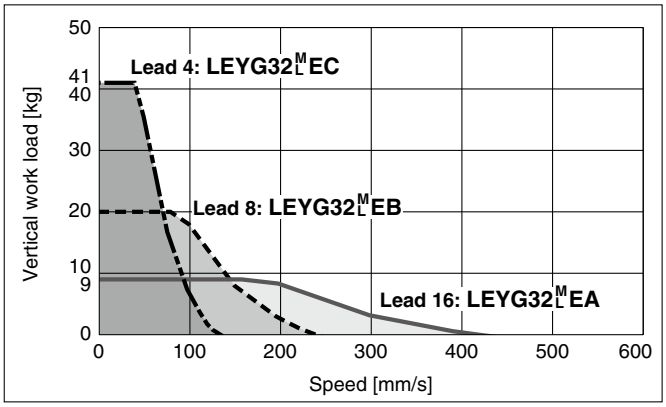

LEYG40$^{M}_{L}$□E

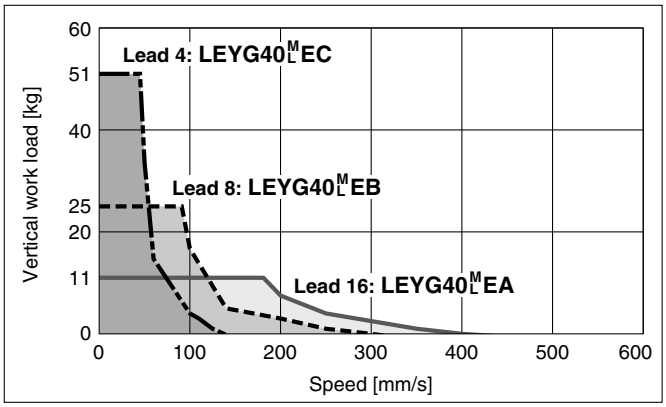

Force Conversion Graph (Guide)

Battery-less Absolute (Step Motor 24 VDC)

LEYG16$^{M}_{L}$□E

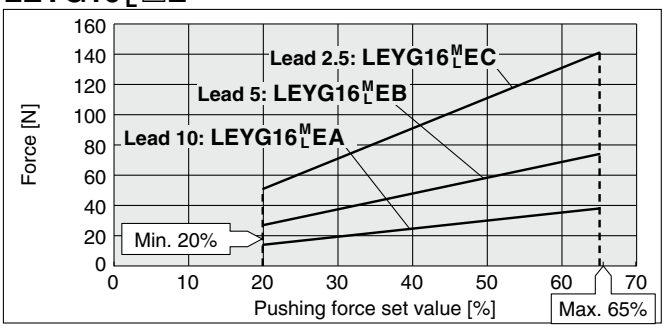

Ambient temperature	Pushing force set value [%]	Duty ratio [%]	Continuous pushing time [min]
30°C or less	65 or less	100	No restriction
40°C	40 or less	100	No restriction
	50	30	45 or less
	60	18	15 or less
	65	15	10 or less

LEYG25$^{M}_{L}$□E

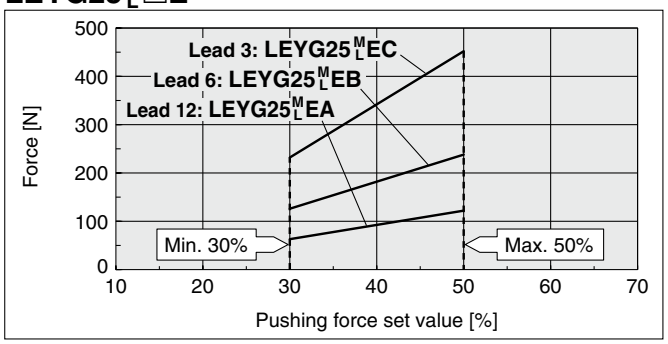

Ambient temperature	Pushing force set value [%]	Duty ratio [%]	Continuous pushing time [min]
40°C or less	50 or less	100	No restriction

LEYG32$^{M}_{L}$□E

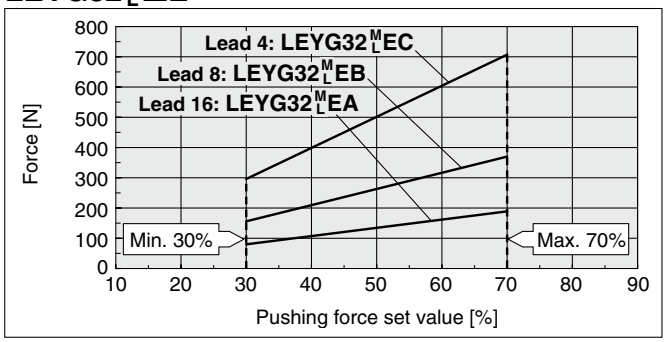

Ambient temperature	Pushing force set value [%]	Duty ratio [%]	Continuous pushing time [min]
40°C or less	70 or less	100	No restriction

LEYG40$^{M}_{L}$□E

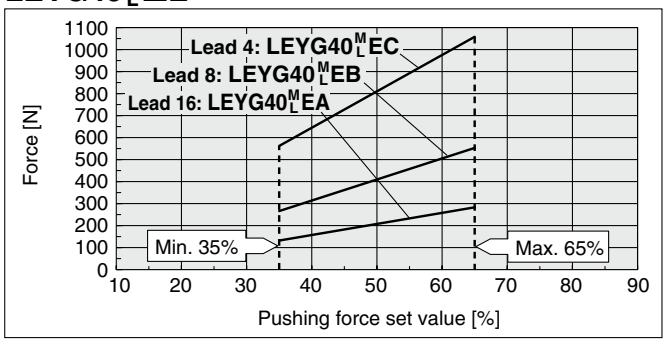

Ambient temperature	Pushing force set value [%]	Duty ratio [%]	Continuous pushing time [min]
40°C or less	65 or less	100	No restriction

<Limit Values for Pushing Force and Trigger Level in Relation to Pushing Speed>

Model	Lead	Pushing speed [mm/s]	Pushing force (Setting input value)
LEYG16$^{M}_{L}$□E	A/B/C	21 to 50	45 to 65%
LEYG25$^{M}_{L}$□E	A/B/C	21 to 35	40 to 50%
LEYG32$^{M}_{L}$□E	A	24 to 30	50 to 70%
	B/C	21 to 30	
LEYG40$^{M}_{L}$□E	A	24 to 30	50 to 65%
	B/C	21 to 30	

<Set Values for Vertical Upward Transfer Pushing Operations>

Model	LEYG16$^{M}_{L}$□E			LEYG25$^{M}_{L}$□E			LEYG32$^{M}_{L}$□E			LEYG40$^{M}_{L}$□E		
Lead	**A**	**B**	**C**	**A**	**B**	**C**	**A**	**B**	**C**	**A**	**B**	**C**
Work load [kg]	0.5	1	2.5	1.5	4	9	2.5	7	16	5	12	26
Pushing force	65%			50%			70%			65%		

Allowable Rotational Torque of Plate: T

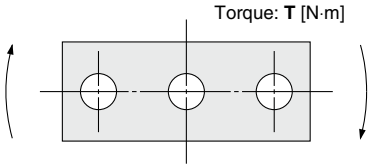

T [N·m]

Model	Stroke [mm]				
	30	50	100	200	300
LEYG16M	0.70	0.57	1.05	0.56	—
LEYG16L	0.82	1.48	0.97	0.57	—
LEYG25M	1.56	1.29	3.50	2.18	1.36
LEYG25L	1.52	3.57	2.47	2.05	1.44
LEYG32M	2.55	2.09	5.39	3.26	1.88
LEYG32L	2.80	5.76	4.05	3.23	2.32
LEYG40M	2.55	2.09	5.39	3.26	1.88
LEYG40L	2.80	5.76	4.05	3.23	2.32

Non-rotating Accuracy of Plate: θ

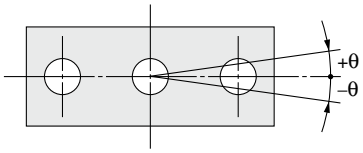

Size	Non-rotating accuracy θ	
	LEYG□M□E	**LEYG□L□E**
16	0.06°	0.05°
25		0.04°
32	0.05°	
40		

Plate Displacement: δ

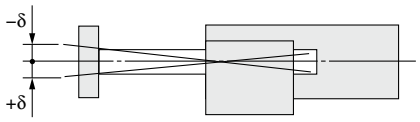

[mm]

Model	Stroke [mm]				
	30	**50**	**100**	**200**	**300**
LEYG16M	±0.20	±0.25	±0.24	±0.27	—
LEYG16L	±0.13	±0.12	±0.17	±0.19	—
LEYG25M	±0.26	±0.31	±0.25	±0.38	±0.36
LEYG25L	±0.13	±0.13	±0.17	±0.20	±0.23
LEYG32M	±0.23	±0.29	±0.23	±0.36	±0.34
LEYG32L	±0.11	±0.11	±0.15	±0.19	±0.22
LEYG40M	±0.23	±0.29	±0.23	±0.36	±0.34
LEYG40L	±0.11	±0.11	±0.15	±0.19	±0.22

∗ The values without a load are shown.

Model Selection

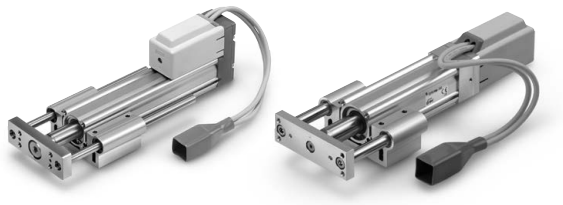

LEYG Series ▶p. 545

Moment Load Graph

Selection conditions

		Vertical	Horizontal	
Mounting position		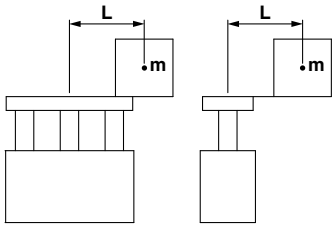	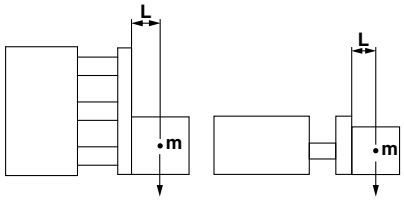	
Max. speed [mm/s]		"Speed–Work Load Graph"	200 or less	Over 200
Bearing	Sliding bearing	Graphs ①, ②	Graphs ⑤, ⑥*1	—
	Ball bushing bearing	Graphs ③, ④	Graphs ⑦, ⑧	Graphs ⑨, ⑩

*1 For the sliding bearing type, the speed is restricted with a horizontal/moment load.

Vertical Mounting, Sliding Bearing

① **70 mm stroke or less**

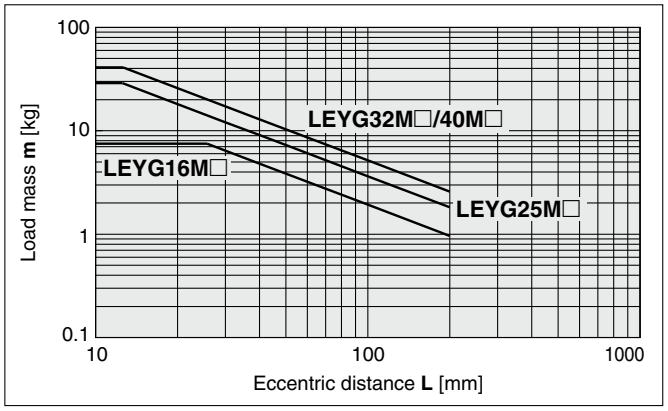

② **Over 75 mm stroke**

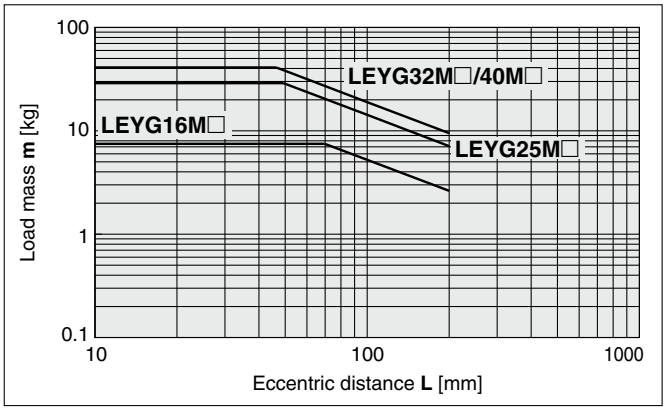

* The limit of vertical load mass varies depending on "lead" and "speed."
Check the "Speed–Work Load Graph" on pages 515 to 517.

Vertical Mounting, Ball Bushing Bearing

③ **35 mm stroke or less**

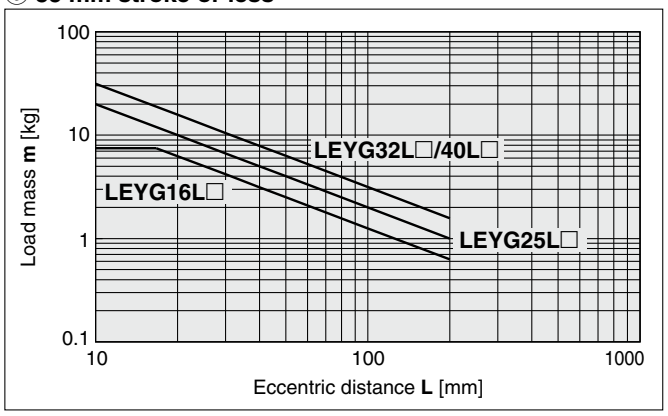

④ **Over 40 mm stroke**

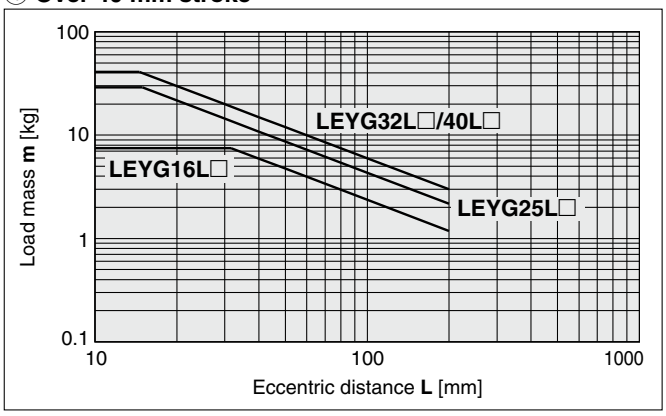

* The limit of vertical load mass varies depending on "lead" and "speed."
Check the "Speed–Work Load Graph" on pages 515 to 517.

Moment Load Graph

Horizontal Mounting, Sliding Bearing

⑤ **L = 50 mm**

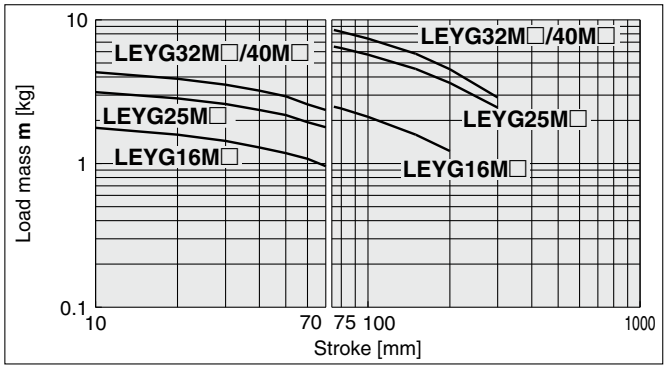

⑥ **L = 100 mm**

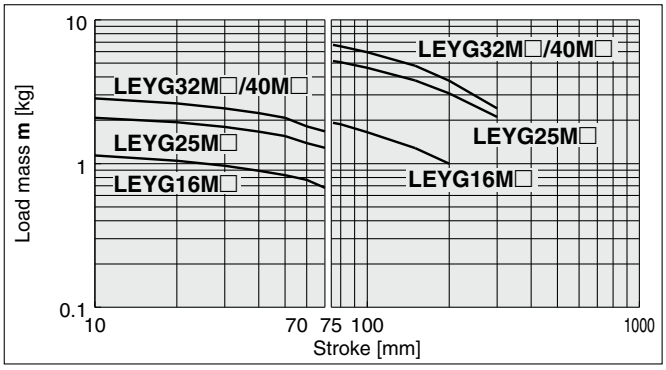

∗ Set the speed to less than or equal to the values shown below.

Motor type	LEYG□M□A	LEYG□M□B	LEYG□M□C
Incremental (Step motor 24 VDC)	200 mm/s	125 mm/s	75 mm/s
Incremental (Servo motor 24 VDC)	200 mm/s	200 mm/s	125 mm/s

∗ For the specifications below, operate the system at the "load mass" shown in the graph x 80%.
- LEYG25MAA/Incremental (Servo motor 24 VDC), Lead 12

Horizontal Mounting, Ball Bushing Bearing

⑦ **L = 50 mm Max. speed = 200 mm/s or less**

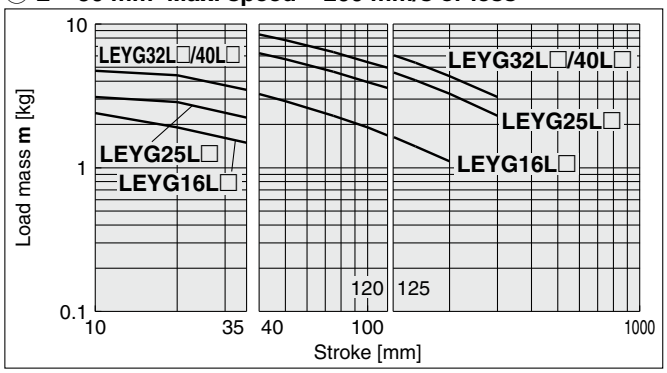

⑧ **L = 100 mm Max. speed = 200 mm/s or less**

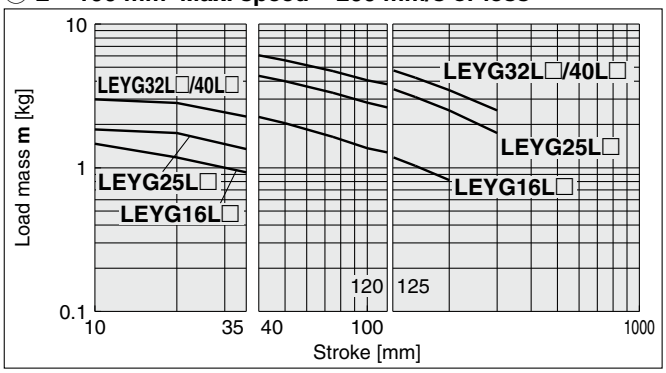

⑨ **L = 50 mm Max. speed = Over 200 mm/s**

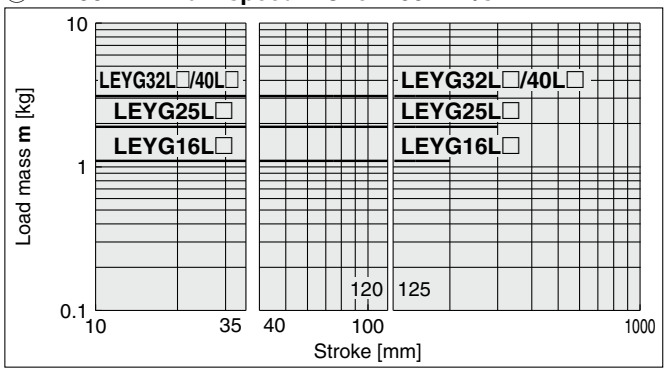

⑩ **L = 100 mm Max. speed = Over 200 mm/s**

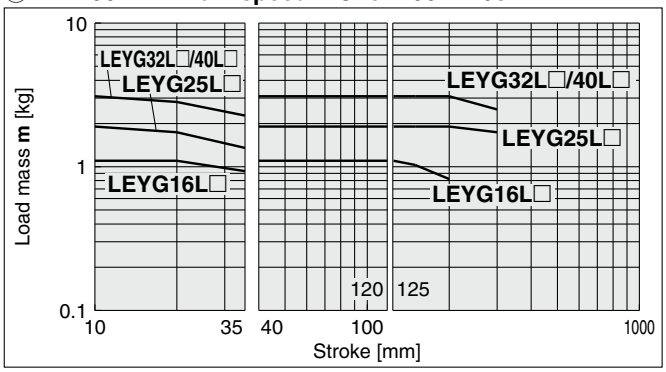

Operating Range when Used as a Stopper

LEYG□M (Sliding bearing)

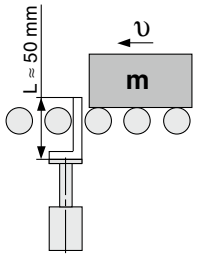

⚠Caution

Handling Precautions

∗ When used as a stopper, select a model with a stroke of 30 mm or less.
∗ LEYG□L (ball bushing bearing) cannot be used as a stopper.
∗ Workpiece collision in series with guide rod cannot be permitted (**Fig. a**).
∗ The body should not be mounted on the end. It must be mounted on the top or bottom (**Fig. b**).

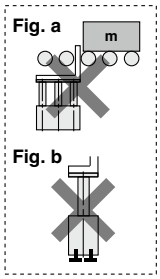

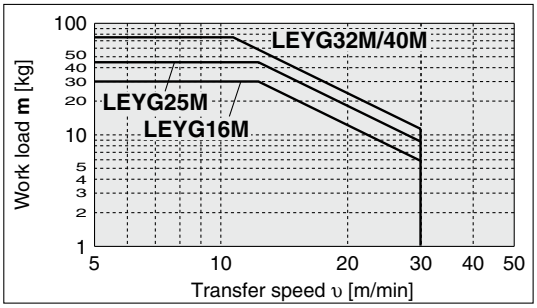

Speed–Work Load Graph (Guide)
For Step Motor (Servo/24 VDC) JXC□1, LECP1

∗ These graphs show the work load when the external guide is used together. When using the LEYG alone, refer to pages 513 and 514.

Refer to page 516 for the LECPA, JXC□$^{2}_{3}$ and page 517 for the LECA6.

Horizontal

LEYG16$^{M}_{L}$□ ▨ for acceleration/deceleration: 2000 mm/s²

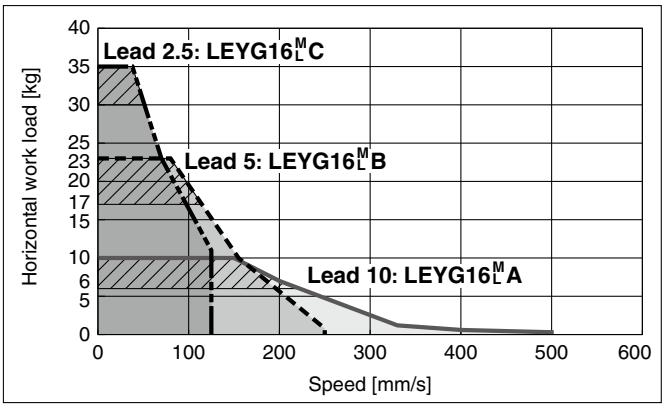

LEYG25$^{M}_{L}$□ ▨ for acceleration/deceleration: 2000 mm/s²

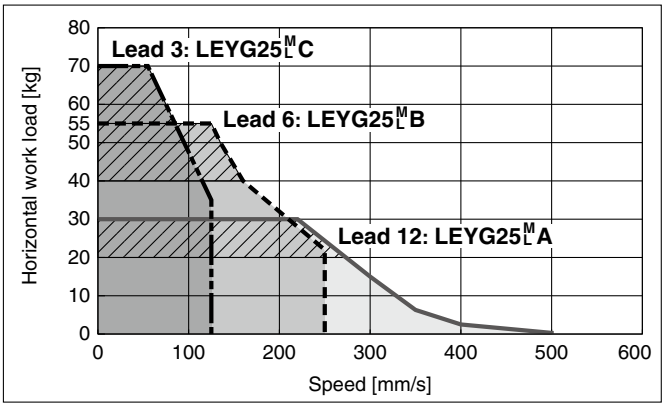

LEYG32$^{M}_{L}$□ ▨ for acceleration/deceleration: 2000 mm/s²

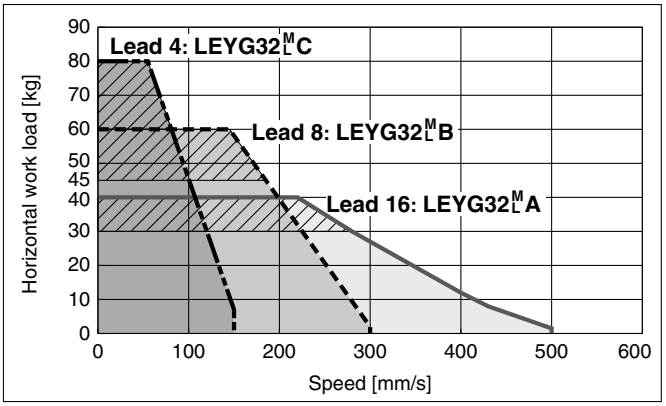

LEYG40$^{M}_{L}$□ ▨ for acceleration/deceleration: 2000 mm/s²

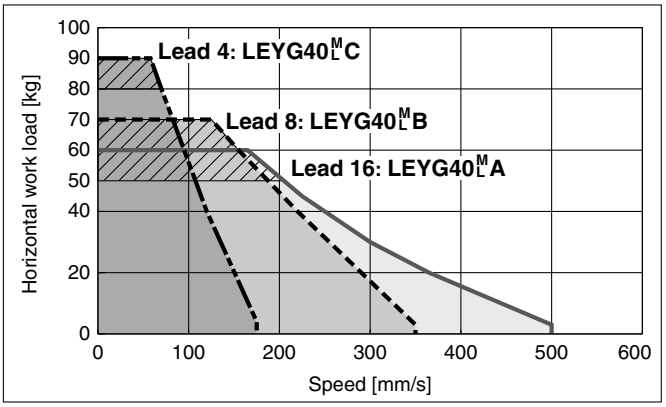

Vertical

LEYG16$^{M}_{L}$□

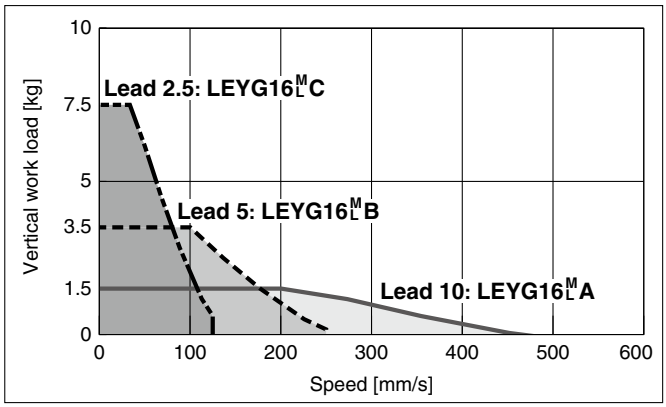

LEYG25$^{M}_{L}$□

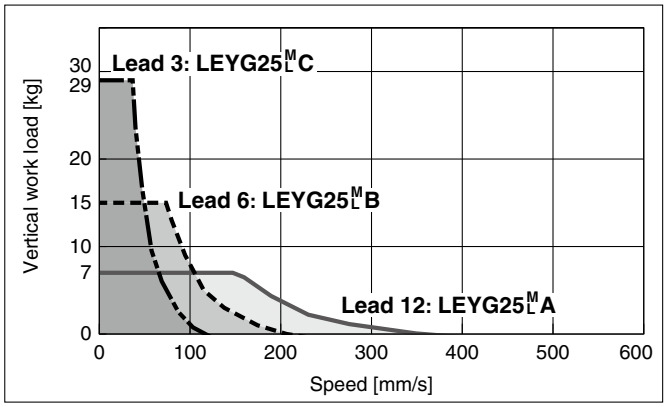

LEYG32$^{M}_{L}$□

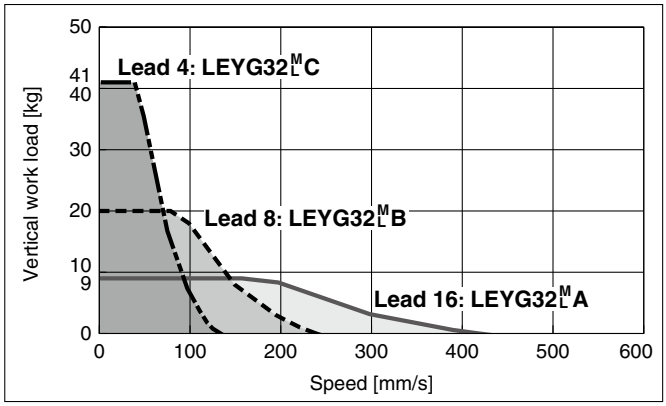

LEYG40$^{M}_{L}$□

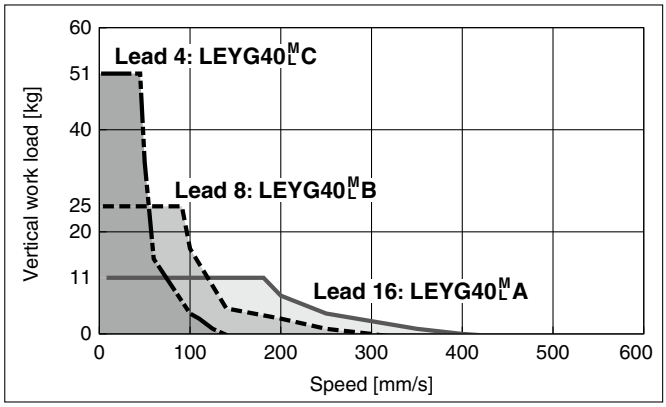

Speed–Work Load Graph (Guide)
For Step Motor (Servo/24 VDC) LECPA, JXC□$^{2}_{3}$

∗ These graphs show the work load when the external guide is used together. When using the LEYG alone, refer to pages 513 and 514.

Refer to page 515 for the JXC□1, LECP1 and page 517 for the LECA6.

Horizontal

LEYG16$^{M}_{L}$□ ▨ for acceleration/deceleration: 2000 mm/s²

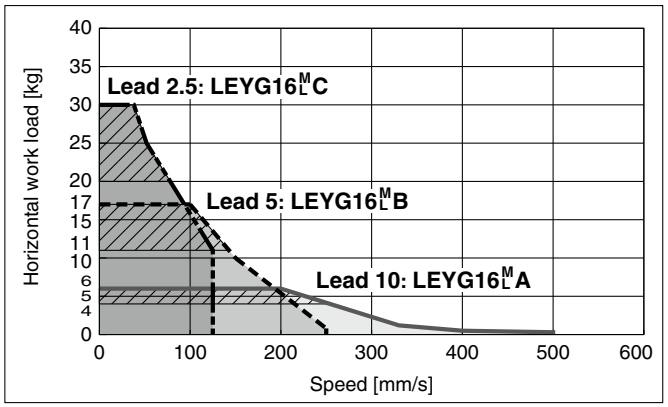

LEYG25$^{M}_{L}$□ ▨ for acceleration/deceleration: 2000 mm/s²

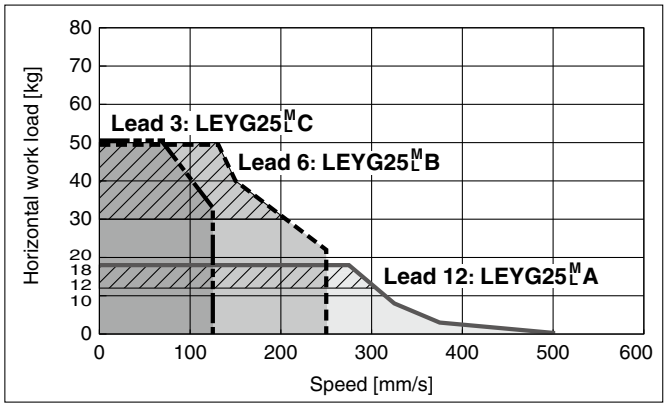

LEYG32$^{M}_{L}$□ ▨ for acceleration/deceleration: 2000 mm/s²

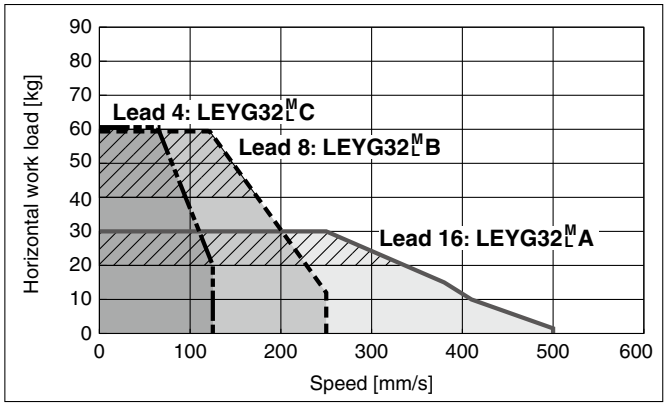

LEYG40$^{M}_{L}$□

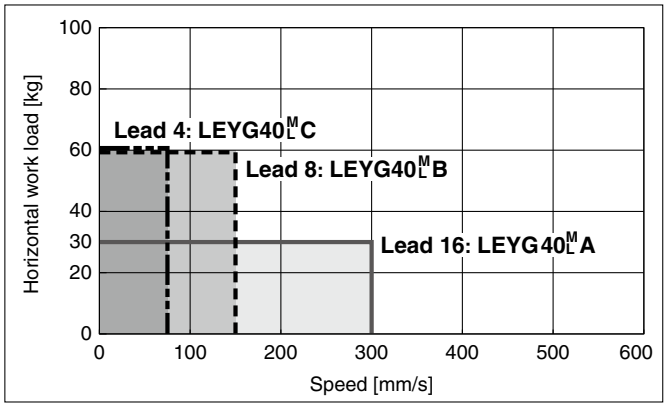

Vertical

LEYG16$^{M}_{L}$□

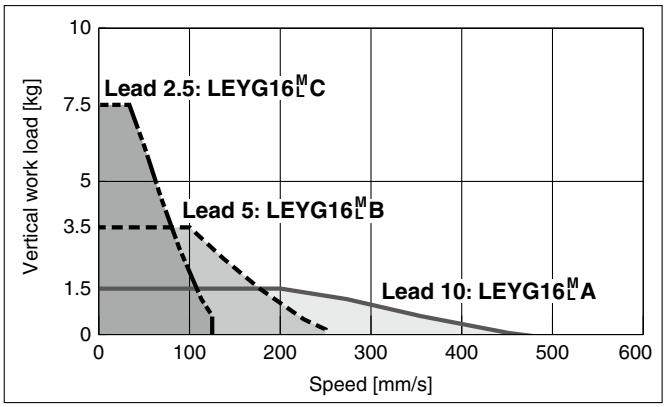

LEYG25$^{M}_{L}$□

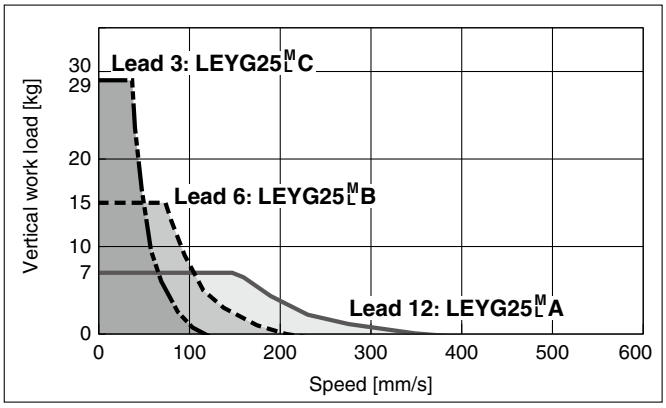

LEYG32$^{M}_{L}$□

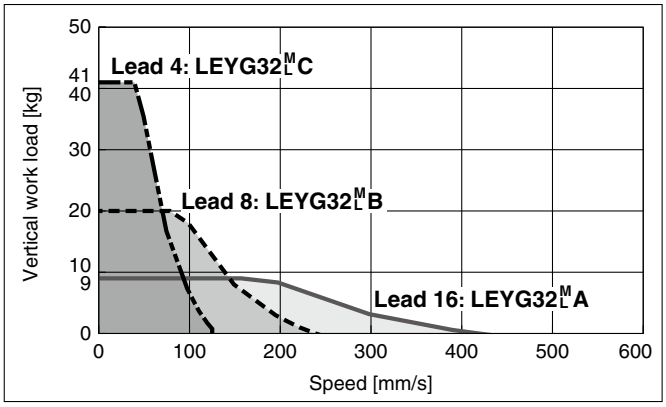

LEYG40$^{M}_{L}$□

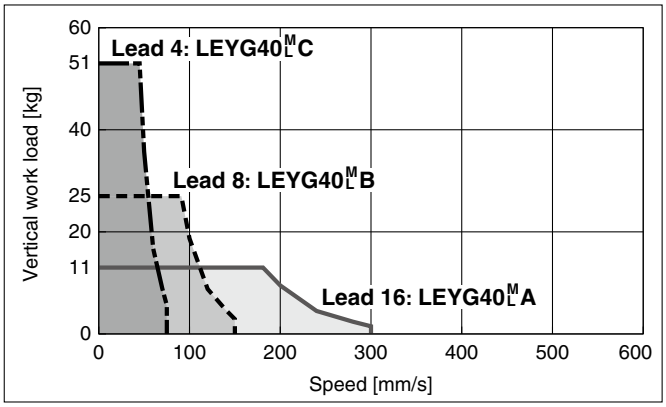

Refer to page 515 for the JXC□1, LECP1 and page 516 for the LECPA, JXC□$^{2}_{3}$.

Speed–Work Load Graph (Guide) For Servo Motor (24 VDC) LECA6

Horizontal

LEYG16$^{M}_{L}$□A

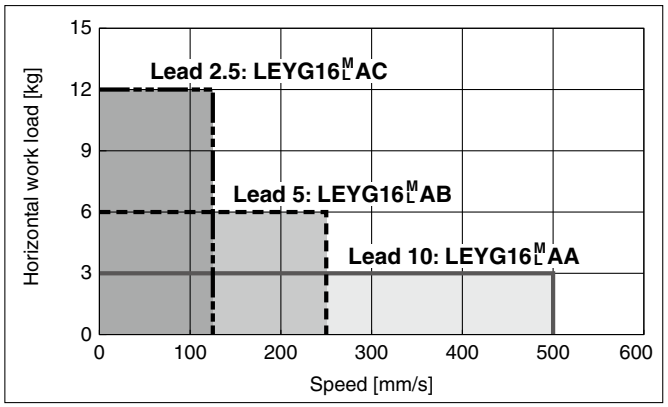

LEYG25$^{M}_{L}$□A

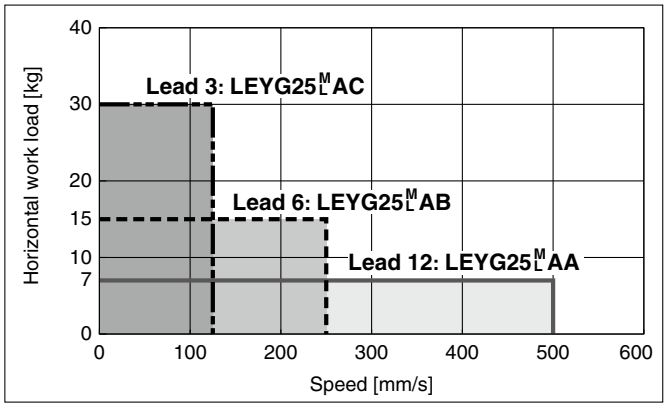

Vertical

LEYG16$^{M}_{L}$□A

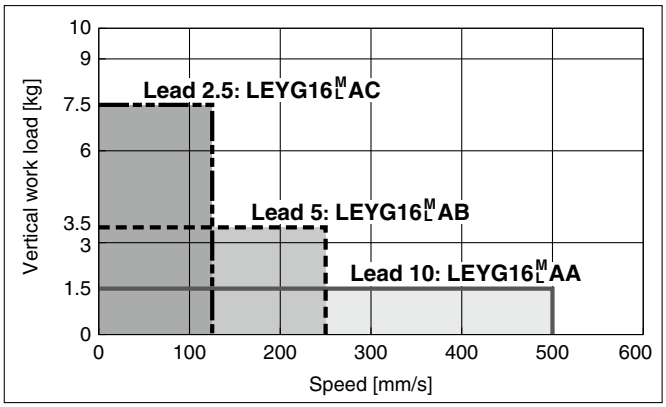

LEYG25$^{M}_{L}$□A

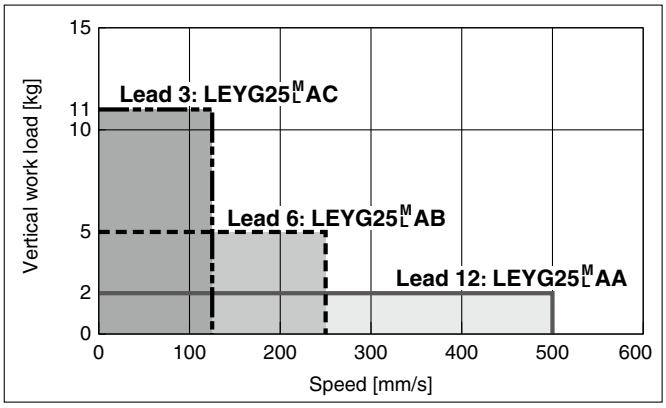

Force Conversion Graph (Guide)

Step Motor (Servo/24 VDC)

LEYG16$^{M}_{L}$□

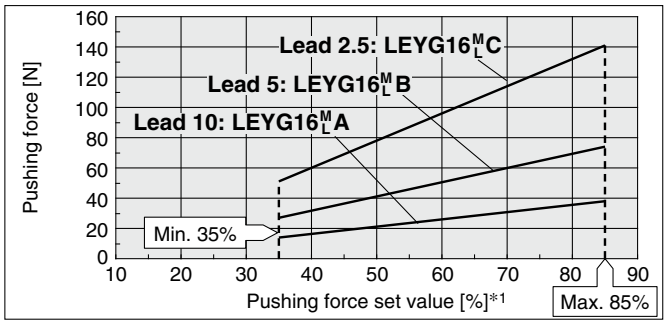

Ambient temperature	Pushing force set value [%]	Duty ratio [%]	Continuous pushing time [min]
25°C or less	85 or less	100	No restriction
40°C	40 or less	100	No restriction
	50	70	12 or less
	70	20	1.3 or less
	85	15	0.8 or less

LEYG25$^{M}_{L}$□

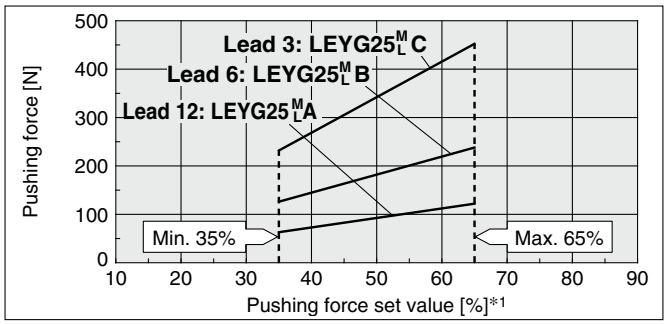

Ambient temperature	Pushing force set value [%]	Duty ratio [%]	Continuous pushing time [min]
40°C or less	65 or less	100	No restriction

LEYG32$^{M}_{L}$□

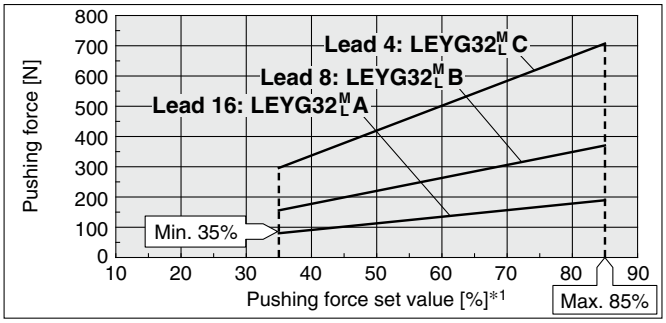

Ambient temperature	Pushing force set value [%]	Duty ratio [%]	Continuous pushing time [min]
25°C or less	85 or less	100	No restriction
40°C	65 or less	100	No restriction
	85	50	15 or less

LEYG40$^{M}_{L}$□

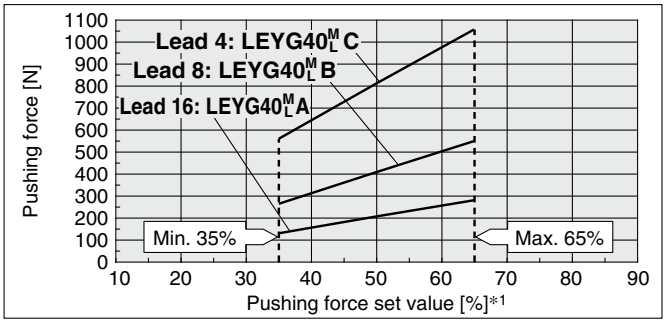

Ambient temperature	Pushing force set value [%]	Duty ratio [%]	Continuous pushing time [min]
40°C or less	65 or less	100	No restriction

*1 Set values for the controller

Servo Motor (24 VDC)

LEYG16$^{M}_{L}$A□

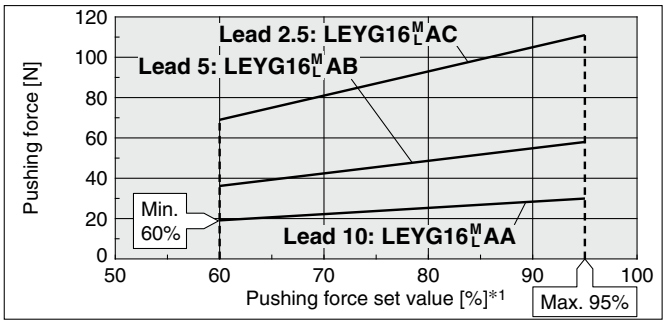

Ambient temperature	Pushing force set value [%]	Duty ratio [%]	Continuous pushing time [min]
40°C or less	95 or less	100	No restriction

LEYG25$^{M}_{L}$A□

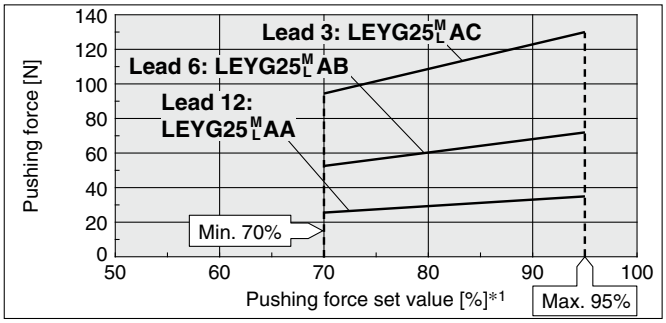

Ambient temperature	Pushing force set value [%]	Duty ratio [%]	Continuous pushing time [min]
40°C or less	95 or less	100	No restriction

<Limit Values for Pushing Force and Trigger Level in Relation to Pushing Speed>
Without Load

Model	Lead	Pushing speed [mm/s]	Pushing force (Setting input value)
LEYG16$^{M}_{L}$	A/B/C	21 to 50	60 to 85%
LEYG25$^{M}_{L}$	A/B/C	21 to 35	50 to 65%
LEYG32$^{M}_{L}$	A	24 to 30	60 to 85%
	B/C	21 to 30	
LEYG40$^{M}_{L}$	A	24 to 30	50 to 65%
	B/C	21 to 30	

Model	Lead	Pushing speed [mm/s]	Pushing force (Setting input value)
LEYG16$^{M}_{L}$□A	A/B/C	21 to 50	80 to 95%
LEYG25$^{M}_{L}$□A	A/B/C	21 to 35	80 to 95%

There is a limit to the pushing force in relation to the pushing speed. If the product is operated outside of the range (low pushing force), the completion signal [INP] may be output before the pushing operation has been completed (during the moving operation).
If operating with the pushing speed below the min. speed, please check for operating problems before using the product.

<Set Values for Vertical Upward Transfer Pushing Operations>

For vertical loads (upward), set the pushing force to the max. value shown below and operate at the work load or less.

Model	LEYG16$^{M}_{L}$□			LEYG25$^{M}_{L}$□			LEYG32$^{M}_{L}$□			LEYG40$^{M}_{L}$□			LEYG16$^{M}_{L}$□A			LEYG25$^{M}_{L}$□A		
Lead	A	B	C	A	B	C	A	B	C	A	B	C	A	B	C	A	B	C
Work load [kg]	0.5	1	2.5	1.5	4	9	2.5	7	16	5	12	26	0.5	1	2.5	0.5	1.5	4
Pushing force	85%			65%			85%			65%			95%			95%		

Allowable Rotational Torque of Plate

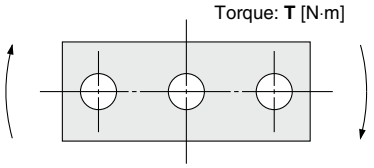

T [N·m]

Model	Stroke [mm]				
	30	50	100	200	300
LEYG16M	0.70	0.57	1.05	0.56	—
LEYG16L	0.82	1.48	0.97	0.57	—
LEYG25M	1.56	1.29	3.50	2.18	1.36
LEYG25L	1.52	3.57	2.47	2.05	1.44
LEYG32M	2.55	2.09	5.39	3.26	1.88
LEYG32L	2.80	5.76	4.05	3.23	2.32
LEYG40M	2.55	2.09	5.39	3.26	1.88
LEYG40L	2.80	5.76	4.05	3.23	2.32

Non-rotating Accuracy of Plate

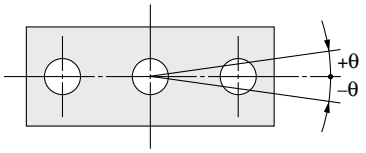

Size	Non-rotating accuracy θ	
	LEYG□M	**LEYG□L**
16	0.06°	0.05°
25		0.04°
32	0.05°	
40		

Plate Displacement: δ

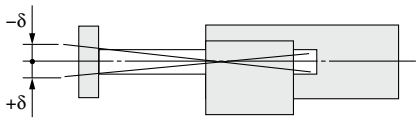

[mm]

Model	Stroke [mm]				
	30	**50**	**100**	**200**	**300**
LEYG16M	±0.20	±0.25	±0.24	±0.27	—
LEYG16L	±0.13	±0.12	±0.17	±0.19	—
LEYG25M	±0.26	±0.31	±0.25	±0.38	±0.36
LEYG25L	±0.13	±0.13	±0.17	±0.20	±0.23
LEYG32M	±0.23	±0.29	±0.23	±0.36	±0.34
LEYG32L	±0.11	±0.11	±0.15	±0.19	±0.22
LEYG40M	±0.23	±0.29	±0.23	±0.36	±0.34
LEYG40L	±0.11	±0.11	±0.15	±0.19	±0.22

∗ The values without a load are shown.

Model Selection

LEYG Series ▶p. 559 LECY□ Series ▶p. 567

Moment Load Graph

Selection conditions

		Vertical	Horizontal	
Mounting position		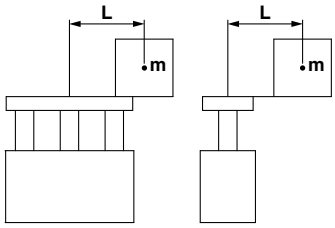	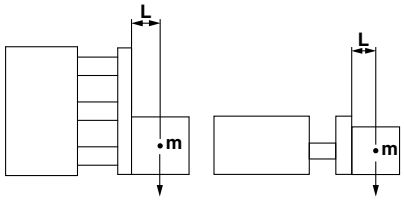	
Max. speed [mm/s]		"Speed–Vertical Work Load Graph"	200 or less	Over 200
Bearing	Sliding bearing	Graphs ①, ②	Graphs ⑤, ⑥*1	Graphs ⑦, ⑧
	Ball bushing bearing	Graphs ③, ④	Graphs ⑨, ⑩	Graphs ⑪, ⑫

*1 For the sliding bearing type, the speed is restricted with a horizontal/moment load.

Vertical Mounting, Sliding Bearing

① 70 mm stroke or less

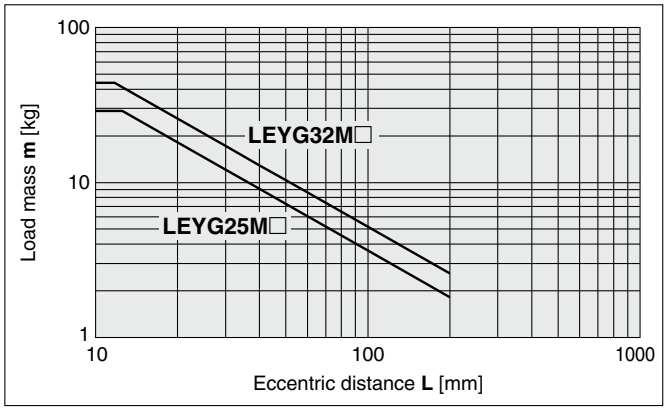

② Over 75 mm stroke

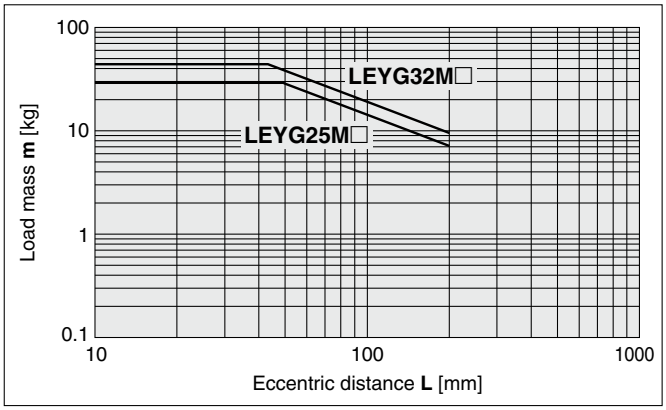

* The limit of vertical load mass varies depending on "lead" and "speed."
Check the "Speed–Vertical Work Load Graph" on page 523.

Vertical Mounting, Ball Bushing Bearing

③ 35 mm stroke or less

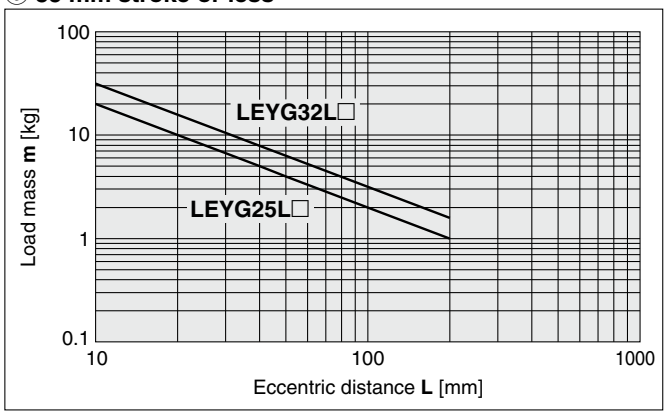

④ Over 40 mm stroke

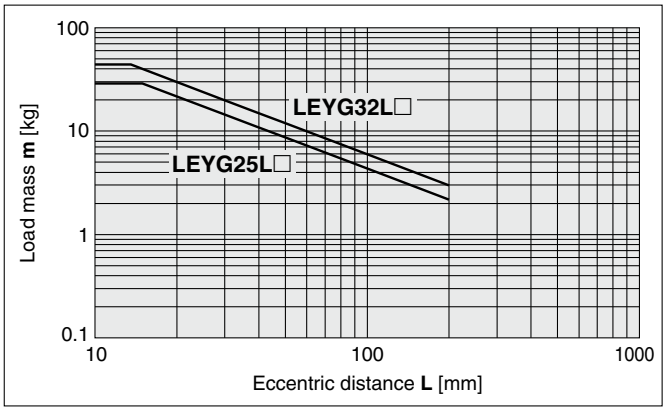

* The limit of vertical load mass varies depending on "lead" and "speed."
Check the "Speed–Vertical Work Load Graph" on page 523.

Moment Load Graph

Horizontal Mounting, Sliding Bearing

⑤ **L = 50 mm Max. speed = 200 mm/s or less**

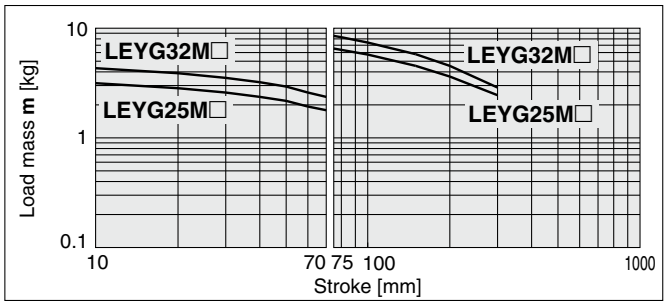

⑥ **L = 100 mm Max. speed = 200 mm/s or less**

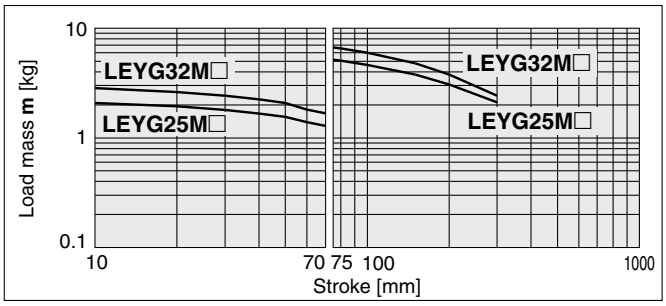

⑦ **L = 50 mm Max. speed = Over 200 mm/s**

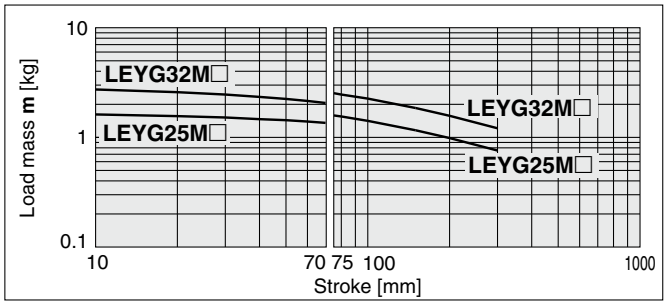

⑧ **L = 100 mm Max. speed = Over 200 mm/s**

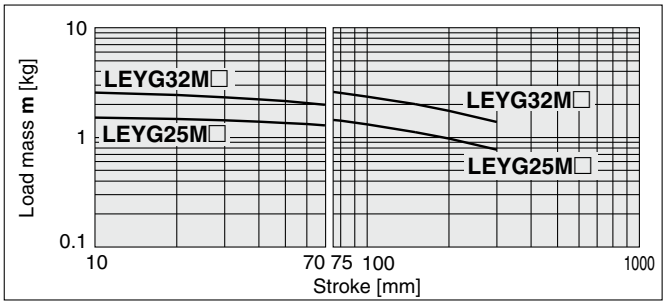

Horizontal Mounting, Ball Bushing Bearing

⑨ **L = 50 mm Max. speed = 200 mm/s or less**

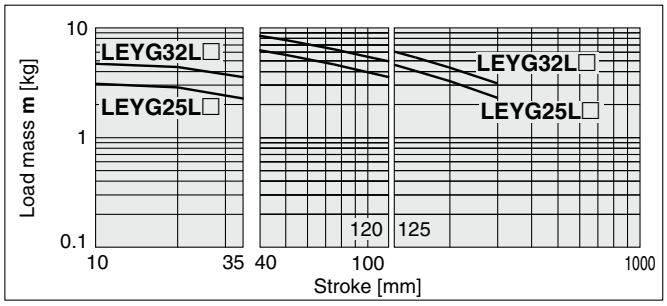

⑩ **L = 100 mm Max. speed = 200 mm/s or less**

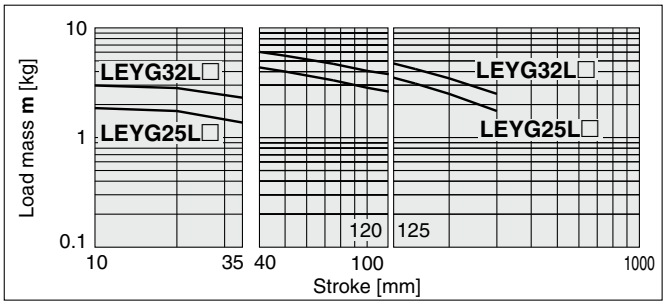

⑪ **L = 50 mm Max. speed = Over 200 mm/s**

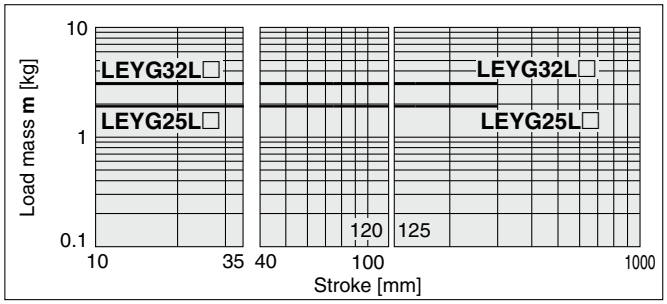

⑫ **L = 100 mm Max. speed = Over 200 mm/s**

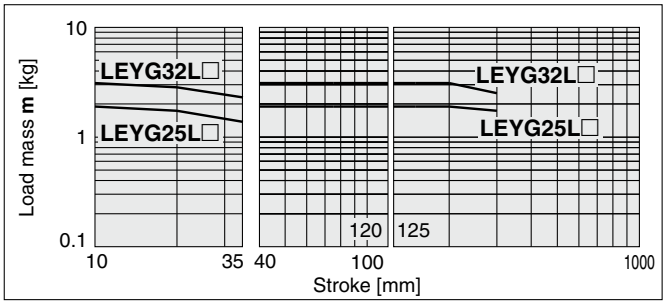

Operating Range when Used as a Stopper

LEYG□M (Sliding bearing)

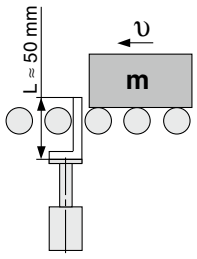

⚠Caution

Handling Precautions

- When used as a stopper, select a model with a stroke of 30 mm or less.
- LEYG□L (ball bushing bearing) cannot be used as a stopper.
- Workpiece collision in series with guide rod cannot be permitted (**Fig. a**).
- The body should not be mounted on the end. It must be mounted on the top or bottom (**Fig. b**).

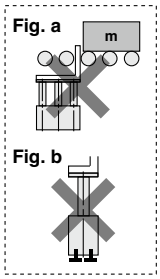

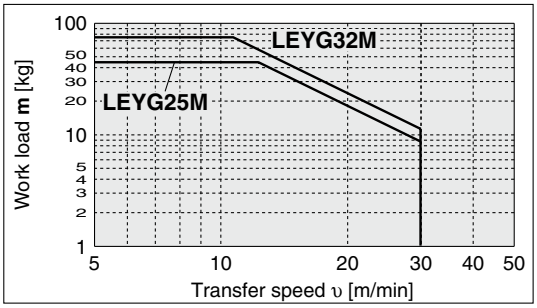

Speed–Vertical Work Load Graph/Required Conditions for the Regeneration Option

∗ These graphs show the work load when the external guide is used together. When using the LEYG alone, refer to pages 521 and 522.

LEYG25□S2/T6 (Motor mounting position: Parallel/In-line)

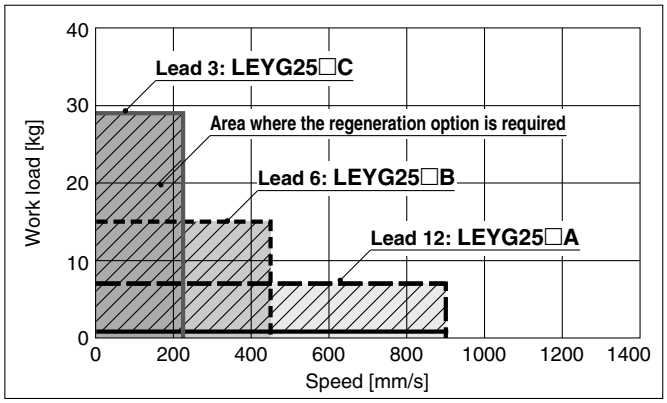

Required conditions for the regeneration option

∗ The regeneration option is required when using the product above the regeneration line in the graph. (It must be ordered separately.)

Regeneration Option Models

Size	Model
LEYG25□	LEC-MR-RB-032
LEYG32□	LEC-MR-RB-032

LEYG32S3/T7 (Motor mounting position: Parallel)

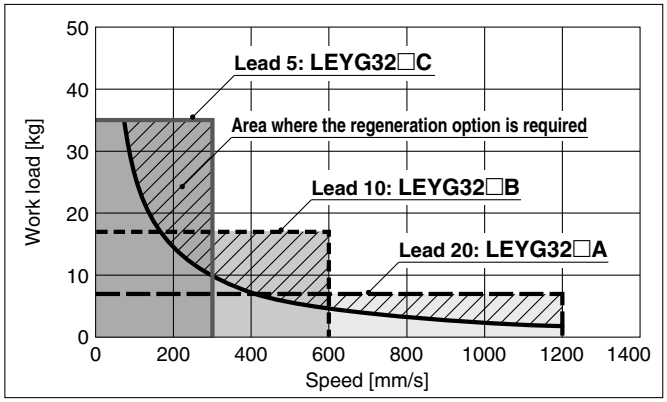

LEYG32DS3/T7 (Motor mounting position: In-line)

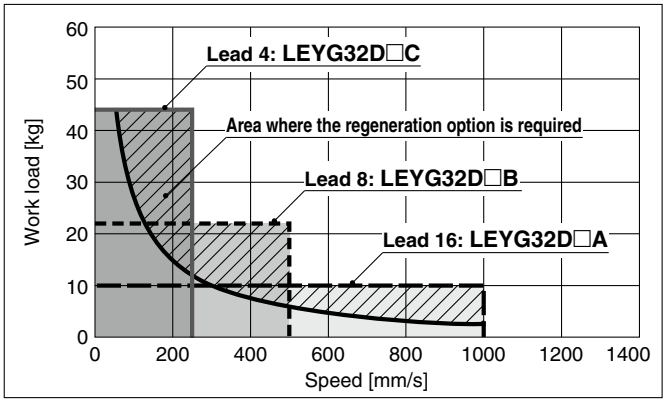

Speed–Horizontal Work Load Graph/Required Conditions for the Regeneration Option

∗ These graphs show the work load when the external guide is used together. When using the LEYG alone, refer to pages 521 and 522.

LEYG25□S2/T6 (Motor mounting position: Parallel/In-line)

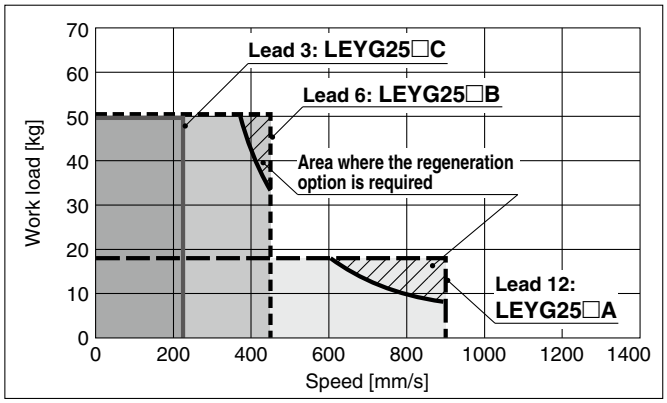

Required conditions for the regeneration option

∗ The regeneration option is required when using the product above the regeneration line in the graph. (It must be ordered separately.)

Regeneration Option Models

Size	Model
LEYG25□	LEC-MR-RB-032
LEYG32□	LEC-MR-RB-032

LEYG32S3/T7 (Motor mounting position: Parallel)

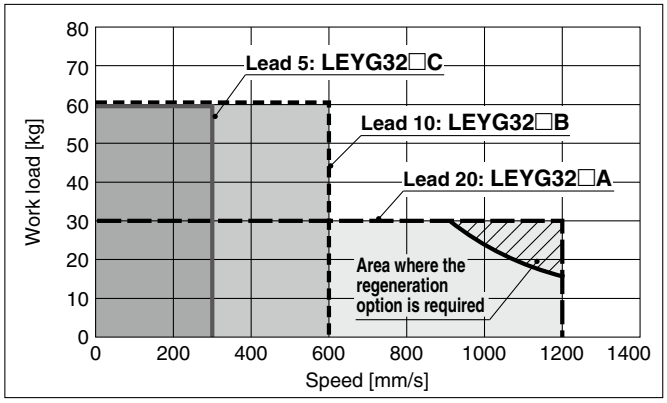

LEYG32DS3/T7 (Motor mounting position: In-line)

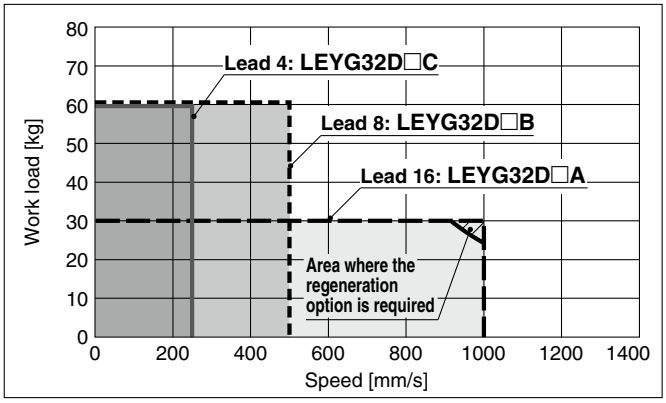

Force Conversion Graph: LECSA

LEYG25□S2 (Motor mounting position: Parallel/In-line)

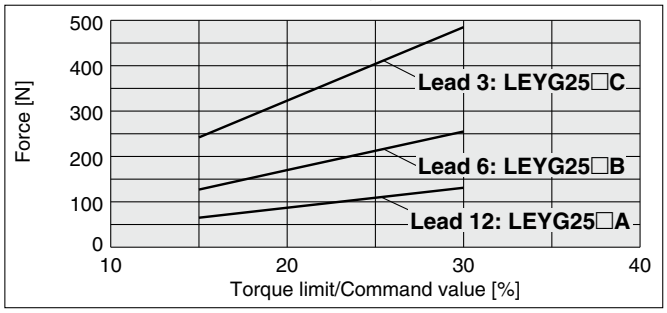

Torque limit/Command value [%]	Duty ratio [%]	Continuous pushing time [min]
25 or less	100	No restriction
30	60	1.5 or less

LEYG32S3 (Motor mounting position: Parallel)

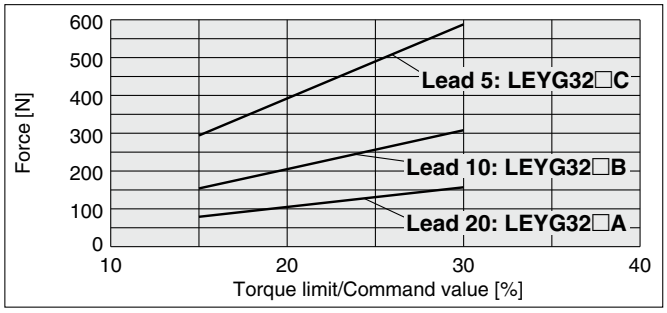

Torque limit/Command value [%]	Duty ratio [%]	Continuous pushing time [min]
25 or less	100	No restriction
30	60	1.5 or less

LEYG32DS3 (Motor mounting position: In-line)

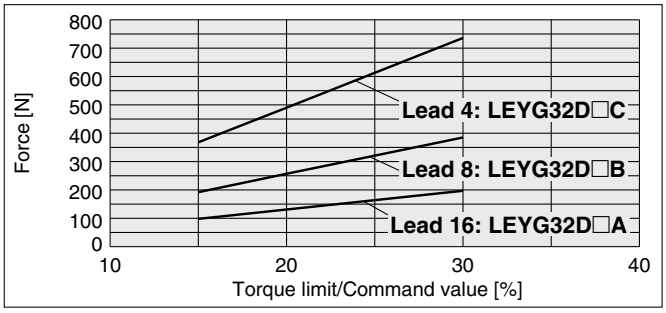

Torque limit/Command value [%]	Duty ratio [%]	Continuous pushing time [min]
25 or less	100	No restriction
30	60	1.5 or less

Force Conversion Graph: LECSS-T

LEYG25□T6 (Motor mounting position: Parallel/In-line)

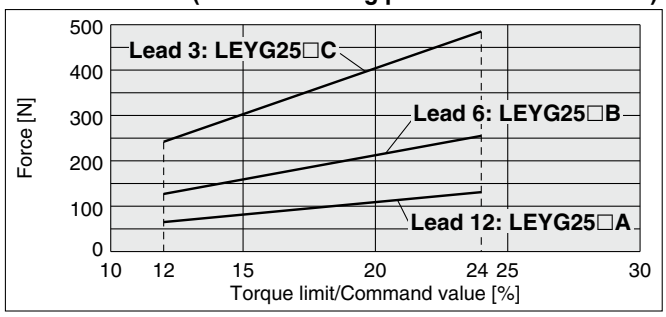

Torque limit/Command value [%]	Duty ratio [%]	Continuous pushing time [min]
20 or less	100	No restriction
24	60	1.5 or less

LEYG32T7 (Motor mounting position: Parallel)

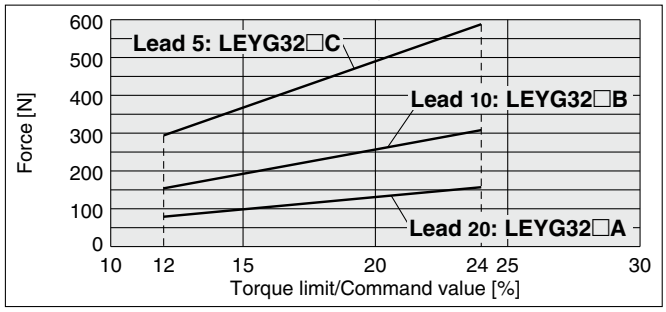

Torque limit/Command value [%]	Duty ratio [%]	Continuous pushing time [min]
20 or less	100	No restriction
24	60	1.5 or less

LEYG32DT7 (Motor mounting position: In-line)

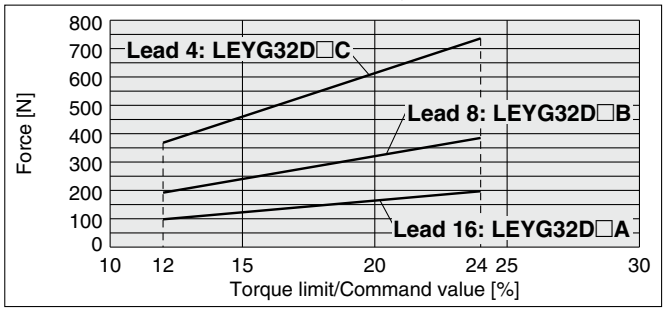

Torque limit/Command value [%]	Duty ratio [%]	Continuous pushing time [min]
20 or less	100	No restriction
24	60	1.5 or less

Allowable Rotational Torque of Plate

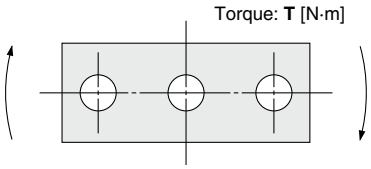

T [N·m]

Model	Stroke [mm]				
	30	**50**	**100**	**200**	**300**
LEYG25M	1.56	1.29	3.50	2.18	1.36
LEYG25L	1.52	3.57	2.47	2.05	1.44
LEYG32M	2.55	2.09	5.39	3.26	1.88
LEYG32L	2.80	5.76	4.05	3.23	2.32

Non-rotating Accuracy of Plate

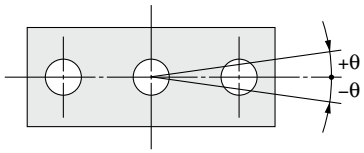

Size	Non-rotating accuracy θ	
	LEYG□M	**LEYG□L**
25	0.06°	0.04°
32	0.05°	

Plate Displacement: δ

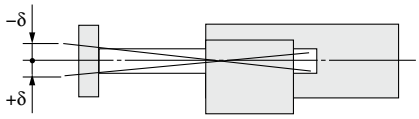

[mm]

Model	Stroke [mm]				
	30	**50**	**100**	**200**	**300**
LEYG25M	±0.26	±0.31	±0.25	±0.38	±0.36
LEYG25L	±0.13	±0.13	±0.17	±0.20	±0.23
LEYG32M	±0.23	±0.29	±0.23	±0.36	±0.34
LEYG32L	±0.11	±0.11	±0.15	±0.19	±0.22

∗ The values without a load are shown.

Model Selection

LEYG Series ▶p. 567 LECS□ Series ▶p. 559

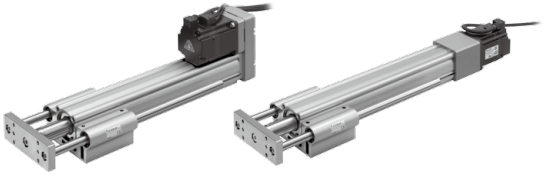

Moment Load Graph

Selection conditions

		Vertical	Horizontal	
Mounting position		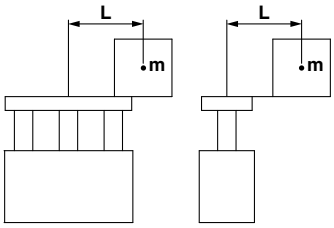	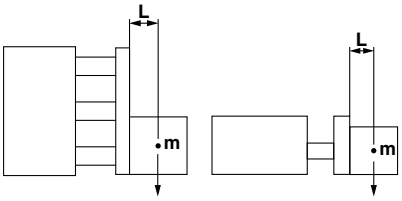	
Max. speed [mm/s]		"Speed–Work Load Graph"	200 or less	Over 200
Bearing	Sliding bearing	Graphs ①, ②	Graphs ⑤, ⑥*1	Graphs ⑦, ⑧
	Ball bushing bearing	Graphs ③, ④	Graphs ⑨, ⑩	Graphs ⑪, ⑫

*1 For the sliding bearing type, the speed is restricted with a horizontal/moment load.

Vertical Mounting, Sliding Bearing

① **70 mm stroke or less**

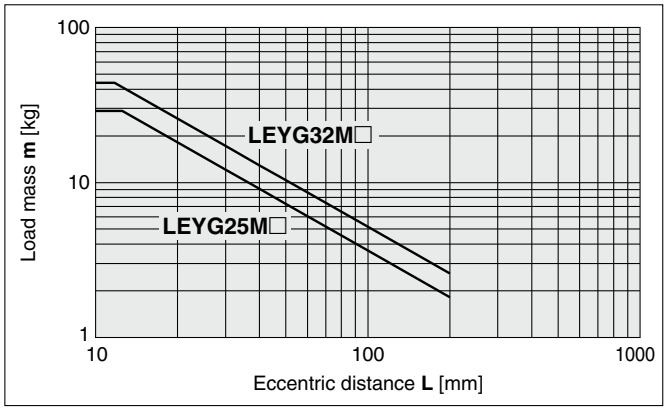

② **Over 75 mm stroke**

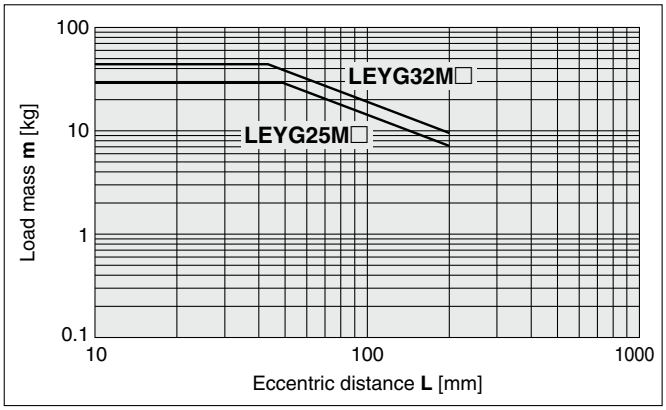

* The limit of vertical load mass varies depending on "lead" and "speed."
Check the "Speed–Work Load Graph" on page 529.

Vertical Mounting, Ball Bushing Bearing

③ **35 mm stroke or less**

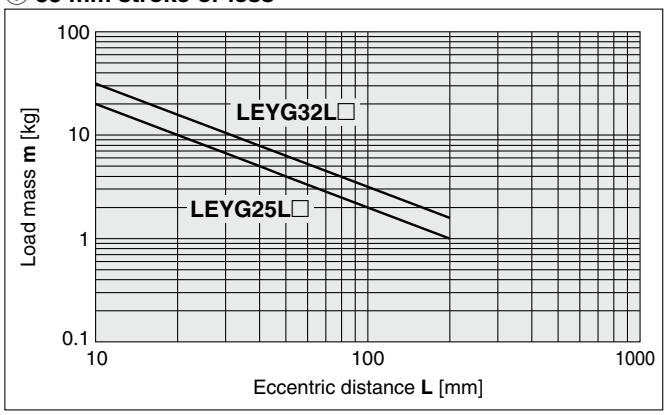

④ **Over 40 mm stroke**

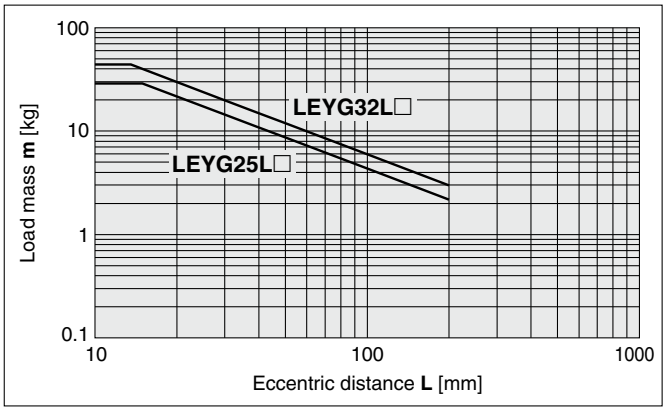

* The limit of vertical load mass varies depending on "lead" and "speed."
Check the "Speed–Work Load Graph" on page 529.

Moment Load Graph

Horizontal Mounting, Sliding Bearing

⑤ **L = 50 mm Max. speed = 200 mm/s or less**

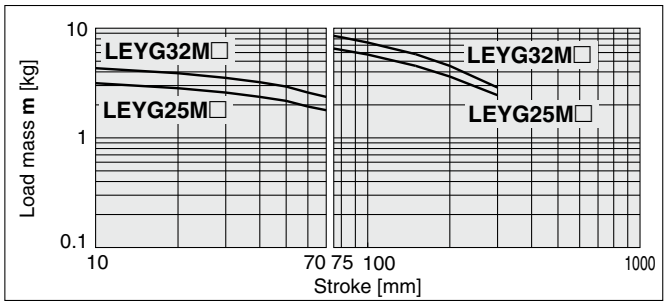

⑥ **L = 100 mm Max. speed = 200 mm/s or less**

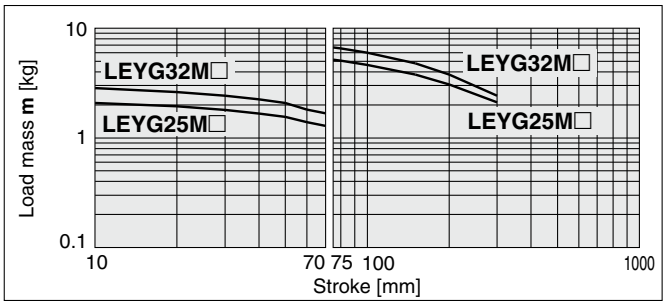

⑦ **L = 50 mm Max. speed = Over 200 mm/s**

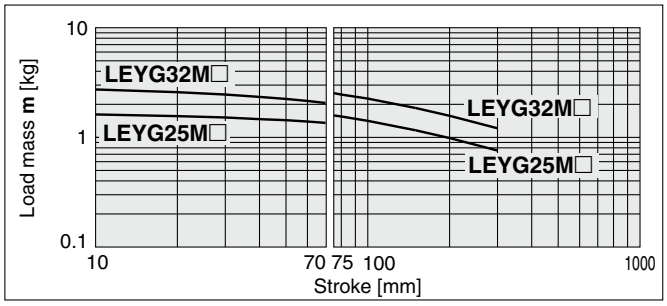

⑧ **L = 100 mm Max. speed = Over 200 mm/s**

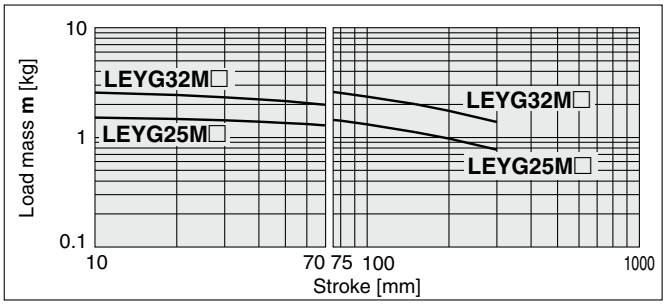

Horizontal Mounting, Ball Bushing Bearing

⑨ **L = 50 mm Max. speed = 200 mm/s or less**

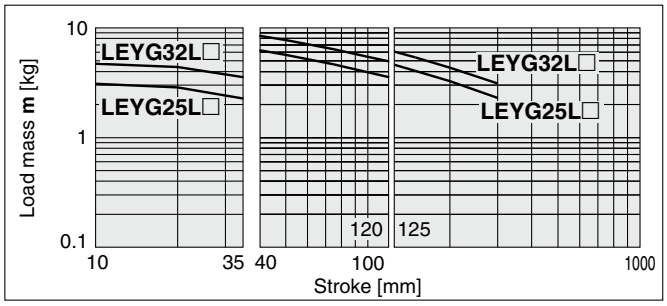

⑩ **L = 100 mm Max. speed = 200 mm/s or less**

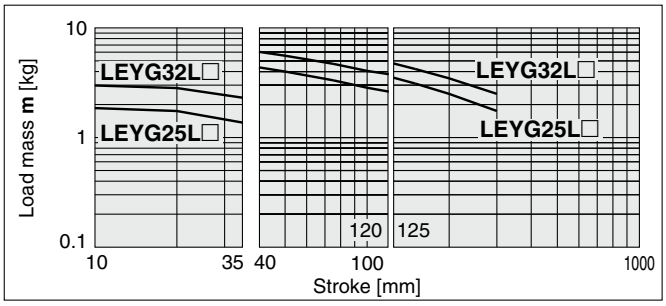

⑪ **L = 50 mm Max. speed = Over 200 mm/s**

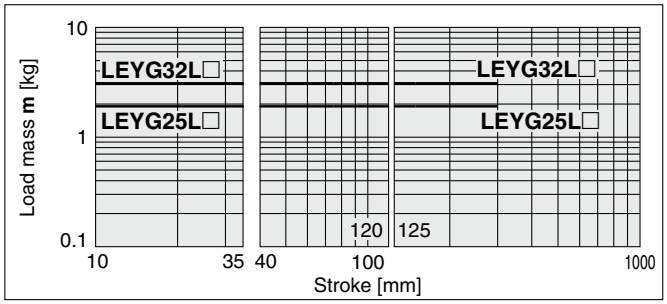

⑫ **L = 100 mm Max. speed = Over 200 mm/s**

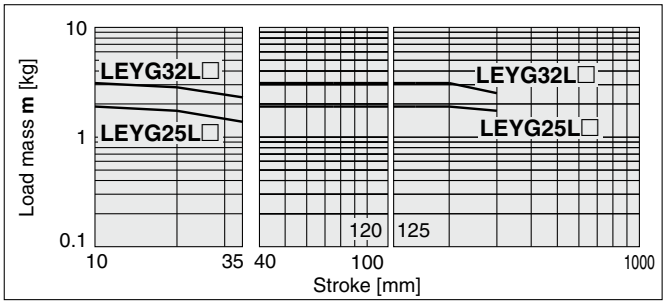

Operating Range when Used as a Stopper

LEYG□M (Sliding bearing)

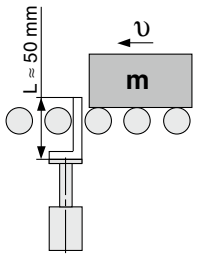

⚠Caution

Handling Precautions

- When used as a stopper, select a model with a stroke of 30 mm or less.
- LEYG□L (ball bushing bearing) cannot be used as a stopper.
- Workpiece collision in series with guide rod cannot be permitted (**Fig. a**).
- The body should not be mounted on the end. It must be mounted on the top or bottom (**Fig. b**).

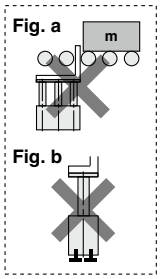

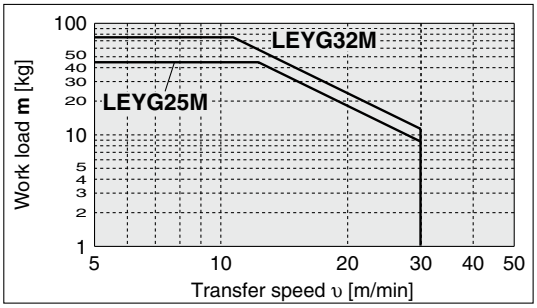

Speed–Work Load Graph/Required Conditions for the Regenerative Resistor (Guide)

∗ These graphs show the work load when the external guide is used together. When using the LEYG alone, refer to pages 527 and 528.

LEYG25□V6 (Motor mounting position: Parallel/In-line)

Vertical

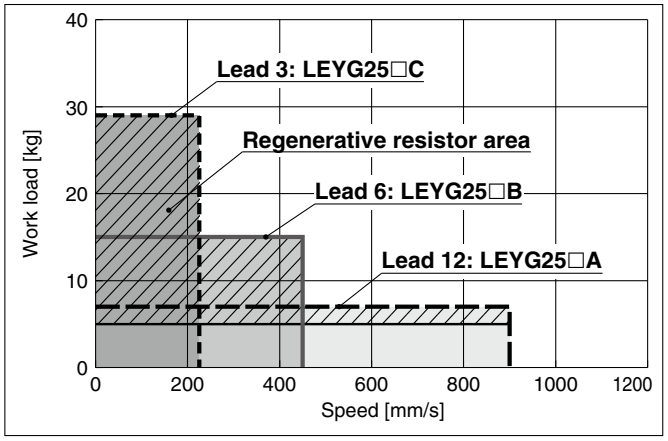

Horizontal

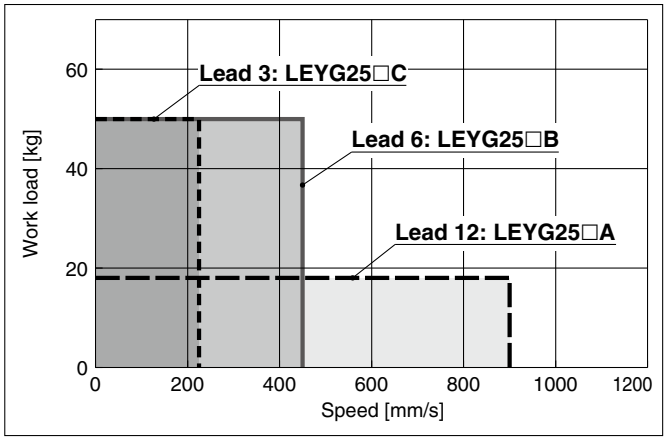

LEYG32V7 (Motor mounting position: Parallel)

Vertical

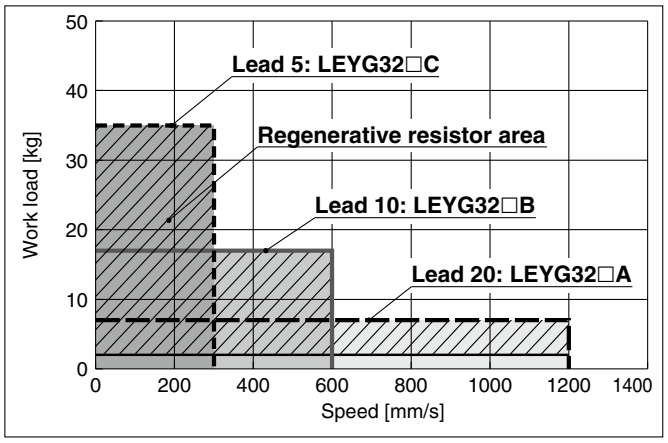

Horizontal

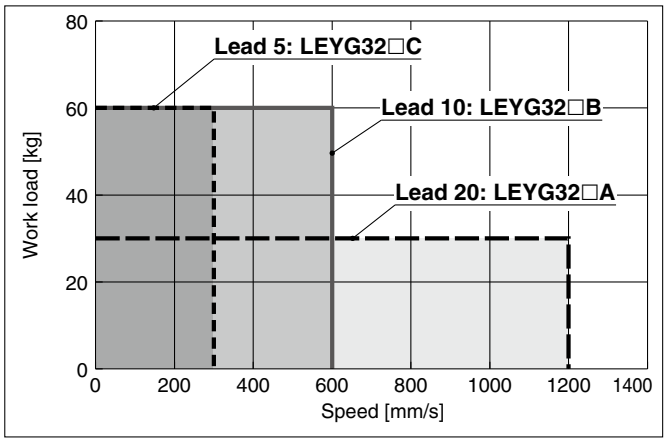

LEYG32DV7 (Motor mounting position: In-line)

Vertical

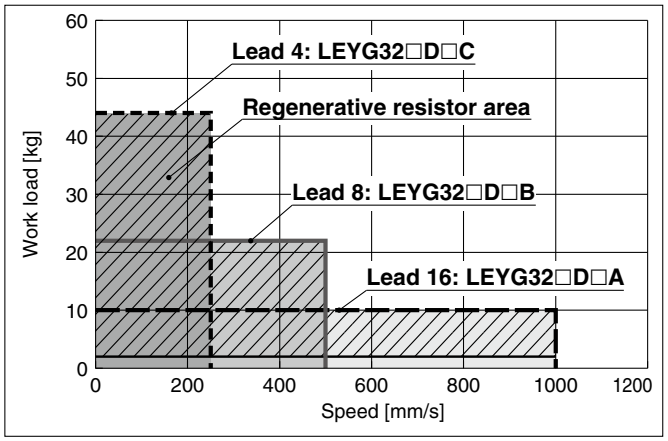

Horizontal

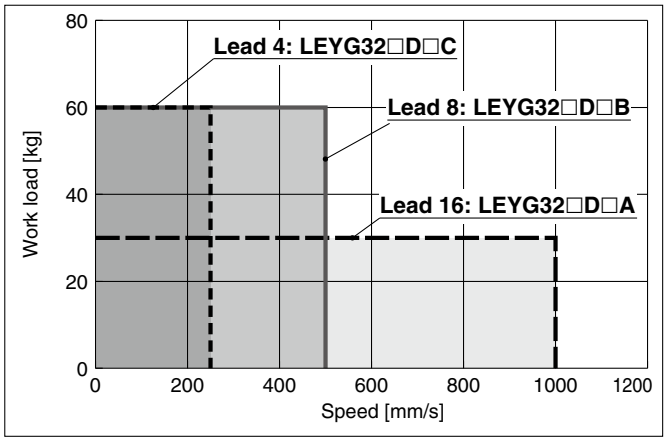

Regenerative resistor area

∗ When using the actuator in the regenerative resistor area, download the "AC servo drive capacity selection program/SigmaJunmaSize+" from the SMC website. Then, calculate the necessary regenerative resistor capacity to prepare an appropriate external regenerative resistor.

∗ The regenerative resistor should be provided by the customer.

Applicable Motors/Drivers

Model	Applicable model	
	Motor	Servopack (SMC driver)
LEYG25□	SGMJV-01A3A	SGDV-R90A11□ (LECYM2-V5) SGDV-R90A21□ (LECYU2-V5)
LEYG32□	SGMJV-02A3A	SGDV-1R6A11□ (LECYM2-V7) SGDV-1R6A21□ (LECYU2-V7)

Force Conversion Graph

LEYG25□V6 (Motor mounting position: Parallel/In-line)

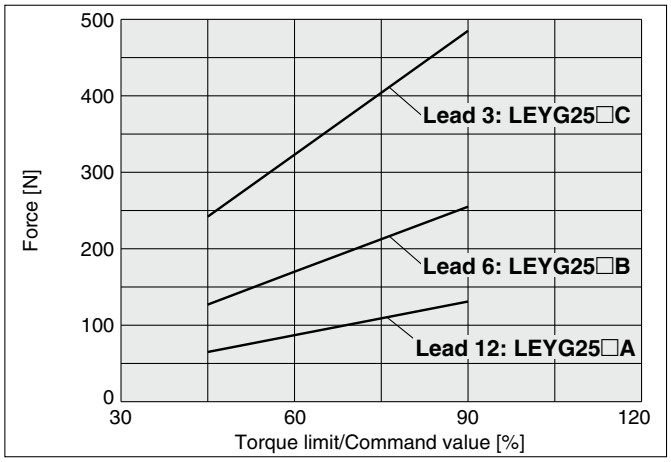

Torque limit/Command value [%]	Duty ratio [%]	Continuous pushing time [min]
75 or less	100	No restriction
90	60	1.5 or less

LEYG32□V7 (Motor mounting position: Parallel)

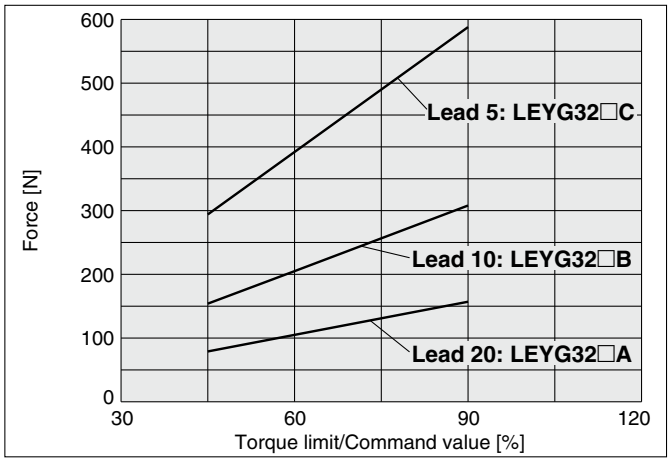

Torque limit/Command value [%]	Duty ratio [%]	Continuous pushing time [min]
75 or less	100	No restriction
90	60	1.5 or less

LEYG32DV7 (Motor mounting position: In-line)

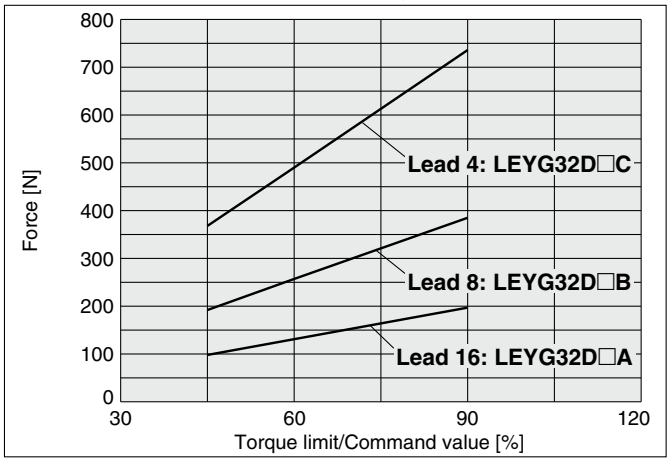

Torque limit/Command value [%]	Duty ratio [%]	Continuous pushing time [min]
75 or less	100	No restriction
90	60	1.5 or less

Allowable Rotational Torque of Plate: T

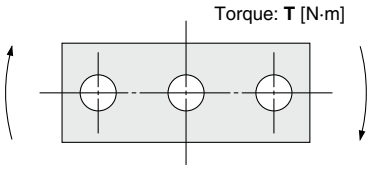

T [N·m]

Model	Stroke [mm]				
	30	**50**	**100**	**200**	**300**
LEYG25M	1.56	1.29	3.50	2.18	1.36
LEYG25L	1.52	3.57	2.47	2.05	1.44
LEYG32M	2.55	2.09	5.39	3.26	1.88
LEYG32L	2.80	5.76	4.05	3.23	2.32

Non-rotating Accuracy of Plate: θ

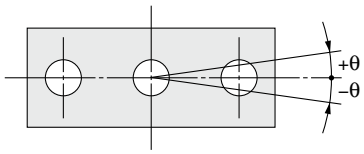

Size	Non-rotating accuracy θ	
	LEYG□M	**LEYG□L**
25	0.06°	0.04°
32	0.05°	

Plate Displacement: δ

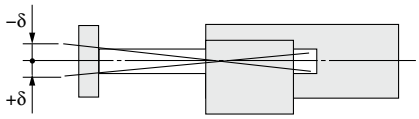

[mm]

Model	Stroke [mm]				
	30	**50**	**100**	**200**	**300**
LEYG25M	±0.26	±0.31	±0.25	±0.38	±0.36
LEYG25L	±0.13	±0.13	±0.17	±0.20	±0.23
LEYG32M	±0.23	±0.29	±0.23	±0.36	±0.34
LEYG32L	±0.11	±0.11	±0.15	±0.19	±0.22

∗ The values without a load are shown.

Battery-less Absolute (Step Motor 24 VDC)

Guide Rod Type

LEYG Series LEYG16, 25, 32, 40

CE UKCA RoHS

* For details, refer to page 1343 and onward.

How to Order

LEYG 25 M ☐ E B – 50 C ☐ – R1 CD17T

❶ ❷ ❸ ❹ ❺ ❻ ❼ ❽ ❾ ❿

For details on controllers, refer to the next page.

❶ Size

16
25
32
40

❷ Bearing type*1

M	Sliding bearing
L	Ball bushing bearing

❸ Motor mounting position/Motor cover direction

Symbol	Motor mounting position	Motor cover direction
Nil	Top side parallel	—
D	In-line	—*2
D1		Left*3
D2		Right*3
D3		Top*3
D4		Bottom*3

❹ Motor type

E	Battery-less absolute (Step motor 24 VDC)

❺ Lead [mm]

Symbol	LEYG16	LEYG25	LEYG32/40
A	10	12	16
B	5	6	8
C	2.5	3	4

❻ Stroke*4 *5 [mm]

Stroke	Note	
	Size	Applicable stroke
30 to 200	16	30, 50, 100, 150, 200
30 to 300	25/32/40	30, 50, 100, 150, 200, 250, 300

❼ Motor option*6

C	With motor cover
W	With lock/motor cover

❽ Guide option*7

Nil	Without option
F	With grease retaining function

❾ Actuator cable type/length

Robotic cable [m]

Nil	None	R8	8*8
R1	1.5	RA	10*8
R3	3	RB	15*8
R5	5	RC	20*8

For details on auto switches, refer to pages 503 to 505.

Use of auto switches for the guide rod type LEYG series
- Auto switches must be inserted from the front side with the rod (plate) sticking out.
- Auto switches cannot be fixed with the parts hidden behind the guide attachment (the side of the rod that sticks out).
- Please consult with SMC when using auto switches on the side of the rod that sticks out, as it is produced as a special order.

⑩ Controller

Nil	Without controller
C□1□□	With controller

C D 1 7 T

Interface (Communication protocol/Input/Output)

Symbol	Type	Number of axes, Special specification: Standard	With STO sub-function
5	Parallel input (NPN)	●	
6	Parallel input (PNP)	●	
E	EtherCAT	●	●
9	EtherNet/IP™	●	●
P	PROFINET	●	●
D	DeviceNet®	●	
L	IO-Link	●	●
M	CC-Link	●	

Mounting

7	Screw mounting
8∗9	DIN rail

Number of axes, Special specification

Symbol	Number of axes	Specification
1	Single axis	Standard
F	Single axis	With STO sub-function

Communication plug connector, I/O cable∗10

Symbol	Type	Applicable interface
Nil	Without accessory	—
S	Straight type communication plug connector	DeviceNet® CC-Link Ver. 1.10
T	T-branch type communication plug connector	
1	I/O cable (1.5 m)	Parallel input (NPN) Parallel input (PNP)
3	I/O cable (3 m)	
5	I/O cable (5 m)	

∗1 When [M: Sliding bearing] is selected, the maximum speed of lead [A] is 400 mm/s (at no-load, horizontal mounting). The speed is also restricted with a horizontal/moment load. Refer to the "Model Selection" on page 507.
∗2 Sizes 25, 32, and 40 only
∗3 Size 16 only
∗4 Please contact SMC for non-standard strokes as they are produced as special orders.
∗5 There is a limit for mounting size 16/32/40 top side parallel motor types and strokes of 50 mm or less. Refer to the dimensions.
∗6 When "With lock/motor cover" is selected for the top side parallel motor type, the motor body will stick out from the end of the body for size 16 with strokes of 50 mm or less and size 40 with strokes of 30 mm or less. Check for interference with workpieces before selecting a model.
∗7 Only available for size 25, 32, and 40 sliding bearings (Refer to the "Construction" on page 538.)
∗8 Produced upon receipt of order
∗9 The DIN rail is not included. It must be ordered separately.
∗10 Select "Nil" for anything other than DeviceNet®, CC-Link, or parallel input.
Select "Nil," "S," or "T" for DeviceNet® or CC-Link.
Select "Nil," "1," "3," or "5" for parallel input.

⚠Caution

[CE/UKCA-compliant products]
EMC compliance was tested by combining the electric actuator LEY series and the controller JXC series.
The EMC depends on the configuration of the customer's control panel and the relationship with other electrical equipment and wiring. Therefore, compliance with the EMC directive cannot be certified for SMC components incorporated into the customer's equipment under actual operating conditions. As a result, it is necessary for the customer to verify compliance with the EMC directive for the machinery and equipment as a whole.

[Precautions relating to differences in controller versions]
When the JXC series is to be used in combination with the battery-less absolute encoder, use a controller that is version V3.4 or S3.4 or higher. For details, refer to pages 1077 and 1078.

[UL certification]
The JXC series controllers used in combination with electric actuators are UL certified.

The actuator and controller are sold as a package.

Confirm that the combination of the controller and actuator is correct.

<Check the following before use.>

① Check the actuator label for the model number. This number should match that of the controller.
② Check that the Parallel I/O configuration matches (NPN or PNP).

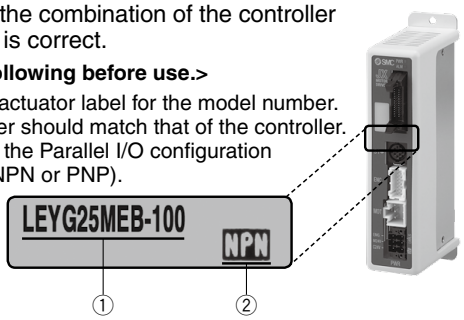

∗ Refer to the Operation Manual for using the products.
Please download it via our website: https://www.smcworld.com

Type	Step data input type	EtherCAT direct input type	EtherCAT direct input type with STO sub-function	EtherNet/IP™ direct input type	EtherNet/IP™ direct input type with STO sub-function	PROFINET direct input type	PROFINET direct input type with STO sub-function	DeviceNet® direct input type	IO-Link direct input type	IO-Link direct input type with STO sub-function	CC-Link direct input type
Series	**JXC51 JXC61**	**JXCE1**	**JXCEF**	**JXC91**	**JXC9F**	**JXCP1**	**JXCPF**	**JXCD1**	**JXCL1**	**JXCLF**	**JXCM1**
Features	Parallel I/O	EtherCAT direct input	EtherCAT direct input with STO sub-function	EtherNet/IP™ direct input	EtherNet/IP™ direct input with STO sub-function	PROFINET direct input	PROFINET direct input with STO sub-function	DeviceNet® direct input	IO-Link direct input	IO-Link direct input with STO sub-function	CC-Link direct input
Compatible motor	Battery-less absolute (Step motor 24 VDC)										
Max. number of step data	64 points										
Power supply voltage	24 VDC										
Reference page	1017	1063									

Specifications

Battery-less Absolute (Step Motor 24 VDC)

Model				LEYG16$^{M}_{L}$□E			LEYG25$^{M}_{L}$□E			LEYG32$^{M}_{L}$□E			LEYG40$^{M}_{L}$□E		
Actuator specifications	Work load [kg]*1	Horizontal	Acceleration/Deceleration at 3000 [mm/s²]	6	17	30	20	40	60	30	45	60	50	60	80
			Acceleration/Deceleration at 2000 [mm/s²]	10	23	35	30	55	70	40	60	80	60	70	90
		Vertical	Acceleration/Deceleration at 3000 [mm/s²]	1.5	3.5	7.5	7	15	29	9	20	41	11	25	51
	Pushing force [N]*2 *3 *4			14 to 38	27 to 74	51 to 141	63 to 122	126 to 238	232 to 452	80 to 189	156 to 370	296 to 707	132 to 283	266 to 553	562 to 1058
	Speed [mm/s]*4			15 to 500	8 to 250	4 to 125	18 to 500	9 to 250	5 to 125	24 to 500	12 to 300	6 to 150	24 to 500	12 to 300	6 to 150
	Max. acceleration/deceleration [mm/s²]			3000											
	Pushing speed [mm/s]*5			50 or less			35 or less			30 or less			30 or less		
	Positioning repeatability [mm]			±0.02											
	Lost motion [mm]*6			0.1 or less											
	Screw lead [mm]			10	5	2.5	12	6	3	16	8	4	16	8	4
	Impact/Vibration resistance [m/s²]*7			50/20											
	Actuation type			Ball screw + Belt (LEYG□□), Ball screw (LEYG□□D)											
	Guide type			Sliding bearing (LEYG□M), Ball bushing bearing (LEYG□L)											
	Operating temp. range [°C]			5 to 40											
	Operating humidity range [%RH]			90 or less (No condensation)											
	Enclosure			IP40											
Electric specifications	Motor size			□28			□42			□56.4			□56.4		
	Motor type			Battery-less absolute (Step motor 24 VDC)											
	Encoder			Battery-less absolute											
	Power supply voltage [V]			24 VDC ±10%											
	Power [W]*8 *10			Max. power 43			Max. power 48			Max. power 104			Max. power 106		
Lock unit specifications	Type*9			Non-magnetizing lock											
	Holding force [N]			20	39	78	78	157	294	108	216	421	127	265	519
	Power [W]*10			2.9			5			5			5		
	Rated voltage [V]			24 VDC ±10%											

*1 Horizontal: An external guide is necessary to support the load (Friction coefficient of guide: 0.1 or less). The actual work load and transfer speed change according to the condition of the external guide. Also, speed changes according to the work load. Check the "Model Selection" on pages 507 to 509.
Vertical: Speed changes according to the work load. Check the "Model Selection" on pages 507 to 509.
Set the acceleration/deceleration values to be 3000 [mm/s²] or less.
*2 Pushing force accuracy is ±20% (F.S.).
*3 The pushing force values for LEYG16□□E are 20% to 65%, for LEYG25□□E are 30% to 50%, for LEYG32□□E are 30% to 70%, and for LEYG40□□E are 35% to 65%.
The pushing force values change according to the duty ratio and pushing speed. Check the "Model Selection" on page 510.
*4 The speed and force may change depending on the cable length, load and mounting conditions. Furthermore, if the cable length exceeds 5 m, then it will decrease by up to 10% for each 5 m. (At 15 m: Reduced by up to 20%)
When [M: Sliding bearing] is selected, the maximum speed of lead [A] is 400 mm/s (at no-load, horizontal mounting).
The speed is also restricted with a horizontal/moment load. For details, refer to the "Model Selection" on page 508.
*5 The allowable speed for the pushing operation
*6 A reference value for correcting errors in reciprocal operation
*7 Impact resistance: No malfunction occurred when it was tested with a drop tester in both an axial direction and a perpendicular direction to the lead screw. (The test was performed with the actuator in the initial state.)
Vibration resistance: No malfunction occurred in a test ranging between 45 to 2000 Hz. The test was performed in both an axial direction and a perpendicular direction to the lead screw. (The test was performed with the actuator in the initial state.)
*8 Indicates the max. power during operation (including the controller). This value can be used for the selection of the power supply.
*9 With lock only
*10 For an actuator with lock, add the power for the lock.

Weight

Weight: Top Side Parallel Motor Type

Series	LEYG16M□E					LEYG25M□E							LEYG32M□E						
Stroke [mm]	30	50	100	150	200	30	50	100	150	200	250	300	30	50	100	150	200	250	300
Product weight [kg]	1	1.14	1.37	1.66	1.83	1.7	1.89	2.21	2.63	2.97	3.31	3.57	2.95	3.21	3.76	4.32	4.99	5.48	5.92

Series	LEYG16L□E					LEYG25L□E							LEYG32L□E						
Stroke [mm]	30	50	100	150	200	30	50	100	150	200	250	300	30	50	100	150	200	250	300
Product weight [kg]	1.01	1.14	1.31	1.6	1.75	1.71	1.92	2.16	2.59	2.85	3.17	3.41	2.95	3.22	3.61	4.16	4.7	5.21	5.6

Series	LEYG40M□E							LEYG40L□E						
Stroke [mm]	30	50	100	150	200	250	300	30	50	100	150	200	250	300
Product weight [kg]	3.26	3.52	4.07	4.63	5.3	5.79	6.23	3.26	3.53	3.92	4.47	5.01	5.52	5.91

Weight: In-line Motor Type

Series	LEYG16M□E					LEYG25M□E							LEYG32M□E						
Stroke [mm]	30	50	100	150	200	30	50	100	150	200	250	300	30	50	100	150	200	250	300
Product weight [kg]	0.97	1.11	1.34	1.68	1.8	1.09	1.88	2.20	2.62	2.96	3.30	3.56	2.96	3.20	3.75	4.81	4.98	5.47	5.91

Series	LEYG16L□E					LEYG25L□E							LEYG32L□E						
Stroke [mm]	30	50	100	150	200	30	50	100	150	200	250	300	30	50	100	150	200	250	300
Product weight [kg]	0.98	1.11	1.28	1.57	1.72	1.70	1.91	2.15	2.58	2.84	3.16	3.40	2.54	3.21	3.60	4.15	4.69	5.20	5.59

Series	LEYG40M□E							LEYG40L□E						
Stroke [mm]	30	50	100	150	200	250	300	30	50	100	150	200	250	300
Product weight [kg]	3.25	3.51	4.06	4.62	5.25	5.78	6.22	3.25	3.52	3.91	4.46	5.00	5.51	5.90

Additional Weight

(kg)

Size	16	25	32	40
Lock/Motor cover	0.16	0.29	0.57	0.57

Construction

Top side parallel motor type: LEYG 25/32/40 E

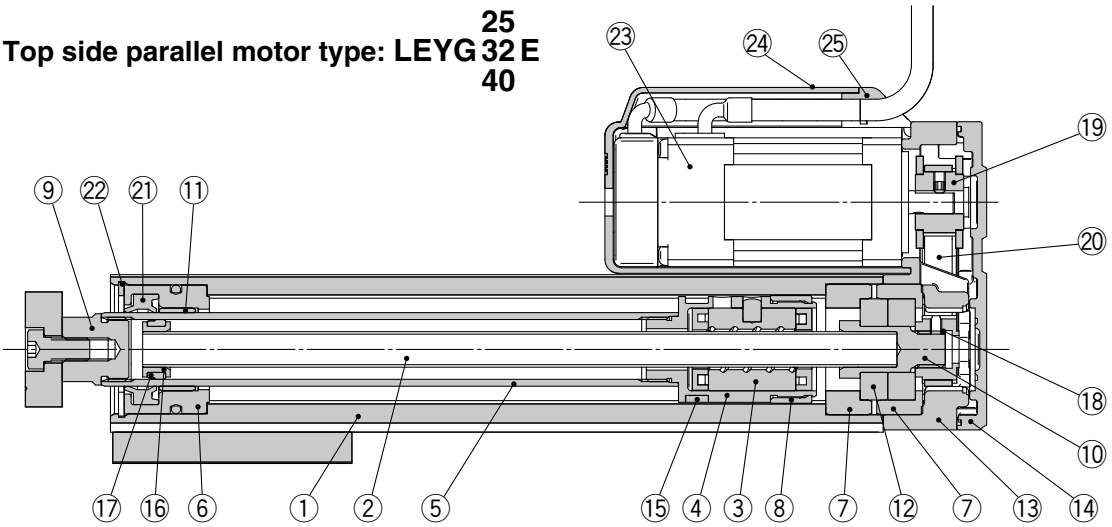

Top side parallel motor type, With lock/motor cover

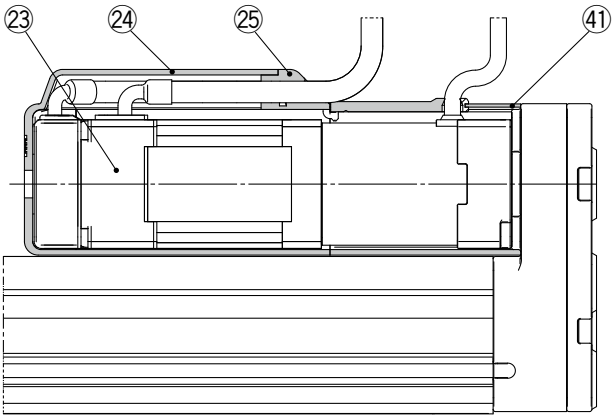

Top side parallel motor type: LEYG16E

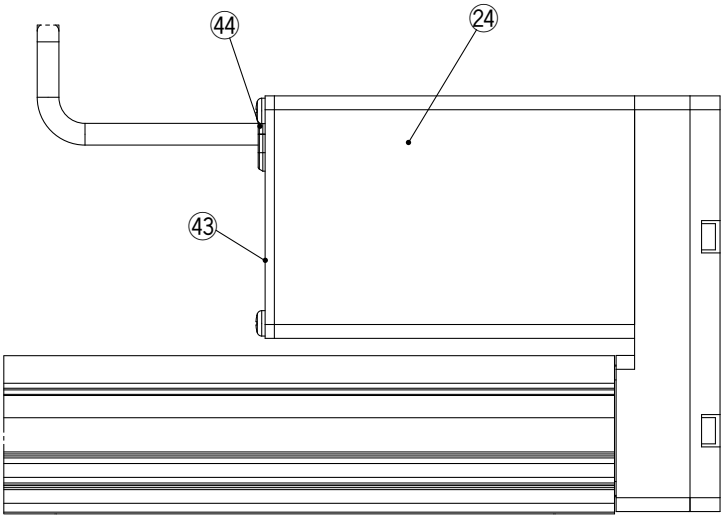

In-line motor type

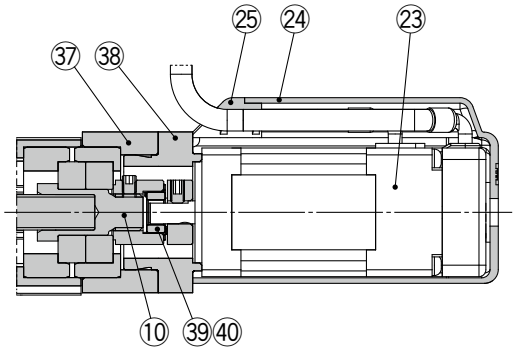

In-line motor type, With lock/motor cover

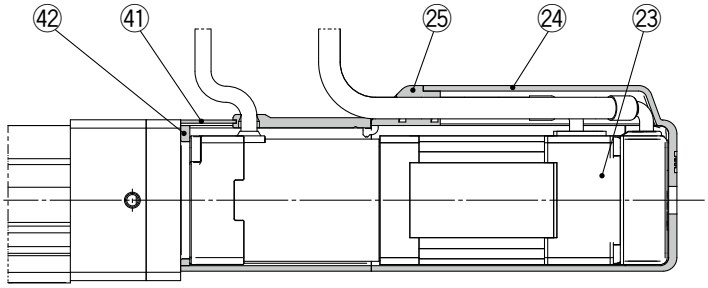

In-line motor type: LEYG16E

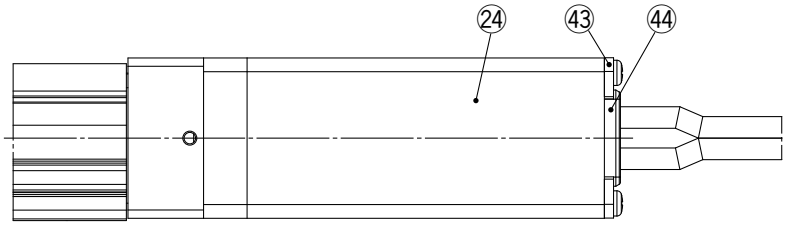

Construction

LEYG□M

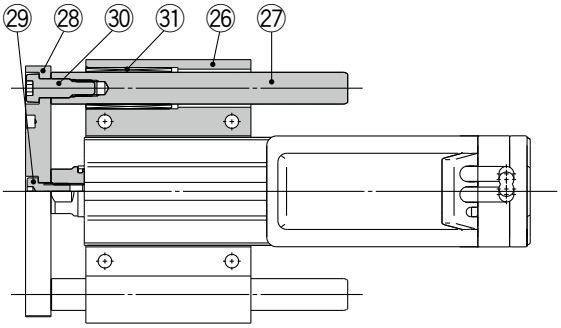

LEYG16/25/32/40M: 50st or less

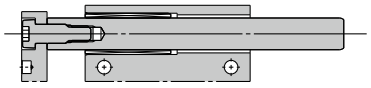

LEYG16/25/32/40M: Over 50st

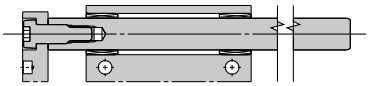

When grease retaining function selected

LEYG25/32/40M□□A/B/C-□□F: 50st or less

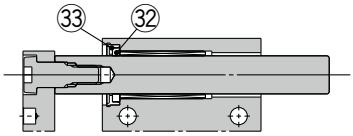

LEYG25/32/40M□□A/B/C-□□F: Over 50st

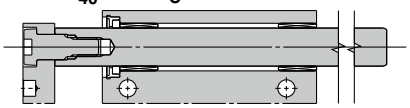

∗ Felt material is inserted to retain grease at the sliding part of the sliding bearing. This lengthens the life of the sliding part, but does not guarantee it permanently.

LEYG□L

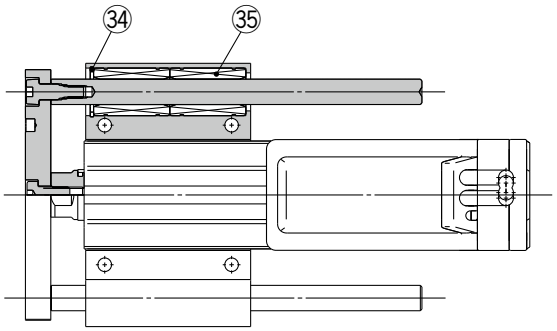

LEYG16L: 30st or less
LEYG25/32/40L: 100st or less

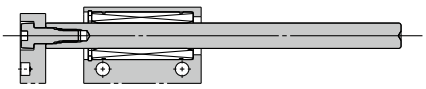

LEYG16L: Over 30st, 100st or less

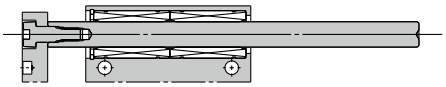

LEYG16/25/32/40L: Over 100st

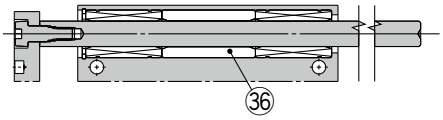

Component Parts

No.	Description	Material	Note
1	**Body**	Aluminum alloy	Anodized
2	**Ball screw shaft**	Alloy steel	
3	**Ball screw nut**	Synthetic resin/Alloy steel	
4	**Piston**	Aluminum alloy	
5	**Piston rod**	Stainless steel	Hard chrome plating
6	**Rod cover**	Aluminum alloy	
7	**Bearing holder**	Aluminum alloy	
8	**Rotation stopper**	Synthetic resin	
9	**Socket**	Free cutting carbon steel	Nickel plating
10	**Connected shaft**	Free cutting carbon steel	Nickel plating
11	**Bushing**	Bearing alloy	
12	**Bearing**	—	
13	**Return box**	Aluminum die-cast	Coating
14	**Return plate**	Aluminum die-cast	Coating
15	**Magnet**	—	
16	**Wear ring holder**	Stainless steel	Stroke 101 mm or more
17	**Wear ring**	Synthetic resin	Stroke 101 mm or more
18	**Screw shaft pulley**	Aluminum alloy	
19	**Motor pulley**	Aluminum alloy	
20	**Belt**	—	
21	**Seal**	NBR	
22	**Retaining ring**	Steel for spring	Phosphate coating
23	**Motor**	—	
24	**Motor cover**	Aluminum alloy	Anodized/LEY16 only
		Synthetic resin	
25	**Grommet**	Synthetic resin	Only “With motor cover”
26	**Guide attachment**	Aluminum alloy	Anodized
27	**Guide rod**	Carbon steel	

No.	Description	Material	Note
28	**Plate**	Aluminum alloy	Anodized
29	**Plate mounting cap screw**	Carbon steel	Nickel plating
30	**Guide cap screw**	Carbon steel	Nickel plating
31	**Sliding bearing**	Bearing alloy	
32	**Lube-retainer**	Felt	
33	**Holder**	Synthetic resin	
34	**Retaining ring**	Steel for spring	Phosphate coating
35	**Ball bushing**	—	
36	**Spacer**	Aluminum alloy	Chromating
37	**Motor block**	Aluminum alloy	Anodized
38	**Motor adapter**	Aluminum alloy	Anodized/LEY16, 25 only
39	**Hub**	Aluminum alloy	
40	**Spider**	NBR	
41	**Motor cover with lock**	Aluminum alloy	Only “With lock/motor cover”/LEY25, 32, 40
42	**Cover support**	Aluminum alloy	Only “With lock/motor cover”/LEY25, 32, 40
43	**End cover**	Aluminum alloy	Anodized/LEY16 only
44	**Rubber bushing**	NBR	LEY16 only

Replacement Parts/Belt

No.	Size	Order no.
20	**16**	LE-D-2-7
	25	LE-D-2-2
	32, 40	LE-D-2-3

Replacement Parts/Grease Pack

Applied portion	Order no.
Piston rod	GR-S-010 (10 g)
Guide rod	GR-S-020 (20 g)

Dimensions: Top Side Parallel Motor

∗1 This is the range within which the rod can move when it returns to origin. Make sure that workpieces mounted on the rod do not interfere with other workpieces or the facilities around the rod.
∗2 Position after returning to origin
∗3 [ ] for when the direction of return to origin has changed
∗4 Through holes cannot be used for size 32/40 with strokes of 50 mm or less.

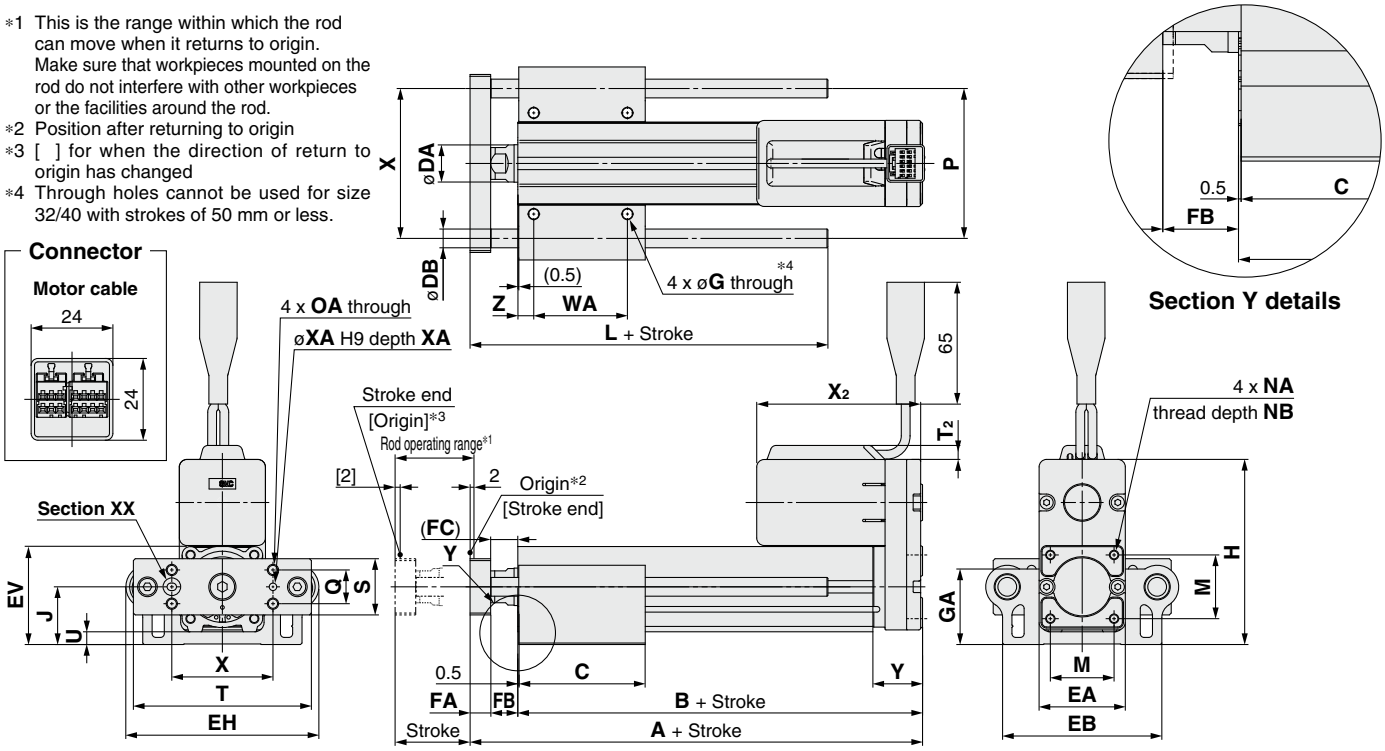

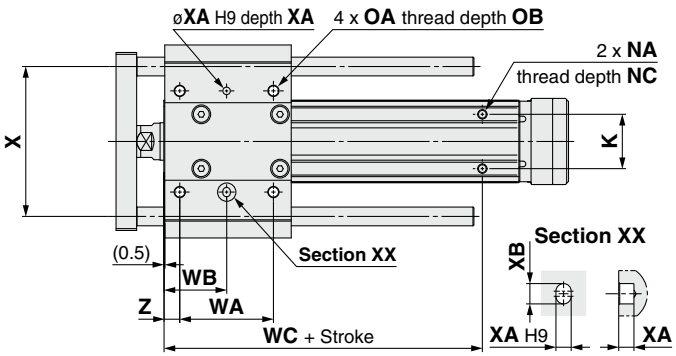

LEYG□L (Ball bushing bearing) [mm]

Size	Stroke range	L	DB
16	30 to 100	75	8
	105 to 200	105	
25	30 to 110	91	10
	115 to 190	115	
	195 to 300	133	
32 40	30 to 110	97.5	13
	115 to 190	116.5	
	195 to 300	134	

LEYG□M (Sliding bearing) [mm]

Size	Stroke range	L	DB
16	30 to 60	51.5	10
	65 to 100	74.5	
	105 to 200	105	
25	30 to 55	67.5	12
	60 to 185	100.5	
	190 to 300	138	
32 40	30 to 50	74	16
	55 to 180	107	
	185 to 300	144	

LEYG□M, LEYG□L Common

[mm]

Size	Stroke range	A	B	C	DA	EA	EB	EH	EV	FA	FB	FC	G	GA	H	J	K	M	NA	NB	NC
16	30 to 35	109	90.5	37	16	35	69	83	41.1	8	10.5	8.5	4.3	31.8	97.3	24.8	23	25.5	M4 x 0.7	7	5.5
	40 to 100			52																	
	105 to 200	129	110.5	82																	
25	30 to 35	141.5	116	50	20	46	85	103	52.3	11	14.5	12.5	5.4	40.3	98.8	30.8	29	34	M5 x 0.8	8	6.5
	40 to 100			67.5																	
	105 to 120	166.5	141																		
	125 to 200			84.5																	
	205 to 300			102																	
32 40	30 to 35	160.5	130	55	25	60	101	123	63.8	12	18.5	16.5	5.4	50.3	125.3	38.3	30	40	M6 x 1.0	10	8.5
	40 to 100			68																	
	105 to 120	190.5	160																		
	125 to 200			85																	
	205 to 300			102																	

Size	Stroke range	OA	OB	P	Q	S	T	T2	U	WA	WB	WC	X2 With motor cover	X2 With lock/motor cover	X	XA	XB	Y	Z
16	30 to 35	M5 x 0.8	10	65	15	25	79	—	6.8	25	19	55	100.5	145.5	44	3	4	22.5	6.5
	40 to 100									40	26.5								
	105 to 200									70	41.5	75							
25	30 to 35	M6 x 1.0	12	80	18	30	95	7.5	6.8	35	26	70	88.5	129	54	4	5	26.5	8.5
	40 to 100									50	33.5								
	105 to 120											95							
	125 to 200									70	43.5								
	205 to 300									85	51								
32	30 to 35	M6 x 1.0	12	95	28	40	117	8.5	7.3	40	28.5	75	98.5	141.5	64	5	6	34	8.5
	40 to 100									50	33.5								
	105 to 120											105							
	125 to 200									70	43.5								
	205 to 300									85	51								
40	30 to 35	M6 x 1.0	12	95	28	40	117	8.5	7.3	40	28.5	75	120.5	163.5	64	5	6	34	8.5
	40 to 100									50	33.5								
	105 to 120											105							
	125 to 200									70	43.5								
	205 to 300									85	51								

Dimensions: Top Side Parallel Motor

With lock/motor cover: LEYG32E$^{25}_{40}$□$^{A}_{B}$-□W
C

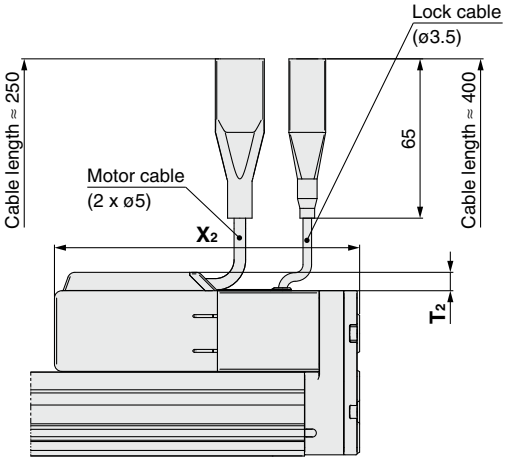

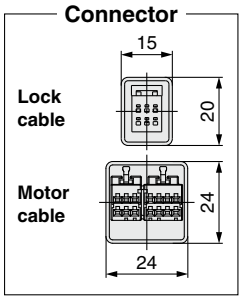

With motor cover: LEYG16E$^{A}_{B}$-□C
C

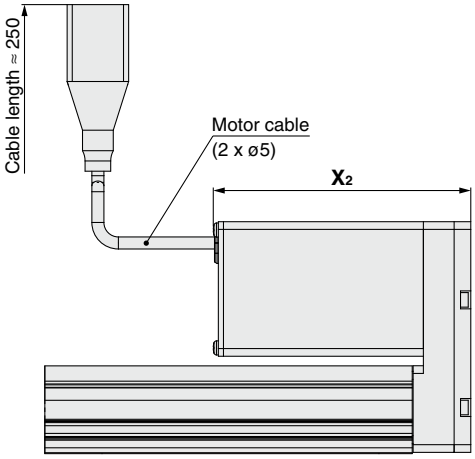

With lock/motor cover: LEYG16E$^{A}_{B}$-□W
C

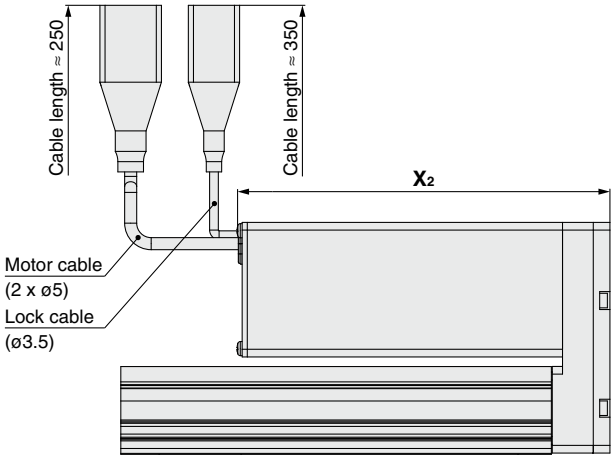

Dimensions: In-line Motor

∗1 This is the range within which the rod can move when it returns to origin.
Make sure that workpieces mounted on the rod do not interfere with other workpieces or the facilities around the rod.
∗2 Position after returning to origin
∗3 [ ] for when the direction of return to origin has changed

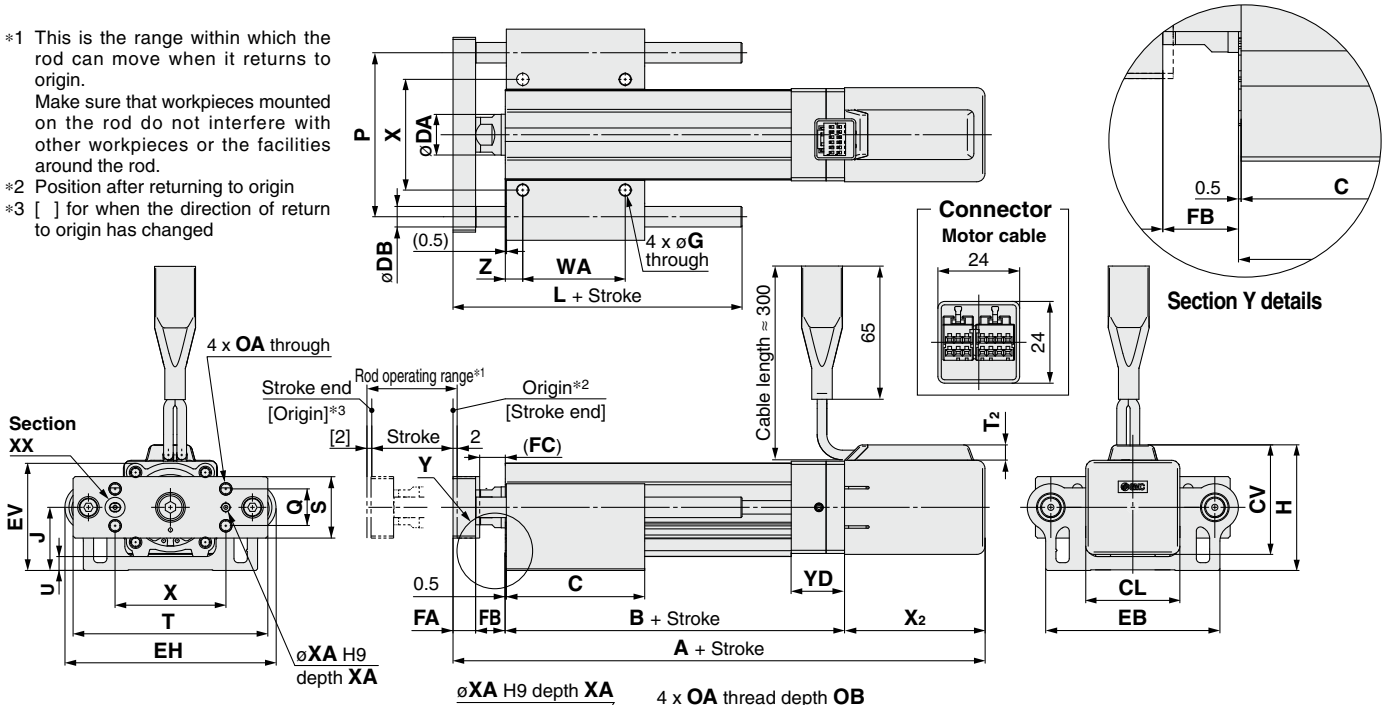

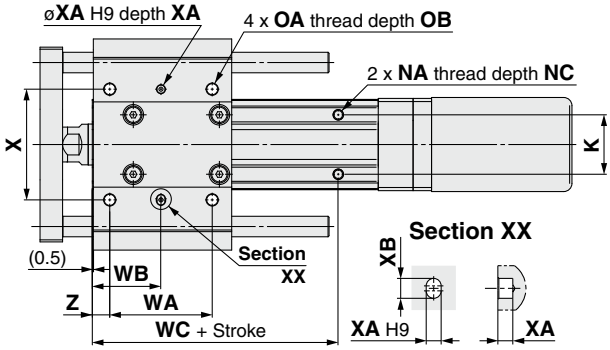

LEYG□L (Ball bushing bearing) [mm]

Size	Stroke range	L	DB
16	30 to 100	75	8
	105 to 200	105	
25	30 to 110	91	10
	115 to 190	115	
	195 to 300	133	
32 40	30 to 110	97.5	13
	115 to 190	116.5	
	195 to 300	134	

LEYG□M (Sliding bearing) [mm]

Size	Stroke range	L	DB
16	30 to 60	51.5	10
	65 to 100	74.5	
	105 to 200	105	
25	30 to 55	67.5	12
	60 to 185	100.5	
	190 to 300	138	
32 40	30 to 50	74	16
	55 to 180	107	
	185 to 300	144	

LEYG□M, LEYG□L Common

[mm]

Size	Stroke range	A Without lock	A With lock	B	C	CL	CV	DA	EB	EH	EV	FA	FB	FC	G	GA	H	J	K	NA	NC
16	30 to 35	194.5	239.5	94	37	—	—	16	69	83	41.1	8	10.5	8.5	4.3	31.8	∗1 42.3	24.8	23	M4 x 0.7	5.5
	40 to 100				52																
	105 to 200	214.5	259.5	114	82																
25	30 to 35	209.5	250	115.5	50	46	54.5	20	85	103	52.3	11	14.5	12.5	5.4	40.3	61.3	30.8	29	M5 x 0.8	6.5
	40 to 100				67.5																
	105 to 120	234.5	275	140.5																	
	125 to 200				84.5																
	205 to 300				102																
32	30 to 35	232	275	128	55	60	68.5	25	101	123	63.8	12	18.5	16.5	5.4	50.3	75.8	38.3	30	M6 x 1.0	8.5
	40 to 100				68																
	105 to 120	262	305	158																	
	125 to 200				85																
	205 to 300				102																
40	30 to 35	254	297	128	55	60	68.5	25	101	123	63.8	12	18.5	16.5	5.4	50.3	75.8	38.3	30	M6 x 1.0	8.5
	40 to 100				68																
	105 to 120	284	327	158																	
	125 to 200				85																
	205 to 300				102																

Size	Stroke range	OA	OB	P	Q	S	T	T2	U	WA	WB	WC	X	X2 With motor cover	X2 With lock/motor cover	XA	XB	YD	Z
16	30 to 35	M5 x 0.8	10	65	15	25	79	—	6.8	25	19	55	44	82	127	3	4	24	6.5
	40 to 100									40	26.5								
	105 to 200									70	41.5	75							
25	30 to 35	M6 x 1.0	12	80	18	30	95	7.5	6.8	35	26	70	54	68.5	109	4	5	26	8.5
	40 to 100									50	33.5								
	105 to 120											95							
	125 to 200									70	43.5								
	205 to 300									85	51								
32	30 to 35	M6 x 1.0	12	95	28	40	117	8.5	7.3	40	28.5	75	64	73.5	116.5	5	6	32	8.5
	40 to 100									50	33.5								
	105 to 120											105							
	125 to 200									70	43.5								
	205 to 300									85	51								
40	30 to 35	M6 x 1.0	12	95	28	40	117	8.5	7.3	40	28.5	75	64	95.5	138.5	5	6	32	8.5
	40 to 100									50	33.5								
	105 to 120											105							
	125 to 200									70	43.5								
	205 to 300									85	51								

∗1 Refer to page 542.

Dimensions: In-line Motor

With lock/motor cover: LEYG32DE□B-□W

25 A
40 C

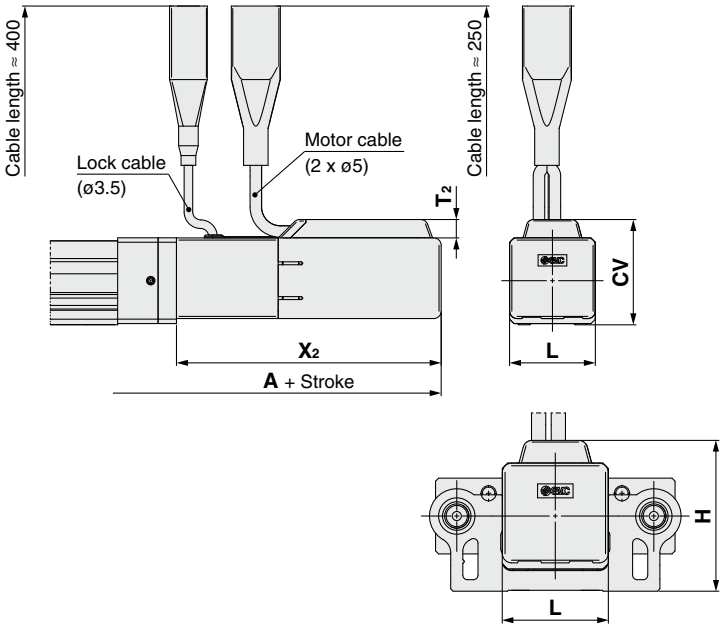

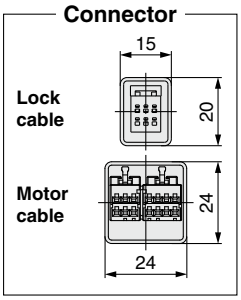

[mm]

Size	Stroke range	T_2	X_2	L	H	CV
16	Up to 100	7.5	108	35	42.3 *1	—
	105 to 200					
25	Up to 100	7.5	109	46	61.3	54.4
	105 to 300					
32	Up to 100	7.5	116.5	60	75.8	68.5
	105 to 300					
40	Up to 100	7.5	138.5	60	75.8	68.5
	105 to 300					

*1 Refer to the table below.

With motor cover: LEYG16D□EB-□C

A
C

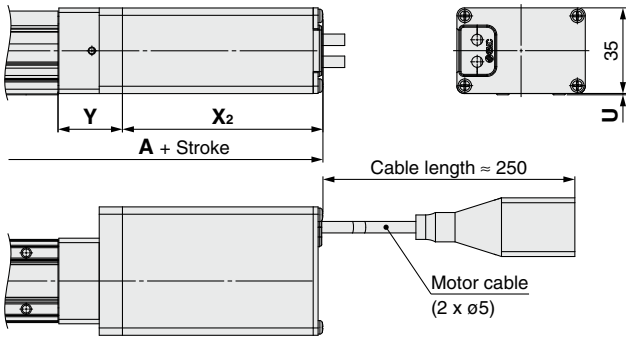

H Dimensions (Size 16)

Motor cover direction	H
D_1	42.3
D_2	42.3
D_3	55.1
D_4	47

With lock/motor cover: LEYG16D□EB-□W

A
C

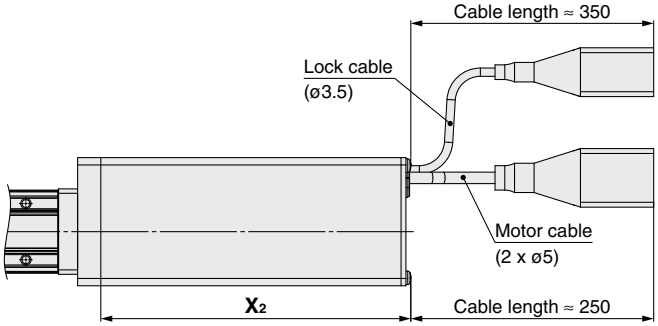

Motor Cover Direction

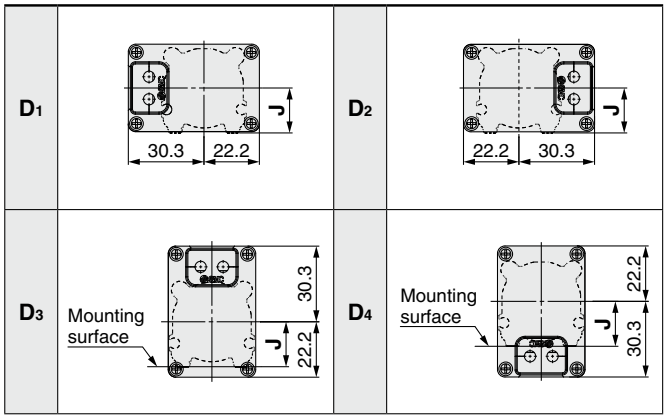

Support Block

●Guide for support block application

When the stroke exceeds 100 mm and the mounting orientation is horizontal, the body will be bent. Mounting the support block is recommended. (Please order it separately from the models shown below.)

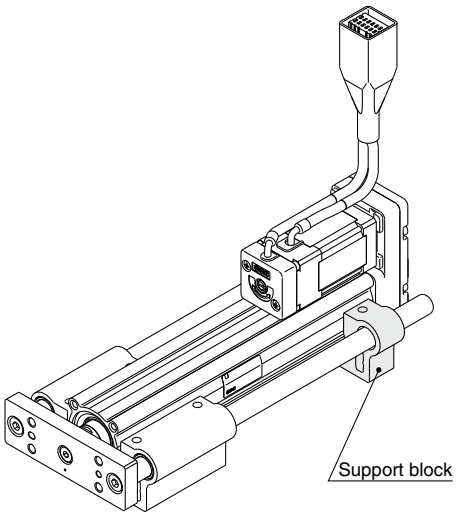

Support Block Model

LEYG-S016

●**Size**

016	For size 16
025	For size 25
032	For sizes 32, 40

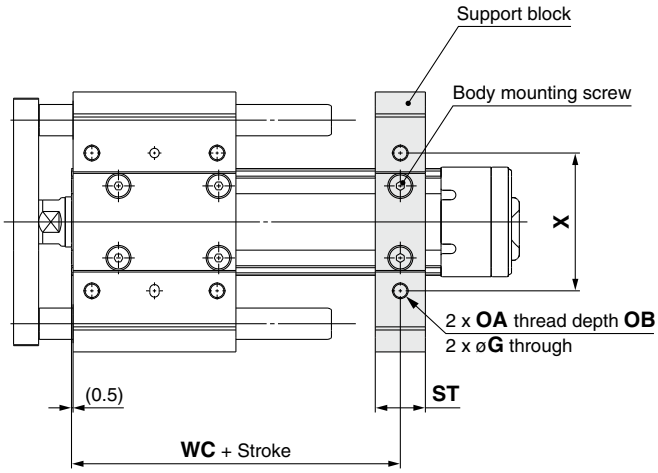

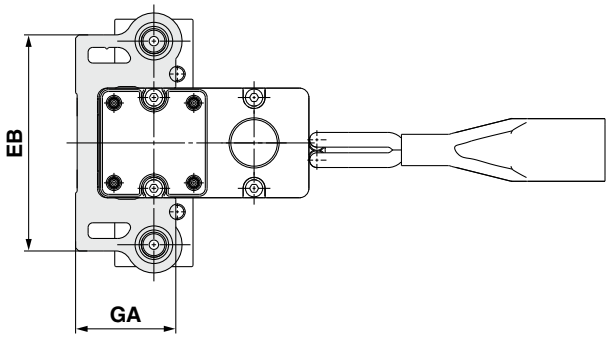

⚠Caution

Do not install the body using only a support block.
The support block should be used only for support.

[mm]

Size	Model	Stroke range	EB	G	GA	OA	OB	ST	WC	X
16	**LEYG-S016**	Up to 100	69	4.3	31.8	M5 x 0.8	10	16	55	44
		105 to 200							75	
25	**LEYG-S025**	Up to 100	85	5.4	40.3	M6 x 1.0	12	20	70	54
		105 to 300							95	
32 **40**	**LEYG-S032**	Up to 100	101	(5.4)	(50.3)	M6 x 1.0	12	22	75	64
		105 to 300							105	

∗ Two body mounting screws are included with the support block.
∗ The through holes of the LEYG-S032 cannot be used for the top side parallel motor type. Use taps on the bottom.

Incremental (Step Motor 24 VDC) Incremental (Servo Motor 24 VDC)

Guide Rod Type

LEYG Series LEYG16, 25, 32, 40

∗ For details, refer to page 1343 and onward.

RoHS

How to Order

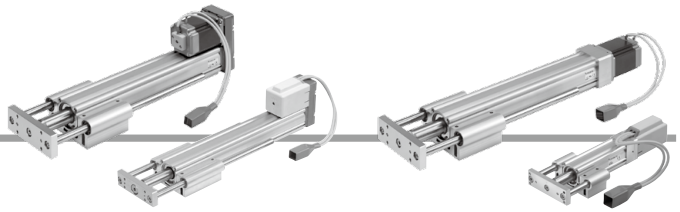

Motor mounting position: Parallel

Motor mounting position: In-line

LEYG 16 M □ □ B – 50 □ □ – S1

❶ ❷ ❸ ❹ ❺ ❻ ❼ ❽ ❾

JXC□ Series **CD17T**

LEC□ Series **AN 1 □**

❿ ⓫ ⓬

For details on controllers, refer to page 547.

❶ Size

16
25
32
40

❷ Bearing type∗1

M	Sliding bearing
L	Ball bushing bearing

❸ Motor mounting position

Nil	Top side parallel
D	In-line

❹ Motor type

Symbol	Type	Applicable size			Compatible controllers/ drivers
		LEYG16	LEYG25	LEYG32/40	
Nil	Step motor (Servo/24 VDC)	●	●	●	JXC51 JXCD1 JXCPF JXC61 JXCL1 JXCLF JXCE1 JXCM1 JXC91 JXCEF LECP1 JXCP1 JXC9F LECPA
A	Servo motor (24 VDC)	●	●	—	LECA6

❺ Lead [mm]

Symbol	LEYG16	LEYG25	LEYG32/40
A	10	12	16
B	5	6	8
C	2.5	3	4

❻ Stroke∗2 ∗3 [mm]

30	30
to	to
300	300

∗ For details, refer to the applicable stroke table below.

❼ Motor option∗4

Nil	Without option
C	With motor cover
B	With lock
W	With lock/motor cover

❽ Guide option∗5

Nil	Without option
F	With grease retaining function

❾ Actuator cable type/length∗7

Standard cable [m]

Nil	None
S1	1.5∗9
S3	3∗9
S5	5∗9

Robotic cable [m]

R1	1.5	RA	10∗6
R3	3	RB	15∗6
R5	5	RC	20∗6
R8	8∗6		

Applicable Stroke Table∗2

●: Standard

Model \ Stroke [mm]	30	50	100	150	200	250	300	Manufacturable stroke range [mm]
LEYG16	●	●	●	●	●	—	—	10 to 200
LEYG25	●	●	●	●	●	●	●	15 to 300
LEYG32/40	●	●	●	●	●	●	●	20 to 300

For auto switches, refer to pages 503 to 505.

Use of auto switches for the guide rod type LEYG series
- Auto switches must be inserted from the front side with the rod (plate) sticking out.
- Auto switches cannot be fixed with the parts hidden behind the guide attachment (the side of the rod that sticks out).
- Please contact SMC when using auto switches on the side of the rod that sticks out, as it is produced as a special order.

JXC□ Series (For details, refer to page 547.)

⑩ Controller

Nil	Without controller
C□1□□	With controller

C D 1 7 T

Interface (Communication protocol/Input/Output)

Symbol	Type	Number of axes, Special specification: Standard	With STO sub-function
5	Parallel input (NPN)	●	
6	Parallel input (PNP)	●	
E	EtherCAT	●	●
9	EtherNet/IP™	●	●
P	PROFINET	●	●
D	DeviceNet®	●	
L	IO-Link	●	●
M	CC-Link	●	

Mounting

7	Screw mounting
8*13	DIN rail

Number of axes, Special specification

Symbol	Number of axes	Specification
1	Single axis	Standard
F	Single axis	With STO sub-function

Communication plug connector, I/O cable*14

Symbol	Type	Applicable interface
Nil	Without accessory	—
S	Straight type communication plug connector	DeviceNet® CC-Link Ver. 1.10
T	T-branch type communication plug connector	
1	I/O cable (1.5 m)	Parallel input (NPN) Parallel input (PNP)
3	I/O cable (3 m)	
5	I/O cable (5 m)	

LEC□ Series (For details, refer to page 547.)

AN 1 □
⑩ ⑪ ⑫

⑩ Controller/Driver type*8

Nil	Without controller/driver	
6N	LECA6 (Step data input type)	NPN
6P		PNP
1N	LECP1*9 (Programless type)	NPN
1P		PNP
AN	LECPA*9 *10 (Pulse input type)	NPN
AP		PNP

⑪ I/O cable length*11

Nil	Without cable (Without communication plug connector)
1	1.5 m
3	3 m*12
5	5 m*12

⑫ Controller/Driver mounting

Nil	Screw mounting
D	DIN rail*13

*1 When [M: Sliding bearing] is selected, the max. speed of lead [A] is 400 mm/s (at no-load, horizontal mounting). The speed is also restricted with a horizontal/moment load. Refer to the "Model Selection" on page 514.
*2 Please contact SMC for non-standard strokes as they are produced as special orders.
*3 There is a limit for mounting the size 32/40 top side parallel motor types and strokes of 50 mm or less. Refer to the dimensions.
*4 When "With lock" or "With lock/motor cover" is selected for the top side parallel motor type, the motor body will stick out from the end of the body for size 16/40 with strokes of 30 mm or less. Check for interference with workpieces before selecting a model.
*5 Only available for size 25, 32, and 40 sliding bearings (Refer to the "Construction" on page 552.)
*6 Produced upon receipt of order (Robotic cable only)
*7 The standard cable should only be used on fixed parts.
For use on moving parts, select the robotic cable.
Refer to the **Web Catalog** if only the actuator cable is required.
*8 For details on controllers/drivers and compatible motors, refer to the compatible controllers/drivers on the next page.
*9 Only available for the motor type "Step motor"
*10 When pulse signals are open collector, order the current limiting resistor (LEC-PA-R-□) on page 1062 separately.
*11 When "Without controller/driver" is selected for controller/driver types, I/O cable cannot be selected. If an I/O cable is required, refer to the cable for the LECA6 (**Web Catalog**), LECP1 (**Web Catalog**), or LECPA (**Web Catalog**).
*12 When "Pulse input type" is selected for controller/driver types, pulse input usable only with differential. Only 1.5 m cables usable with open collector
*13 The DIN rail is not included. It must be ordered separately.
*14 Select "Nil" for anything other than DeviceNet®, CC-Link, or parallel input.
Select "Nil," "S," or "T" for DeviceNet® or CC-Link.
Select "Nil," "1," "3," or "5" for parallel input.

⚠Caution

[CE/UKCA-compliant products]

① EMC compliance was tested by combining the electric actuator LEY series and the controller LEC/JXC series.
The EMC depends on the configuration of the customer's control panel and the relationship with other electrical equipment and wiring. Therefore, compliance with the EMC directive cannot be certified for SMC components incorporated into the customer's equipment under actual operating conditions. As a result, it is necessary for the customer to verify compliance with the EMC directive for the machinery and equipment as a whole.
② For the incremental (servo motor 24 VDC) specification, EMC compliance was tested by installing a noise filter set (LEC-NFA). Refer to page 1037 for the noise filter set. Refer to the LECA series Operation Manual for installation.

[UL-compliant products (For the LEC series)]
When compliance with UL is required, the electric actuator and controller/driver should be used with a UL1310 Class 2 power supply.

The actuator and controller/driver are sold as a package.

Confirm that the combination of the controller/driver and actuator is correct.

<Check the following before use.>
① Check the actuator label for the model number. This number should match that of the controller/driver.
② Check that the Parallel I/O configuration matches (NPN or PNP).

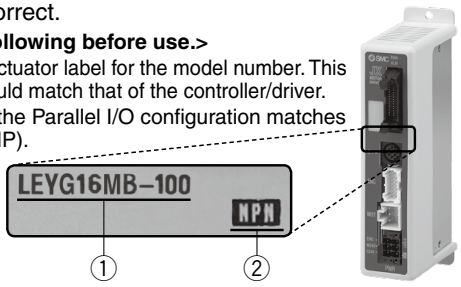

* Refer to the Operation Manual for using the products. Please download it via our website: https://www.smcworld.com

Compatible Controllers/Drivers

Type	Step data input type	Step data input type	Programless type	Pulse input type
Series	**JXC51 JXC61**	**LECA6**	**LECP1**	**LECPA**
Features	Parallel I/O	Parallel I/O	Capable of setting up operation (step data) without using a PC or teaching box	Operation by pulse signals
Compatible motor	Step motor (Servo/24 VDC)	Servo motor (24 VDC)	Step motor (Servo/24 VDC)	
Max. number of step data	64 points		14 points	—
Power supply voltage	24 VDC			
Reference page	1017	1031	1042	1057

Type	EtherCAT direct input type	EtherCAT direct input type with STO sub-function	EtherNet/IP™ direct input type	EtherNet/IP™ direct input type with STO sub-function	PROFINET direct input type	PROFINET direct input type with STO sub-function	DeviceNet® direct input type	IO-Link direct input type	IO-Link direct input type with STO sub-function	CC-Link direct input type
Series	**JXCE1**	**JXCEF**	**JXC91**	**JXC9F**	**JXCP1**	**JXCPF**	**JXCD1**	**JXCL1**	**JXCLF**	**JXCM1**
Features	EtherCAT direct input	EtherCAT direct input with STO sub-function	EtherNet/IP™ direct input	EtherNet/IP™ direct input with STO sub-function	PROFINET direct input	PROFINET direct input with STO sub-function	DeviceNet® direct input	IO-Link direct input	IO-Link direct input with STO sub-function	CC-Link direct input
Compatible motor	Step motor (Servo/24 VDC)									
Max. number of step data	64 points									
Power supply voltage	24 VDC									
Reference page	1063									

Specifications

Step Motor (Servo/24 VDC)

Model				LEYG16 M/L			LEYG25 M/L			LEYG32 M/L			LEYG40 M/L		
Actuator specifications	Work load [kg]*1	Horizontal (JXC□1, JXC□F, LECP1)	Acceleration/Deceleration at 3000 [mm/s²]	6	17	30	20	40	60	30	45	60	50	60	80
			Acceleration/Deceleration at 2000 [mm/s²]	10	23	35	30	55	70	40	60	80	60	70	90
		Horizontal (LECPA, JXC□2/3)	Acceleration/Deceleration at 3000 [mm/s²]	4	11	20	12	30	30	20	40	40	30	60	60
			Acceleration/Deceleration at 2000 [mm/s²]	6	17	30	18	50	50	30	60	60	—	—	—
		Vertical	Acceleration/Deceleration at 3000 [mm/s²]	1.5	3.5	7.5	7	15	29	9	20	41	11	25	51
	Pushing force [N]*2 *3 *4			14 to 38	27 to 74	51 to 141	63 to 122	126 to 238	232 to 452	80 to 189	156 to 370	296 to 707	132 to 283	266 to 553	562 to 1058
	Speed [mm/s]*4	JXC□1/LECP1		15 to 500	8 to 250	4 to 125	18 to 500	9 to 250	5 to 125	24 to 500	12 to 300	6 to 150	24 to 500	12 to 350	6 to 175
		LECPA/JXC□2/3									12 to 250	6 to 125	24 to 300	12 to 150	6 to 75
	Max. acceleration/deceleration [mm/s²]			3000											
	Pushing speed [mm/s]*5			50 or less			35 or less			30 or less			30 or less		
	Positioning repeatability [mm]			±0.02											
	Lost motion [mm]*6			0.1 or less											
	Screw lead [mm]			10	5	2.5	12	6	3	16	8	4	16	8	4
	Impact/Vibration resistance [m/s²]*7			50/20											
	Actuation type			Ball screw + Belt (LEYG□□), Ball screw (LEYG□□D)											
	Guide type			Sliding bearing (LEYG□M), Ball bushing bearing (LEYG□L)											
	Operating temp. range [°C]			5 to 40											
	Operating humidity range [%RH]			90 or less (No condensation)											
	Enclosure			IP40											
Electric specifications	Motor size			□28			□42			□56.4			□56.4		
	Motor type			Step motor (Servo/24 VDC)											
	Encoder			Incremental											
	Power supply voltage [V]			24 VDC ±10%											
	Power [W]*8 *10			Max. power 43			Max. power 48			Max. power 104			Max. power 106		
Lock unit specifications	Type*9			Non-magnetizing lock											
	Holding force [N]			20	39	78	78	157	294	108	216	421	127	265	519
	Power [W]*10			2.9			5			5			5		
	Rated voltage [V]			24 VDC ±10%											

*1 Horizontal: An external guide is necessary to support the load (Friction coefficient of guide: 0.1 or less). The actual work load and transfer speed change according to the condition of the external guide. Also, speed changes according to the work load. Check the "Model Selection" on pages 515 and 516.
Vertical: Speed changes according to the work load. Check the "Model Selection" on pages 515 and 516.
Set the acceleration/deceleration values to be 3000 [mm/s²] or less.

*2 Pushing force accuracy is ±20% (F.S.).

*3 The pushing force values for LEYG16□□ are 35% to 85%, for LEYG25□□ are 35% to 65%, for LEYG32□□ are 35% to 85%, and for LEYG40□□ are 35% to 65%. The pushing force values change according to the duty ratio and pushing speed. Check the "Model Selection" on page 518.

*4 The speed and force may change depending on the cable length, load, and mounting conditions. Furthermore, if the cable length exceeds 5 m, then it will decrease by up to 10% for each 5 m. (At 15 m: Reduced by up to 20%)
When [M: Sliding bearing] is selected, the max. speed of lead [A] is 400 mm/s (at no-load, horizontal mounting).
The speed is also restricted with a horizontal/moment load. Refer to the "Model Selection" on page 514.

*5 The allowable speed for the pushing operation

*6 A reference value for correcting errors in reciprocal operation

*7 Impact resistance: No malfunction occurred when the actuator was tested with a drop tester in both an axial direction and a perpendicular direction to the lead screw. (The test was performed with the actuator in the initial state.)
Vibration resistance: No malfunction occurred in a test ranging between 45 to 2000 Hz. The test was performed in both an axial direction and a perpendicular direction to the lead screw. (The test was performed with the actuator in the initial state.)

*8 Indicates the max. power during operation (including the controller). This value can be used for the selection of the power supply.

*9 With lock only

*10 For an actuator with lock, add the power for the lock.

Specifications

Servo Motor (24 VDC)

Model				LEYG16$^{M}_{L}$□A			LEYG25$^{M}_{L}$□A		
Actuator specifications	Work load [kg]*1	Horizontal	Acceleration/Deceleration at 3000 [mm/s²]	3	6	12	7	15	30
		Vertical	Acceleration/Deceleration at 3000 [mm/s²]	1.5	3.5	7.5	2	5	11
	Pushing force [N]*2 *3			16 to 30	30 to 58	57 to 111	18 to 35	37 to 72	66 to 130
	Speed [mm/s]			1 to 500	1 to 250	1 to 125	2 to 500	1 to 250	1 to 125
	Max. acceleration/deceleration [mm/s²]			3000					
	Pushing speed [mm/s]*4			50 or less			35 or less		
	Positioning repeatability [mm]			±0.02					
	Lost motion [mm]*5			0.1 or less					
	Screw lead [mm]			10	5	2.5	12	6	3
	Impact/Vibration resistance [m/s²]*6			50/20					
	Actuation type			Ball screw + Belt (LEYG□□), Ball screw (LEYG□□D)					
	Guide type			Sliding bearing (LEYG□M), Ball bushing bearing (LEYG□L)					
	Operating temp. range [°C]			5 to 40					
	Operating humidity range [%RH]			90 or less (No condensation)					
	Enclosure			IP40					
Electric specifications	Motor size			□28			□42		
	Motor output [W]			30			36		
	Motor type			Servo motor (24 VDC)					
	Encoder			Incremental					
	Power supply voltage [V]			24 VDC ±10%					
	Power [W]*7 *9			Max. power 59			Max. power 96		
Lock unit specifications	Type*8			Non-magnetizing lock					
	Holding force [N]			20	39	78	78	157	294
	Power [W]*9			2.9			5		
	Rated voltage [V]			24 VDC ±10%					

*1 Horizontal: An external guide is necessary to support the load (Friction coefficient of guide: 0.1 or less). The actual work load and transfer speed change according to the condition of the external guide.
Vertical: Check the "Model Selection" on page 517 for details.
Set the acceleration/deceleration values to be 3000 [mm/s²] or less.
*2 Pushing force accuracy is ±20% (F.S.).
*3 The thrust setting values for LEYG16□A□ are 60% to 95% and for LEYG25□A□ are 70% to 95%. The pushing force values change according to the duty ratio and pushing speed. Check the "Model Selection" on page 518.
*4 The allowable speed for the pushing operation
*5 A reference value for correcting errors in reciprocal operation
*6 Impact resistance: No malfunction occurred when the actuator was tested with a drop tester in both an axial direction and a perpendicular direction to the lead screw. (The test was performed with the actuator in the initial state.)
Vibration resistance: No malfunction occurred in a test ranging between 45 to 2000 Hz. The test was performed in both an axial direction and a perpendicular direction to the lead screw. (The test was performed with the actuator in the initial state.)
*7 Indicates the max. power during operation (including the controller). This value can be used for the selection of the power supply.
*8 With lock only
*9 For an actuator with lock, add the power for the lock.

Weight

Weight: Top Side Parallel Motor Type

Model		LEYG16M					LEYG25M							LEYG32M						
Stroke [mm]		30	50	100	150	200	30	50	100	150	200	250	300	30	50	100	150	200	250	300
Product weight [kg]	Step motor	0.83	0.97	1.20	1.49	1.66	1.67	1.86	2.18	2.60	2.94	3.28	3.54	2.91	3.17	3.72	4.28	4.95	5.44	5.88
	Servo motor	0.83	0.97	1.20	1.49	1.66	1.63	1.82	2.14	2.56	2.90	3.24	3.50	—	—	—	—	—	—	—

Model		LEYG16L					LEYG25L							LEYG32L						
Stroke [mm]		30	50	100	150	200	30	50	100	150	200	250	300	30	50	100	150	200	250	300
Product weight [kg]	Step motor	0.84	0.97	1.14	1.43	1.58	1.68	1.89	2.13	2.56	2.82	3.14	3.38	2.91	3.18	3.57	4.12	4.66	5.17	5.56
	Servo motor	0.84	0.97	1.14	1.43	1.58	1.64	1.85	2.09	2.52	2.78	3.10	3.34	—	—	—	—	—	—	—

Model		LEYG40M							LEYG40L						
Stroke [mm]		30	50	100	150	200	250	300	30	50	100	150	200	250	300
Product weight [kg]	Step motor	3.21	3.47	4.02	4.58	5.25	5.74	6.18	3.21	3.48	3.87	4.42	4.96	5.47	5.86
	Servo motor	—	—	—	—	—	—	—	—	—	—	—	—	—	—

Weight: In-line Motor Type

Model		LEYG16M					LEYG25M							LEYG32M						
Stroke [mm]		30	50	100	150	200	30	50	100	150	200	250	300	30	50	100	150	200	250	300
Product weight [kg]	Step motor	0.83	0.97	1.20	1.49	1.66	1.66	1.85	2.17	2.59	2.93	3.27	3.53	2.90	3.16	3.71	4.27	4.94	5.43	5.87
	Servo motor	0.83	0.97	1.20	1.49	1.66	1.62	1.81	2.13	2.55	2.89	3.23	3.49	—	—	—	—	—	—	—

Model		LEYG16L					LEYG25L							LEYG32L						
Stroke [mm]		30	50	100	150	200	30	50	100	150	200	250	300	30	50	100	150	200	250	300
Product weight [kg]	Step motor	0.84	0.97	1.14	1.43	1.58	1.67	1.88	2.12	2.55	2.81	3.13	3.37	2.90	3.17	3.56	4.11	4.65	5.16	5.55
	Servo motor	0.84	0.97	1.14	1.43	1.58	1.63	1.84	2.08	2.51	2.77	3.09	3.33	—	—	—	—	—	—	—

Model		LEYG40M							LEYG40L						
Stroke [mm]		30	50	100	150	200	250	300	30	50	100	150	200	250	300
Product weight [kg]	Step motor	3.20	3.46	4.01	4.57	5.24	5.73	6.17	3.20	3.47	3.86	4.41	4.95	5.46	5.85
	Servo motor	—	—	—	—	—	—	—	—	—	—	—	—	—	—

Additional Weight

[kg]

Size	16	25	32	40
Lock	0.12	0.26	0.53	0.53
Motor cover	0.02	0.03	0.04	0.05
Lock/Motor cover	0.16	0.32	0.61	0.62

Construction

Top side parallel motor type

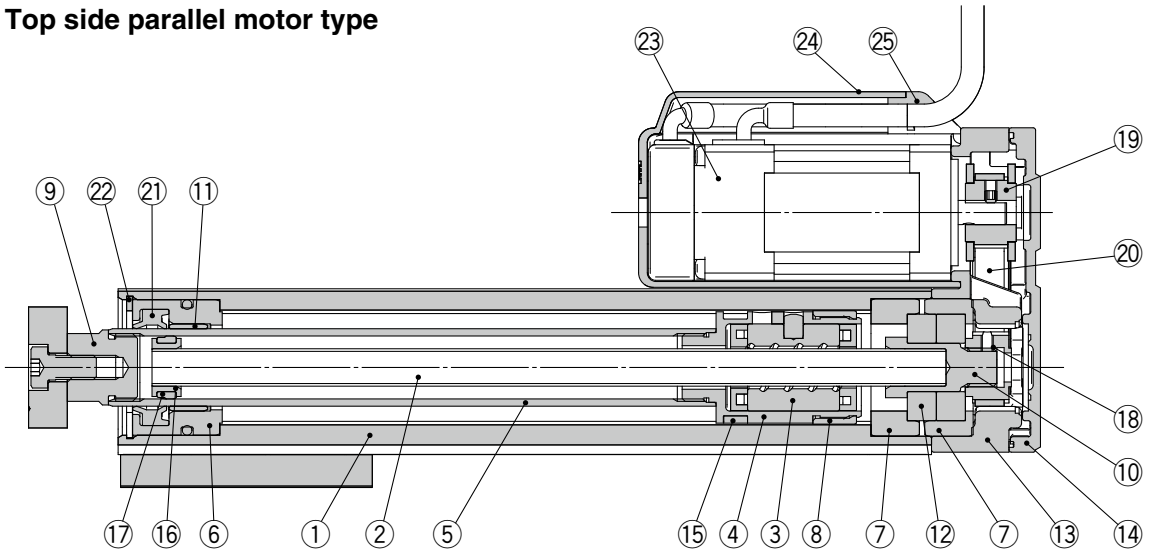

Top side parallel motor type
With lock/motor cover

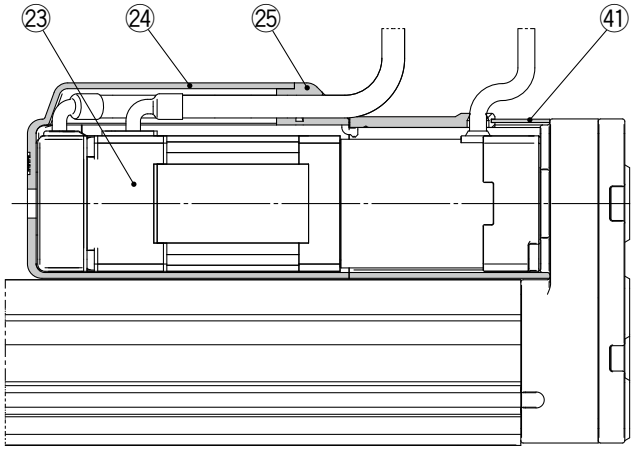

In-line motor type

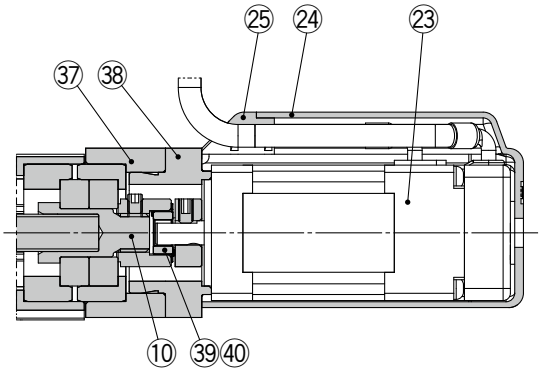

In-line motor type
With lock/motor cover

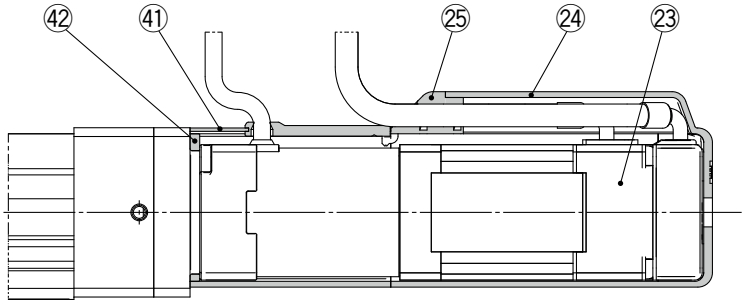

Construction

LEYG□M

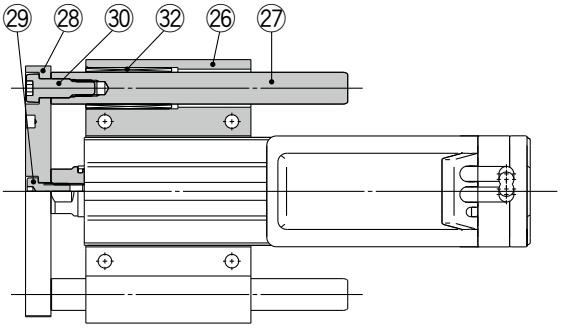

LEYG$^{16}_{25}_{32}_{40}$M: 50st or less

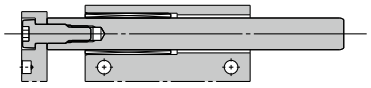

LEYG$^{16}_{25}_{32}_{40}$M: Over 50st

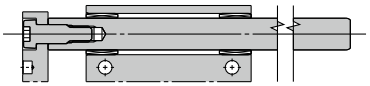

When grease retaining function selected

LEYG$^{25}_{32}_{40}$M□□$^{A}_{B}_{C}$-□□F: 50st or less

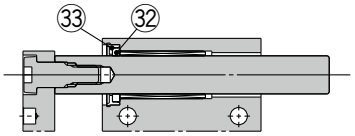

LEYG$^{25}_{32}_{40}$M□□$^{A}_{B}_{C}$-□□F: Over 50st

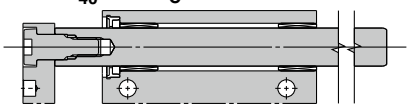

∗ Felt material is inserted to retain grease at the sliding part of the sliding bearing. This lengthens the life of the sliding part, but does not guarantee it permanently.

LEYG□L

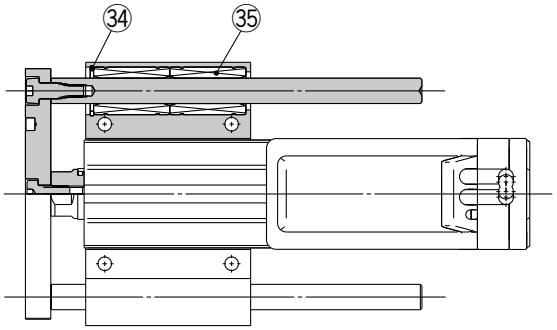

LEYG16L: 30st or less
LEYG$^{25}_{32}_{40}$L: 100st or less

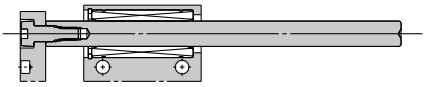

LEYG16L: Over 30st, 100st or less

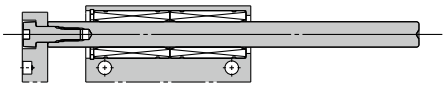

LEYG$^{16}_{25}_{32}_{40}$L: Over 100st

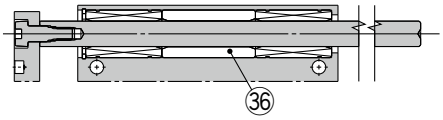

Component Parts

No.	Description	Material	Note
1	**Body**	Aluminum alloy	Anodized
2	**Ball screw shaft**	Alloy steel	
3	**Ball screw nut**	Synthetic resin/Alloy steel	
4	**Piston**	Aluminum alloy	
5	**Piston rod**	Stainless steel	Hard chrome plating
6	**Rod cover**	Aluminum alloy	
7	**Bearing holder**	Aluminum alloy	
8	**Rotation stopper**	Synthetic resin	
9	**Socket**	Free cutting carbon steel	Nickel plating
10	**Connected shaft**	Free cutting carbon steel	Nickel plating
11	**Bushing**	Bearing alloy	
12	**Bearing**	—	
13	**Return box**	Aluminum die-cast	Coating
14	**Return plate**	Aluminum die-cast	Coating
15	**Magnet**	—	
16	**Wear ring holder**	Stainless steel	Stroke 101 mm or more
17	**Wear ring**	Synthetic resin	Stroke 101 mm or more
18	**Screw shaft pulley**	Aluminum alloy	
19	**Motor pulley**	Aluminum alloy	
20	**Belt**	—	
21	**Seal**	NBR	
22	**Retaining ring**	Steel for spring	Phosphate coated
23	**Motor**	—	
24	**Motor cover**	Synthetic resin	Only “With motor cover”
25	**Grommet**	Synthetic resin	Only “With motor cover”
26	**Guide attachment**	Aluminum alloy	Anodized
27	**Guide rod**	Carbon steel	

No.	Description	Material	Note
28	**Plate**	Aluminum alloy	Anodized
29	**Plate mounting cap screw**	Carbon steel	Nickel plating
30	**Guide cap screw**	Carbon steel	Nickel plating
31	**Sliding bearing**	Bearing alloy	
32	**Lube-retainer**	Felt	
33	**Holder**	Synthetic resin	
34	**Retaining ring**	Steel for spring	Phosphate coating
35	**Ball bushing**	—	
36	**Spacer**	Aluminum alloy	Chromating
37	**Motor block**	Aluminum alloy	Anodized
38	**Motor adapter**	Aluminum alloy	Anodized/LEY16, 25 only
39	**Hub**	Aluminum alloy	
40	**Spider**	NBR	
41	**Motor cover with lock**	Aluminum alloy	Only “With lock/motor cover”
42	**Cover support**	Aluminum alloy	Only “With lock/motor cover”

Replacement Parts/Belt

No.	Size	Order no.
20	**16**	LE-D-2-1
	25	LE-D-2-2
	32, 40	LE-D-2-3

Replacement Parts/Grease Pack

Applied portion	Order no.
Piston rod	GR-S-010 (10 g)
Guide rod	GR-S-020 (20 g)

Dimensions: Top Side Parallel Motor

∗1 This is the range within which the rod can move when it returns to origin. Make sure that workpieces mounted on the rod do not interfere with other workpieces or the facilities around the rod.
∗2 Position after returning to origin
∗3 [ ] for when the direction of return to origin has changed
∗4 Through holes cannot be used for size 32/40 with strokes of 50 mm or less.

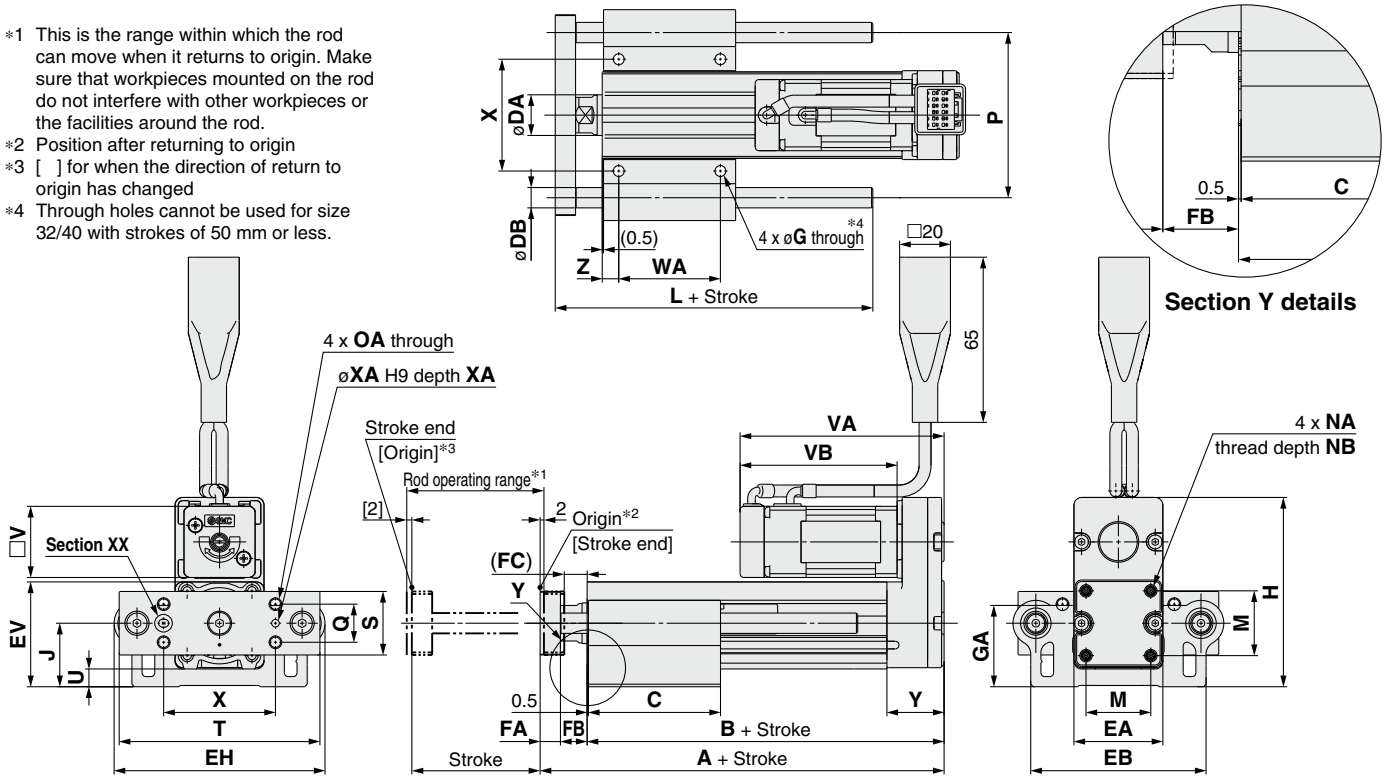

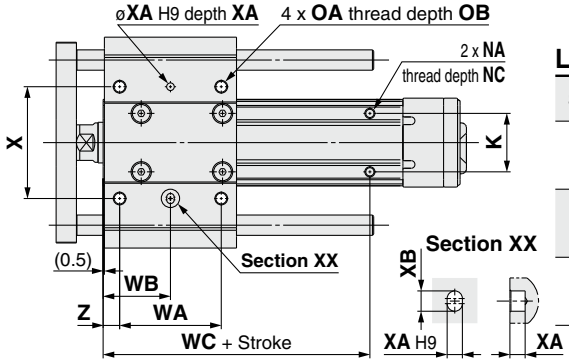

LEYG□L (Ball bushing bearing) [mm]

Size	Stroke range	L	DB
16	30 to 100	75	8
	105 to 200	105	
25	30 to 110	91	10
	115 to 190	115	
	195 to 300	133	
32 40	30 to 110	97.5	13
	115 to 190	116.5	
	195 to 300	134	

LEYG□M (Sliding bearing) [mm]

Size	Stroke range	L	DB
16	30 to 60	51.5	10
	65 to 100	74.5	
	105 to 200	105	
25	30 to 55	67.5	12
	60 to 185	100.5	
	190 to 300	138	
32 40	30 to 50	74	16
	55 to 180	107	
	185 to 300	144	

LEYG□M, LEYG□L Common

[mm]

Size	Stroke range	A	B	C	DA	EA	EB	EH	EV	FA	FB	FC	G	GA	H	J	K	M	NA	NB	NC
16	30 to 35	109	90.5	37	16	35	69	83	41.1	8	10.5	8.5	4.3	31.8	74.3	24.8	23	25.5	M4 x 0.7	7	5.5
	40 to 100			52																	
	105 to 200	129	110.5	82																	
25	30 to 35	141.5	116	50	20	46	85	103	52.3	11	14.5	12.5	5.4	40.3	98.8	30.8	29	34	M5 x 0.8	8	6.5
	40 to 100			67.5																	
	105 to 120	166.5	141																		
	125 to 200			84.5																	
	205 to 300			102																	
32 40	30 to 35	160.5	130	55	25	60	101	123	63.8	12	18.5	16.5	5.4	50.3	125.3	38.3	30	40	M6 x 1.0	10	8.5
	40 to 100			68																	
	105 to 120	190.5	160																		
	125 to 200			85																	
	205 to 300			102																	

Size	Stroke range	OA	OB	P	Q	S	T	U	V	Step motor VA	Step motor VB	Servo motor VA	Servo motor VB	WA	WB	WC	X	XA	XB	Y	Z
16	30 to 35	M5 x 0.8	10	65	15	25	79	6.8	28	80.3	61.8	81	62.5	25	19	55	44	3	4	22.5	6.5
	40 to 100													40	26.5						
	105 to 200													70	41.5	75					
25	30 to 35	M6 x 1.0	12	80	18	30	95	6.8	42	85.4	63.4	81.6	59.6	35	26	70	54	4	5	26.5	8.5
	40 to 100													50	33.5						
	105 to 120															95					
	125 to 200													70	43.5						
	205 to 300													85	51						
32	30 to 35	M6 x 1.0	12	95	28	40	117	7.3	56.4	95.4	68.4	—	—	40	28.5	75	64	5	6	34	8.5
	40 to 100													50	33.5						
	105 to 120															105					
	125 to 200													70	43.5						
	205 to 300													85	51						
40	30 to 35	M6 x 1.0	12	95	28	40	117	7.3	56.4	117.4	90.4	—	—	40	28.5	75	64	5	6	34	8.5
	40 to 100													50	33.5						
	105 to 120															105					
	125 to 200													70	43.5						
	205 to 300													85	51						

Dimensions: Top Side Parallel Motor

With motor cover: LEYG 16/25/32/40 □□ A/B/C -□C

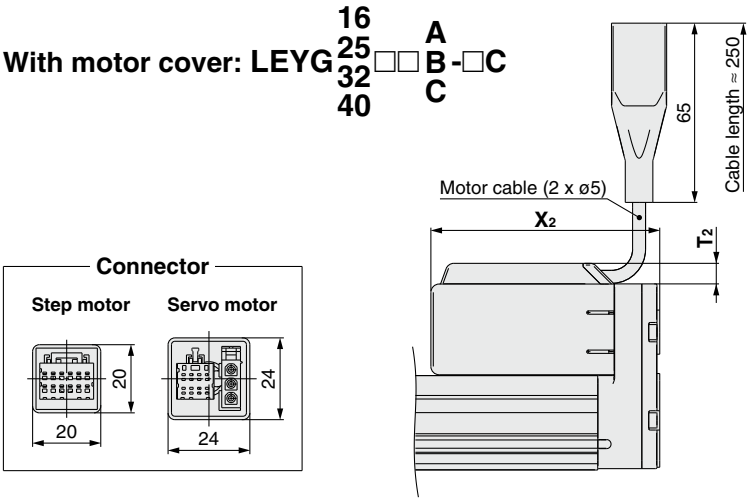

[mm]

Size	T_2	X_2
16	7.5	83
25	7.5	88.5
32	7.5	98.5
40	7.5	120.5

Motor cover material: Synthetic resin

With lock: LEYG 16/25/32/40 □□ A/B/C -□B

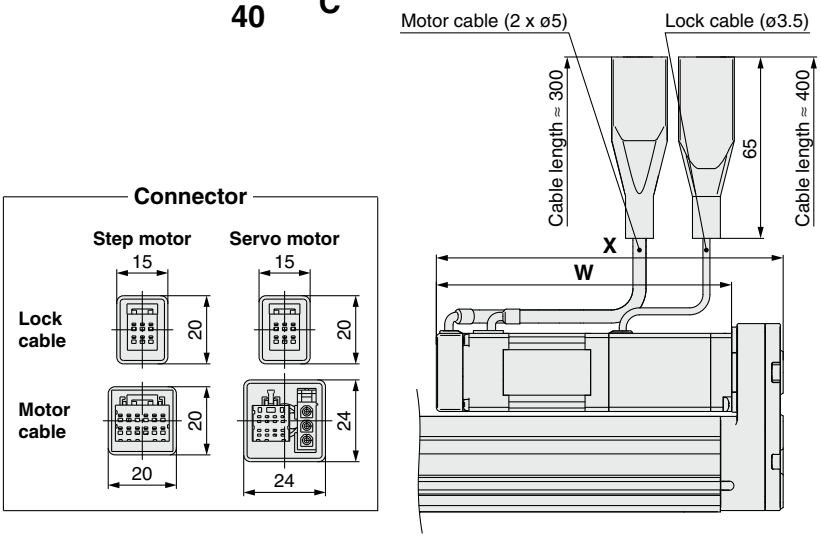

[mm]

Size	Step motor		Servo motor	
	W	X	W	X
16	103.3	121.8	104.0	122.5
25	103.9	125.9	100.1	122.1
32	111.4	138.4	—	—
40	133.4	160.4	—	—

With lock/motor cover: LEYG 16/25/32/40 □□ A/B/C -□W

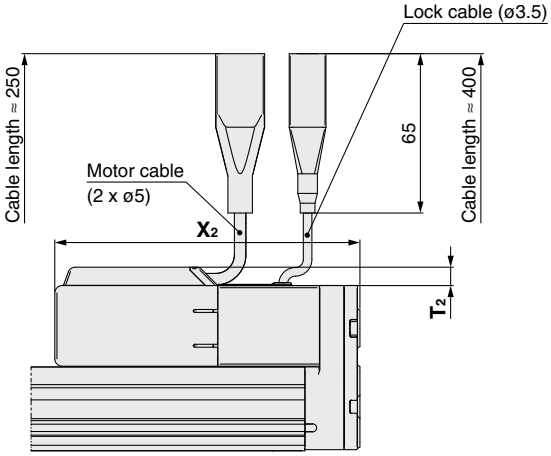

[mm]

Size	T_2	X_2
16	7.5	124.5
25	7.5	129
32	7.5	141.5
40	7.5	163.5

Dimensions: In-line Motor

∗1 This is the range within which the rod can move when it returns to origin. Make sure that workpieces mounted on the rod do not interfere with other workpieces or the facilities around the rod.
∗2 Position after returning to origin
∗3 [ ] for when the direction of return to origin has changed

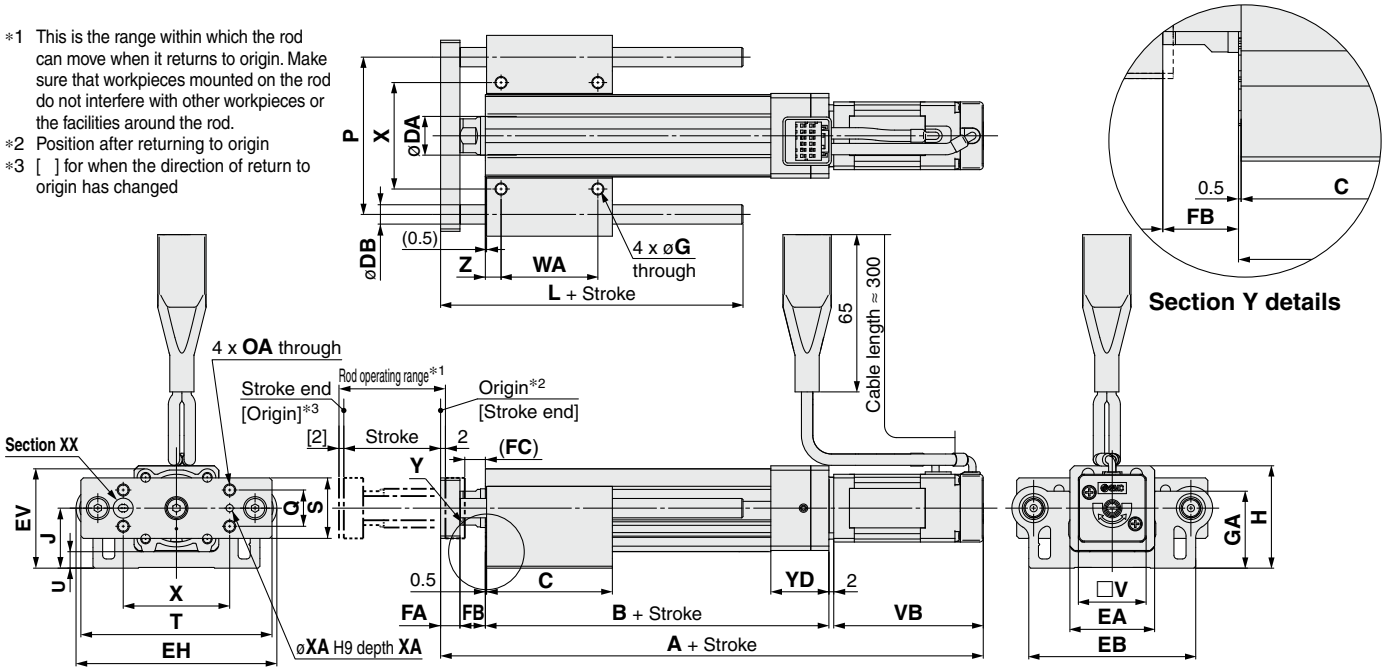

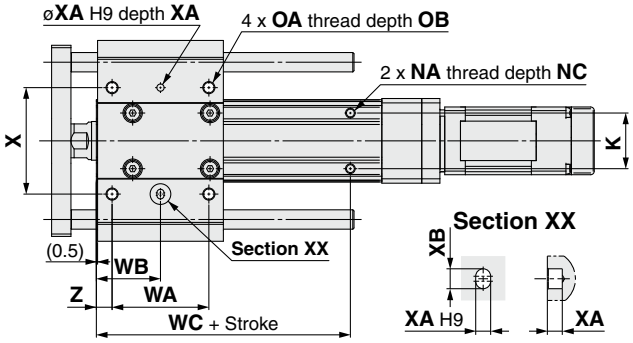

LEYG□L (Ball bushing bearing) [mm]

Size	Stroke range	L	DB
16	30 to 100	75	8
	105 to 200	105	
25	30 to 110	91	10
	115 to 190	115	
	195 to 300	133	
32 40	30 to 110	97.5	13
	115 to 190	116.5	
	195 to 300	134	

LEYG□M (Sliding bearing) [mm]

Size	Stroke range	L	DB
16	30 to 60	51.5	10
	65 to 100	74.5	
	105 to 200	105	
25	30 to 55	67.5	12
	60 to 185	100.5	
	190 to 300	138	
32 40	30 to 50	74	16
	55 to 180	107	
	185 to 300	144	

LEYG□M, LEYG□L Common

[mm]

Size	Stroke range	A Step motor	A Servo motor	B	C	DA	EA	EB	EH	EV	FA	FB	FC	G	GA	H	J	K	NA	NC
16	30 to 35	174.3	175	92	37	16	35	69	83	41.1	8	10.5	8.5	4.3	31.8	42.3	24.8	23	M4 x 0.7	5.5
	40 to 100				52															
	105 to 200	194.3	195	112	82															
25	30 to 35	206.4	202.6	115.5	50	20	45	85	103	52.3	11	14.5	12.5	5.4	40.3	53.3	30.8	29	M5 x 0.8	6.5
	40 to 100				67.5															
	105 to 120	231.4	227.6	140.5																
	125 to 200				84.5															
	205 to 300				102															
32	30 to 35	228.9	—	128	55	25	60	101	123	63.8	12	18.5	16.5	5.4	50.3	68.3	38.3	30	M6 x 1.0	8.5
	40 to 100				68															
	105 to 120	258.9	—	158																
	125 to 200				85															
	205 to 300				102															
40	30 to 35	250.9	—	128	55	25	60	101	123	63.8	12	18.5	16.5	5.4	50.3	68.3	38.3	30	M6 x 1.0	8.5
	40 to 100				68															
	105 to 120	280.9	—	158																
	125 to 200				85															
	205 to 300				102															

Size	Stroke range	OA	OB	P	Q	S	T	U	V	VB Step motor	VB Servo motor	WA	WB	WC	X	XA	XB	YD	Z
16	30 to 35	M5 x 0.8	10	65	15	25	79	6.8	28	61.8	62.5	25	19	55	44	3	4	24	6.5
	40 to 100											40	26.5						
	105 to 200											70	41.5	75					
25	30 to 35	M6 x 1.0	12	80	18	30	95	6.8	42	63.4	59.6	35	26	70	54	4	5	26	8.5
	40 to 100											50	33.5						
	105 to 120													95					
	125 to 200											70	43.5						
	205 to 300											85	51						
32	30 to 35	M6 x 1.0	12	95	28	40	117	7.3	56.4	68.4	—	40	28.5	75	64	5	6	32	8.5
	40 to 100											50	33.5						
	105 to 120													105					
	125 to 200											70	43.5						
	205 to 300											85	51						
40	30 to 35	M6 x 1.0	12	95	28	40	117	7.3	56.4	90.4	—	40	28.5	75	64	5	6	32	8.5
	40 to 100											50	33.5						
	105 to 120													105					
	125 to 200											70	43.5						
	205 to 300											85	51						

Dimensions: In-line Motor

With motor cover: LEYG 16/25/32/40 □D□ A/B/C -□C

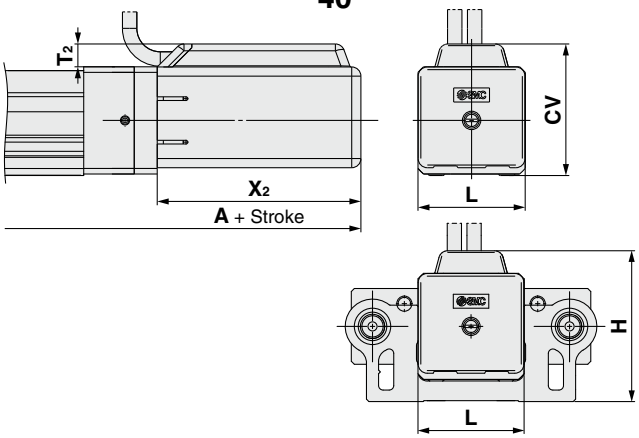

[mm]

Size	Stroke range	A	T2	X2	L	H	CV
16	Up to 100	177	7.5	66.5	35	49.8	43
	105 to 200	197					
25	Up to 100	209.5	7.5	68.5	46	61.3	54.5
	105 to 300	234.5					
32	Up to 100	232	7.5	73.5	60	75.8	68.5
	105 to 300	262					
40	Up to 100	254	7.5	95.5	60	75.8	68.5
	105 to 300	284					

With lock: LEYG 16/25/32/40 □D□ A/B/C -□B

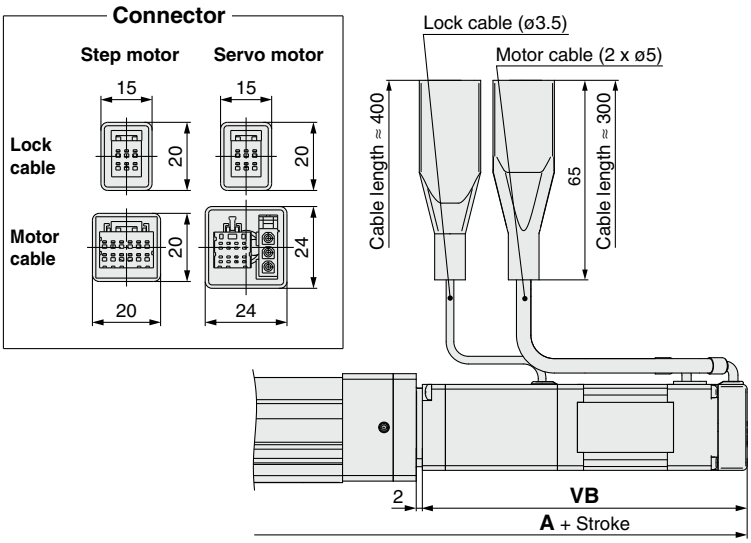

[mm]

Size	Stroke range	Step motor	Servo motor	Step motor	Servo motor
		A		VB	
16	Up to 100	215.8	216.5	103.3	104
	105 to 200	235.8	236.5		
25	Up to 100	246.9	243.1	103.9	100.1
	105 to 300	271.9	268.1		
32	Up to 100	271.9	—	111.4	—
	105 to 300	301.9	—		
40	Up to 100	293.9	—	133.4	—
	105 to 300	323.9	—		

With lock/motor cover: LEYG 16/25/32/40 D□ A/B/C -□W

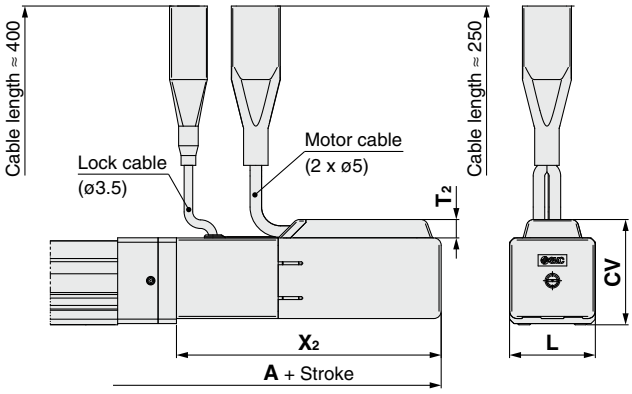

[mm]

Size	Stroke range	A	T2	X2	L	H	CV
16	Up to 100	218.5	7.5	108	35	49.8	43
	105 to 200	238.5					
25	Up to 100	250	7.5	109	46	61.3	54.4
	105 to 300	275					
32	Up to 100	275	7.5	116.5	60	75.8	68.5
	105 to 300	305					
40	Up to 100	297	7.5	138.5	60	75.8	68.5
	105 to 300	327					

Support Block

● Guide for support block application

When the stroke exceeds 100 mm and the mounting orientation is horizontal, the body will be bent. Mounting the support block is recommended. (Please order it separately from the models shown below.)

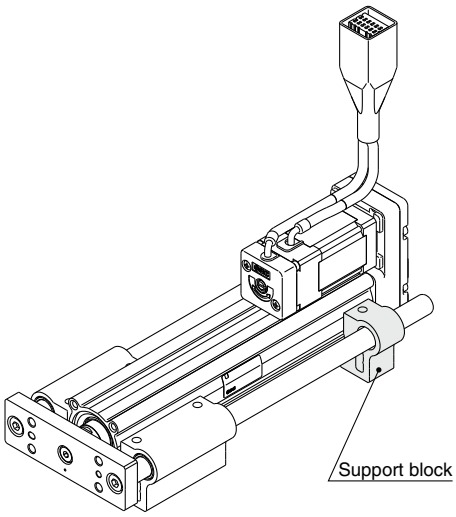

Support Block Model

LEYG-S016

● **Size**

016	For size 16
025	For size 25
032	For sizes 32, 40

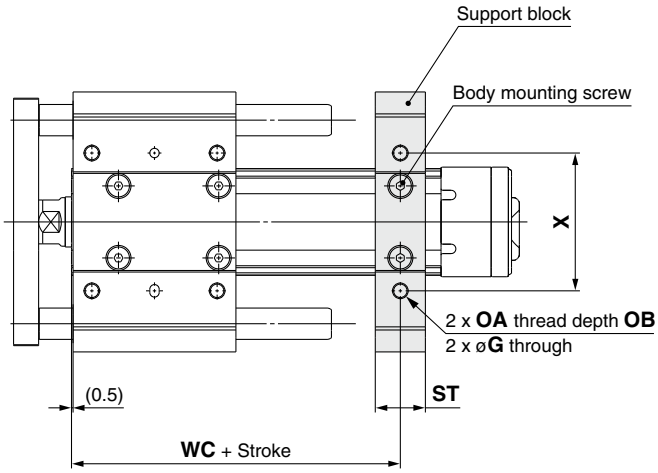

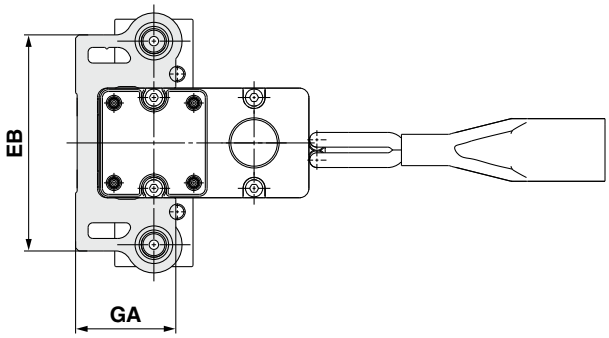

⚠Caution

Do not install the body using only a support block.
The support block should be used only for support.

[mm]

Size	Model	Stroke range	EB	G	GA	OA	OB	ST	WC	X
16	**LEYG-S016**	Up to 100	69	4.3	31.8	M5 x 0.8	10	16	55	44
		105 to 200							75	
25	**LEYG-S025**	Up to 100	85	5.4	40.3	M6 x 1.0	12	20	70	54
		105 to 300							95	
32 40	**LEYG-S032**	Up to 100	101	(5.4)	(50.3)	M6 x 1.0	12	22	75	64
		105 to 300							105	

∗ Two body mounting screws are included with the support block.
∗ The through holes of the LEYG-S032 cannot be used for the top side parallel motor type. Use taps on the bottom.

Guide Rod Type

LEYG Series LEYG25, 32

∗ For details, refer to page 1343 and onward.

RoHS

LECY□ Series ▶p. 567

How to Order

LEY H G 25 M □ S2 B – 100 □ □ – S 2 A1 □

❶ ❷ ❸ ❹ ❺ ❻ ❼ ❽ ❾ ❿ ⓫ ⓬ ⓭

❶ Accuracy

Nil	Basic type
H	High-precision type

❷ Size

25
32

❸ Bearing type

M	Sliding bearing
L	Ball bushing bearing

❹ Motor mounting position

Nil	Top side parallel
D	In-line

❺ Motor type∗1

Symbol	Type	Output [W]	Actuator size	Compatible drivers∗3
S2∗1	AC servo motor (Incremental encoder)	100	25	LECSA□-S1
S3		200	32	LECSA□-S3
T6∗2	AC servo motor (Absolute encoder)	100	25	LECSB2-T5 LECSC2-T5 LECSS2-T5 LECSN2-T5-□
T7		200	32	LECSB2-T7 LECSC2-T7 LECSS2-T7 LECSND2-T7-□

∗1 For motor type S2, the compatible driver part number suffix is S1.
∗2 For motor type T6, the compatible driver part number is LECS□2-T5.
∗3 For details on the driver, refer to page 1100.

❻ Lead [mm]

Symbol	LEYG25	LEYG32∗1
A	12	16 (20)
B	6	8 (10)
C	3	4 (5)

∗1 The values shown in ( ) are the leads for the size 32 top side parallel motor type. (Equivalent leads which include the pulley ratio [1.25:1])

❼ Stroke [mm]

30	30
to	to
300	300

∗ For details, refer to the applicable stroke table below.
∗ There is a limit for mounting the size 32 top side parallel motor type and strokes of 50 mm or less. Refer to the dimensions.

❽ Motor option

Nil	Without option
B	With lock

❾ Guide option

Nil	Without option
F	With grease retaining function

∗ Only available for size 25 and 32 sliding bearings (Refer to the "Construction" on page 562.)

❿ Cable type∗1 ∗2

Nil	Without cable
S	Standard cable
R	Robotic cable

∗1 A motor cable and encoder cable are included with the product. (A lock cable is also included if motor option "B: With lock" is selected.)
∗2 Standard cable entry direction is
• Top side parallel: (A) Axis side
• In-line: (B) Counter axis side
(Refer to page 1123 for details.)

⓫ Cable length∗1 [m]

Nil	Without cable
2	2
5	5
A	10

∗1 The length of the motor, encoder, and lock cables are the same.

Applicable Stroke Table

●: Standard

Model \ Stroke [mm]	30	50	100	150	200	250	300	Manufacturable stroke range
LEYG25	●	●	●	●	●	●	●	15 to 300
LEYG32	●	●	●	●	●	●	●	20 to 300

∗ Please contact SMC for non-standard strokes as they are produced as special orders.

For auto switches, refer to pages 503 to 505.

Motor mounting position: Parallel

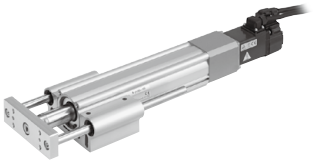
Motor mounting position: In-line

⓬ Driver type*1

	Compatible drivers	Power supply voltage [V]
Nil	Without driver	—
A1	LECSA1-S□	100 to 120
A2	LECSA2-S□	200 to 230
B2	LECSB2-T□	200 to 240
C2	LECSC2-T□	200 to 230
S2	LECSS2-T□	200 to 240
N2	LECSN2-T5	200 to 240
E2	LECSN2-T5-E	200 to 240
92	LECSN2-T5-9	200 to 240
P2	LECSN2-T5-P	200 to 240
ND2	LECSND2-T□	200 to 240
ED2	LECSND2-T□-E	200 to 240
9D2	LECSND2-T□-9	200 to 240
PD2	LECSND2-T□-P	200 to 240

*1 When a driver type is selected, a cable is included. Select the cable type and cable length.
Example)
S2S2: Standard cable (2 m) + Driver (LECSS2)
S2: Standard cable (2 m)
Nil: Without cable and driver

* When selecting "T6" for the motor type, select one of the following LECSN□-T series drivers: "N2," "E2," "92," or "P2."

⓭ I/O cable length [m]*1

Nil	Without cable
H	Without cable (Connector only)
1	1.5

*1 When "Nil: Without driver" is selected for the driver type, only "Nil: Without cable" can be selected. Refer to page 1124 if an I/O cable is required. (Options are shown on page 1124.)

Use of auto switches for the guide rod type LEYG series
· Auto switches must be inserted from the front side with the rod (plate) sticking out.
· Auto switches cannot be fixed with the parts hidden behind the guide attachment (the side of the rod that sticks out).
· Please contact SMC when using auto switches on the side of the rod that sticks out, as it is produced as a special order.

Compatible Drivers

Driver type	**Pulse input type/ Positioning type**	**Pulse input type**	**CC-Link direct input type**	**SSCNETⅢ/H type**	**Network card type**
Series	**LECSA**	**LECSB-T**	**LECSC-T**	**LECSS-T**	**LECSN□-T**
Number of point tables*1	Up to 7	Up to 255	Up to 255 (2 stations occupied)	—	Up to 255
Pulse input	○	○	—	—	—
Applicable network	—	—	CC-Link	SSCNETⅢ/H	PROFINET EtherCAT EtherNet/IP™
Control encoder	Incremental 17-bit encoder	Absolute 22-bit encoder	Absolute 18-bit encoder	Absolute 22-bit encoder	Absolute 22-bit encoder
Communication function	USB communication	USB communication, RS422 communication	USB communication, RS422 communication	USB communication	USB communication
Power supply voltage [V]	100 to 120 VAC (50/60 Hz) 200 to 230 VAC (50/60 Hz)	200 to 240 VAC (50/60 Hz)	200 to 230 VAC (50/60 Hz)	200 to 240 VAC (50/60 Hz)	200 to 240 VAC (50/60 Hz)
Reference page	1109				

*1 The LECSN□-T point table mode is only available for PROFINET and EtherCAT.

Specifications

	Model		LEYG25□S2/T6 (Parallel) LEYG25□DS2/T6 (In-line)			LEYG32□S3/T7 (Parallel)			LEYG32□DS3/T7 (In-line)		
Actuator specifications	Work load [kg]	Horizontal*1	18	50	50	30	60	60	30	60	60
		Vertical	7	15	29	7	17	35	10	22	44
	Force [N]*2 (Set value: 15 to 30%)*8		65 to 131	127 to 255	242 to 485	79 to 157	154 to 308	294 to 588	98 to 197	192 to 385	368 to 736
	Max. speed [mm/s]		900	450	225	1200	600	300	1000	500	250
	Pushing speed [mm/s]*3		35 or less			30 or less			30 or less		
	Max. acceleration/deceleration [mm/s²]		5000			5000					
	Positioning repeatability [mm]	Basic type	±0.02								
		High-precision type	±0.01								
	Lost motion*4 [mm]	Basic type	0.1 or less								
		High-precision type	0.05 or less								
	Lead [mm] (including pulley ratio)		12	6	3	20	10	5	16	8	4
	Impact/Vibration resistance [m/s²]*5		50/20			50/20					
	Actuation type		Ball screw + Belt [1:1]/Ball screw			Ball screw + Belt [1.25:1]			Ball screw		
	Guide type		Sliding bearing (LEYG□M), Ball bushing bearing (LEYG□L)								
	Operating temperature range [°C]		5 to 40			5 to 40					
	Operating humidity range [%RH]		90 or less (No condensation)			90 or less (No condensation)					
	Enclosure		IP40								
	Regeneration option		May be required depending on speed and work load (Refer to page 523.)								
Electric specifications	Motor output/Size		100 W/□40			200 W/□60					
	Motor type		AC servo motor (100/200 VAC)			AC servo motor (100/200 VAC)					
	Encoder*9		Motor type S2, S3: Incremental 17-bit encoder (Resolution: 131072 p/rev) Motor type T6, T7: Absolute 22-bit encoder (Resolution: 4194304 p/rev) (For LECSB2-T□, LECSS2-T□, LECSN□-T□) Motor type T6, T7: Absolute 18-bit encoder (Resolution: 262144 p/rev) (For LECSC2-T□)								
	Power [W]*6		Max. power 445			Max. power 724			Max. power 724		
Lock unit specifications	Type*7		Non-magnetizing lock			Non-magnetizing lock					
	Holding force [N]		131	255	485	157	308	588	197	385	736
	Power at 20°C [W]		6.3			7.9			7.9		
	Rated voltage [V]		24 VDC$^{0}_{-10\%}$								

*1 This is the max. value of the horizontal work load. An external guide is necessary to support the load (Friction coefficient of guide: 0.1 or less). The actual work load changes according to the condition of the external guide. Confirm the load using the actual device.
*2 The force setting range (set values for the driver) for the force control with the torque control mode. Set it while referencing the "Force Conversion Graph" on page 524. The torque control mode is not available for the LECSC-T.
The drivers applicable to the pushing operation are "LECSB-T" and "LECSS-T."
The LECSB2-T is only applicable when the control method is positioning.
The point table is used to set the pushing operation settings.
To set the pushing operation settings, an additional dedicated file (pushing operation extension file) must be downloaded separately to be used with the setup software (MR Configurator2™: LEC-MRC2□). Please download this dedicated file from the SMC website: https://www.smcworld.com
When selecting the LECSS2-T, combine it with upper level equipment (such as the Simple Motion module manufactured by Mitsubishi Electric Corporation) which has a pushing operation function.
** For customer-provided PLC and motion controller setting and usage instructions, confirm with the retailer or manufacturer.
*3 The allowable collision speed for collision with the workpiece with the torque control mode
*4 A reference value for correcting errors in reciprocal operation
*5 Impact resistance: No malfunction occurred when the actuator was tested with a drop tester in both an axial direction and a perpendicular direction to the lead screw. (The test was performed with the actuator in the initial state.)
Vibration resistance: No malfunction occurred in a test ranging between 45 to 2000 Hz. The test was performed in both an axial direction and a perpendicular direction to the lead screw. (The test was performed with the actuator in the initial state.)
*6 Indicates the max. power during operation (including the driver)
When selecting the power supply capacity, refer to the power supply capacity in the operation manual of each driver.
*7 Only when motor option "With lock" is selected
*8 For motor types T6 and T7, the set value is 12 to 24%.
*9 For motor types T6 and T7, the resolution will change depending on the driver type.

Weight

Weight: Top Side Parallel Motor Type

[kg]

Series		LEYG25MS2/T6							LEYG32MS3/T7						
Stroke [mm]		30	50	100	150	200	250	300	30	50	100	150	200	250	300
Motor type	Incremental encoder	1.80	1.99	2.31	2.73	3.07	3.41	3.67	3.24	3.50	4.05	4.80	5.35	5.83	6.28
	Absolute encoder [T6/7]	1.8	2.0	2.4	2.8	3.1	3.5	3.7	3.2	3.4	4.0	4.7	5.3	5.7	6.2

Series		LEYG25LS2/T6							LEYG32LS3/T7						
Stroke [mm]		30	50	100	150	200	250	300	30	50	100	150	200	250	300
Motor type	Incremental encoder	1.81	2.02	2.26	2.69	2.95	3.27	3.51	3.24	3.51	3.9	4.64	5.06	5.56	5.96
	Absolute encoder [T6/7]	1.9	2.1	2.3	2.7	3.0	3.3	3.6	3.2	3.4	3.8	4.6	5.0	5.5	5.9

Weight: In-line Motor Type

[kg]

Series		LEYG25MDS2/T6							LEYG32MDS3/T7						
Stroke [mm]		30	50	100	150	200	250	300	30	50	100	150	200	250	300
Motor type	Incremental encoder	1.83	2.02	2.34	2.76	3.10	3.44	3.70	3.26	3.52	4.07	4.82	5.37	5.85	6.30
	Absolute encoder [T6/7]	1.9	2.1	2.4	2.8	3.1	3.5	3.7	3.2	3.4	4.0	4.7	5.3	5.8	6.2

Series		LEYG25LDS2/T6							LEYG32LDS3/T7						
Stroke [mm]		30	50	100	150	200	250	300	30	50	100	150	200	250	300
Motor type	Incremental encoder	1.84	2.05	2.29	2.72	2.98	3.30	3.54	3.26	3.53	3.92	4.66	5.08	5.58	5.98
	Absolute encoder [T6/7]	1.9	2.1	2.3	2.8	3.0	3.3	3.6	3.2	3.4	3.8	4.6	5.0	5.5	5.9

Additional Weight

[kg]

Size		25	32
Lock	Incremental encoder	0.20	0.40
	Absolute encoder [T6/7]	0.3	0.7

Construction

Motor mounting position: Top side parallel motor type

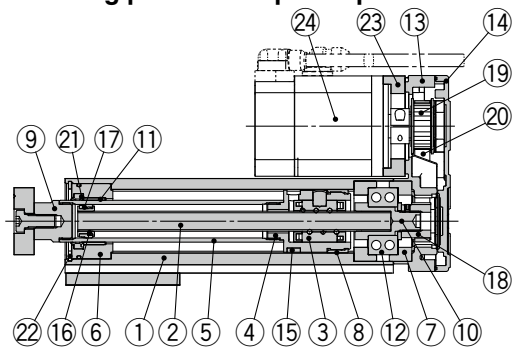

Motor mounting position: In-line type

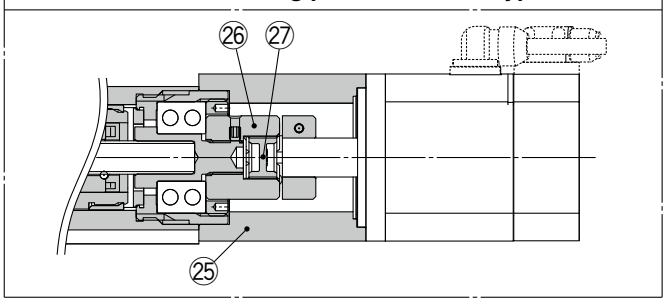

LEYG□M

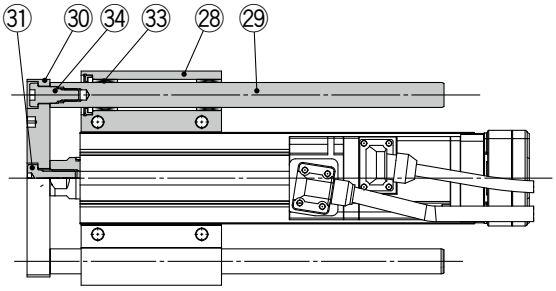

LEYG25/32M: 50st or less

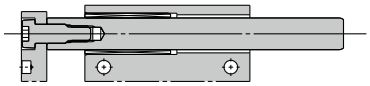

LEYG25/32M: Over 50st

When grease retaining function selected

LEYG25/32M: 50st or less

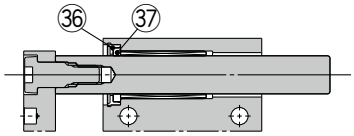

LEYG25/32M: Over 50st

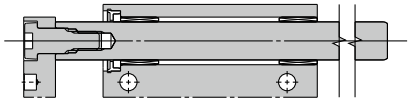

LEYG□L

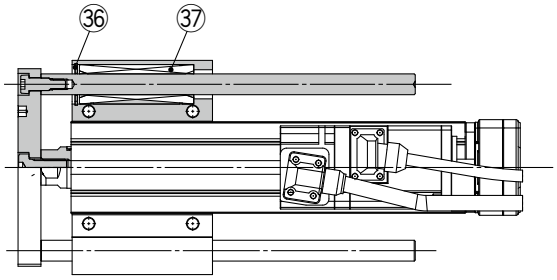

LEYG25/32L: 100st or less

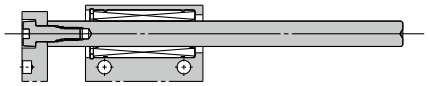

LEYG25/32L: Over 100st

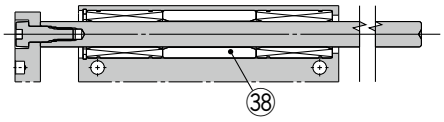

Component Parts

No.	Description	Material	Note
1	**Body**	Aluminum alloy	Anodized
2	**Ball screw shaft**	Alloy steel	
3	**Ball screw nut**	Synthetic resin/Alloy steel	
4	**Piston**	Aluminum alloy	
5	**Piston rod**	Stainless steel	Hard chrome plating
6	**Rod cover**	Aluminum alloy	
7	**Bearing holder**	Aluminum alloy	
8	**Rotation stopper**	Synthetic resin	
9	**Socket**	Free cutting carbon steel	Nickel plating
10	**Connected shaft**	Free cutting carbon steel	Nickel plating
11	**Bushing**	Bearing alloy	
12	**Bearing**	—	
13	**Return box**	Aluminum die-cast	Coating
14	**Return plate**	Aluminum die-cast	Coating
15	**Magnet**	—	
16	**Wear ring holder**	Stainless steel	Stroke 101 mm or more
17	**Wear ring**	Synthetic resin	Stroke 101 mm or more
18	**Screw shaft pulley**	Aluminum alloy	
19	**Motor pulley**	Aluminum alloy	
20	**Belt**	—	
21	**Seal**	NBR	
22	**Retaining ring**	Steel for spring	Phosphate coating
23	**Motor adapter**	Aluminum alloy	Coating
24	**Motor**	—	
25	**Motor block**	Aluminum alloy	Coating
26	**Hub**	Aluminum alloy	

No.	Description	Material	Note
27	**Spider**	Urethane	
28	**Guide attachment**	Aluminum alloy	Anodized
29	**Guide rod**	Carbon steel	
30	**Plate**	Aluminum alloy	Anodized
31	**Plate mounting cap screw**	Carbon steel	Nickel plating
32	**Guide cap screw**	Carbon steel	Nickel plating
33	**Sliding bearing**	Bearing alloy	
34	**Felt**	Felt	
35	**Holder**	Synthetic resin	
36	**Retaining ring**	Steel for spring	Phosphate coating
37	**Ball bushing**	—	
38	**Spacer**	Aluminum alloy	Chromating

Support Block

Size	Order no.
25	LEYG-S025
32	LEYG-S032

∗ Two body mounting screws are included with the support block.

Replacement Parts/Belt

Size	Order no.
25	LE-D-2-2
32	LE-D-2-4

Replacement Parts/Grease Pack

Applied portion	Order no.
Piston rod	GR-S-010 (10 g)
Guide rod	GR-S-020 (20 g)

Dimensions: Top Side Parallel Motor

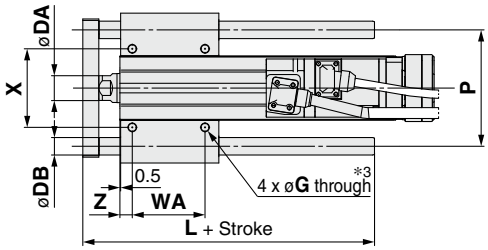

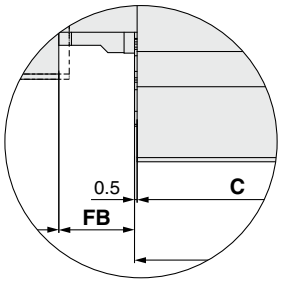

Section Y details

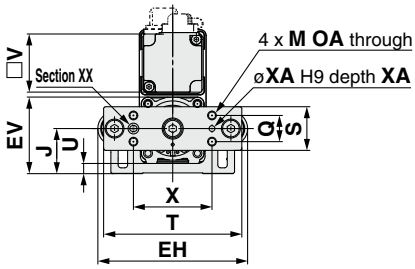

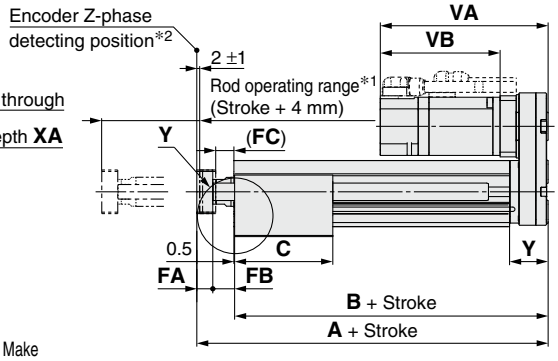

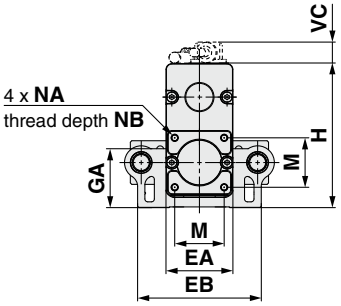

*1 This is the range within which the rod can move. Make sure that workpieces mounted on the rod do not interfere with other workpieces or the facilities around the rod.
*2 The Z-phase first detecting position from the stroke end of the motor side
*3 Through holes cannot be used for size 32 with strokes of 50 mm or less.

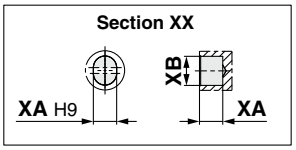

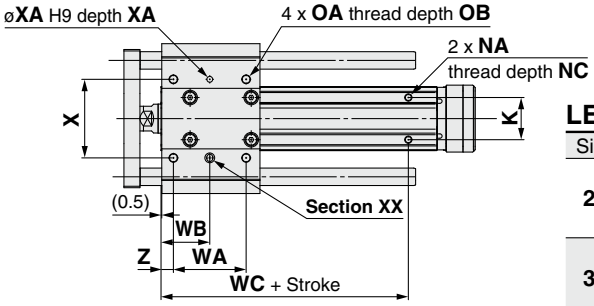

LEYG□L (Ball bushing bearing) [mm]

Size	Stroke range	L	DB
25	30 to 110	91	10
	115 to 190	115	
	195 to 300	133	
32	30 to 110	97.5	13
	115 to 190	116.5	
	195 to 300	134	

LEYG□M (Sliding bearing) [mm]

Size	Stroke range	L	DB
25	30 to 55	67.5	12
	60 to 185	100.5	
	190 to 300	138	
32	30 to 50	74	16
	55 to 180	107	
	185 to 300	144	

LEYG□M, LEYG□L Common [mm]

Size	Stroke range	A	B	C	DA	EA	EB	EH	EV	FA	FB	FC	G	GA	H	J	K	M	NA	NB	NC
25	30 to 35	141.5	116	50	20	46	85	103	52.3	11	14.5	12.5	5.4	40.3	98.8	30.8	29	34	M5 x 0.8	8	6.5
	40 to 100			67.5																	
	105 to 120	166.5	141																		
	125 to 200			84.5																	
	205 to 300			102																	
32	30 to 35	160.5	130	55	25	60	101	123	63.8	12	18.5	16.5	5.4	50.3	125.3	38.3	30	40	M6 x 1.0	10	8.5
	40 to 100			68																	
	105 to 120	190.5	160																		
	125 to 200			85																	
	205 to 300			102																	

Size	Stroke range	OA	OB	P	Q	S	T	U	V	WA	WB	WC	X	XA	XB	Y	Z
25	30 to 35	M6 x 1.0	12	80	18	30	95	6.8	40	35	26	70	54	4	5	26.5	8.5
	40 to 100									50	33.5						
	105 to 120											95					
	125 to 200									70	43.5						
	205 to 300									85	51						
32	30 to 35	M6 x 1.0	12	95	28	40	117	7.3	60	40	28.5	75	64	5	6	34	8.5
	40 to 100									50	33.5						
	105 to 120											105					
	125 to 200									70	43.5						
	205 to 300									85	51						

Size	Incremental encoder [S2/S3]						Absolute encoder [T6/T7]					
	Without lock			With lock			Without lock			With lock		
	VA	VB	VC	VA	VB	VC	VA	VB	VC	VA	VB	VC
25	120	87	14.1	156.9	123.9	15.8	115.4	82.4	14.1	156	123	15.8
32	128.2	88.2	17.1	156.8	116.8	17.1	116.6	76.6	17.1	153.4	113.4	17.1

Dimensions: In-line Motor

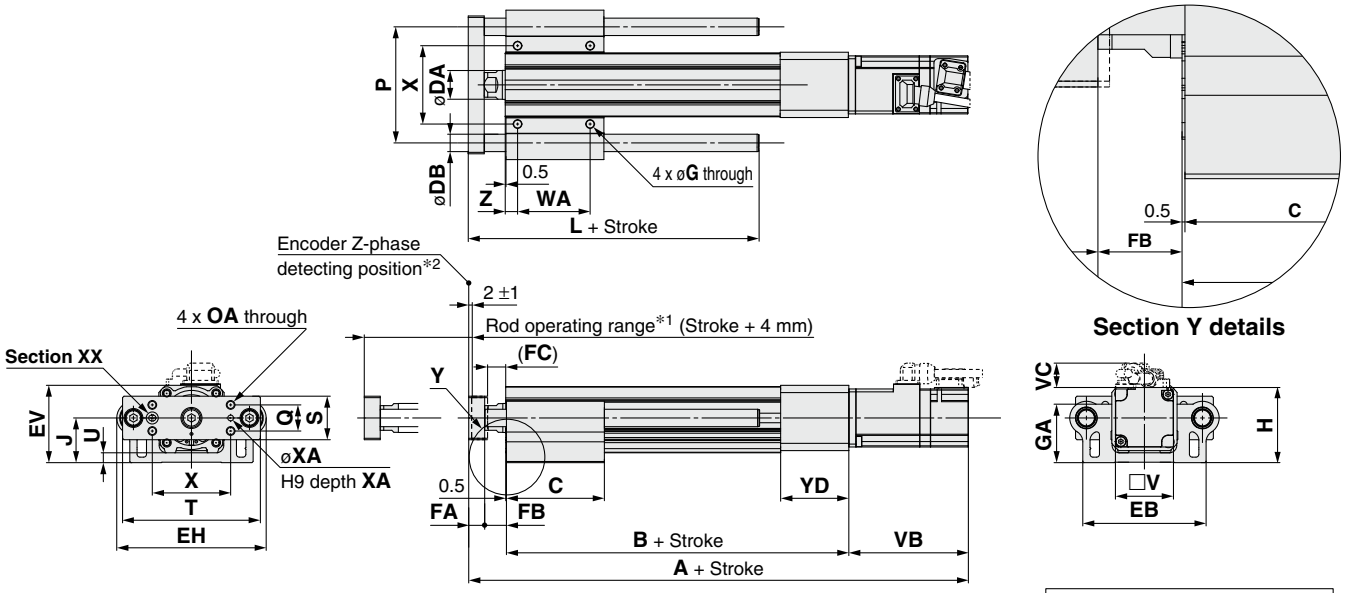

*1 This is the range within which the rod can move. Make sure that workpieces mounted on the rod do not interfere with other workpieces or the facilities around the rod.
*2 The Z-phase first detecting position from the stroke end of the motor side

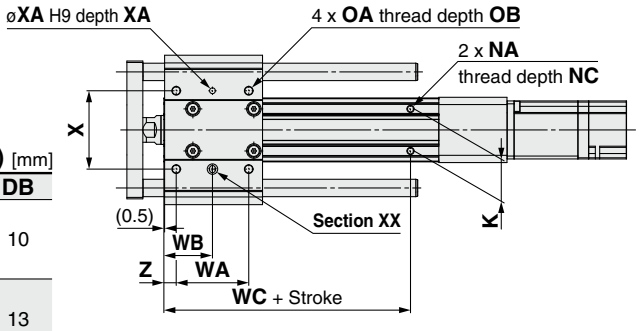

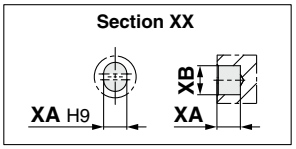

LEYG□L (Ball bushing bearing) [mm]

Size	Stroke range	L	DB
25	30 to 110	91	10
	115 to 190	115	
	195 to 300	133	
32	30 to 110	97.5	13
	115 to 190	116.5	
	195 to 300	134	

LEYG□M (Sliding bearing) [mm]

Size	Stroke range	L	DB
25	30 to 55	67.5	12
	60 to 185	100.5	
	190 to 300	138	
32	30 to 50	74	16
	55 to 180	107	
	185 to 300	144	

LEYG□M, LEYG□L Common [mm]

Size	Stroke range	B	C	DA	EB	EH	EV	FA	FB	FC	G	GA	H	J	K	NA	NC
25	30 to 35	136.5	50	20	85	103	52.3	11	14.5	12.5	5.4	40.3	53.3	30.8	29	M5 x 0.8	6.5
	40 to 100		67.5														
	105 to 120	161.5															
	125 to 200		84.5														
	205 to 300		102														
32	30 to 35	156	55	25	101	123	63.8	12	18.5	16.5	5.4	50.3	68.3	38.3	30	M6 x 1.0	8.5
	40 to 100		68														
	105 to 120	186															
	125 to 200		85														
	205 to 300		102														

Size	Stroke range	OA	OB	P	Q	S	T	U	V	WA	WB	WC	X	XA	XB	YD	Z
25	30 to 35	M6 x 1.0	12	80	18	30	95	6.8	40	35	26	70	54	4	5	47	8.5
	40 to 100									50	33.5						
	105 to 120											95					
	125 to 200									70	43.5						
	205 to 300									85	51						
32	30 to 35	M6 x 1.0	12	95	28	40	117	7.3	60	40	28.5	75	64	5	6	60	8.5
	40 to 100									50	33.5						
	105 to 120											105					
	125 to 200									70	43.5						
	205 to 300									85	51						

Size	Stroke range	Incremental encoder [S2/S3]						Absolute encoder [T6/T7]					
		Without lock			With lock			Without lock			With lock		
		A	VB	VC	A	VB	VC	A	VB	VC	A	VB	VC
25	30 to 100	249	87	14.6	285.9	123.9	16.3	244.4	82.4	14.6	285	123	16.3
	105 to 300	274			310.9			269.4			310		
32	30 to 100	274.7	88.2	17.1	303.3	116.8	17.1	263.1	76.6	17.1	299.9	113.4	17.1
	105 to 300	304.7			333.3			293.1			329.9		

Support Block

● Guide for support block application

When the stroke exceeds 100 mm and the mounting orientation is horizontal, the body will be bent. Mounting the support block is recommended. (Please order it separately from the models shown below.)

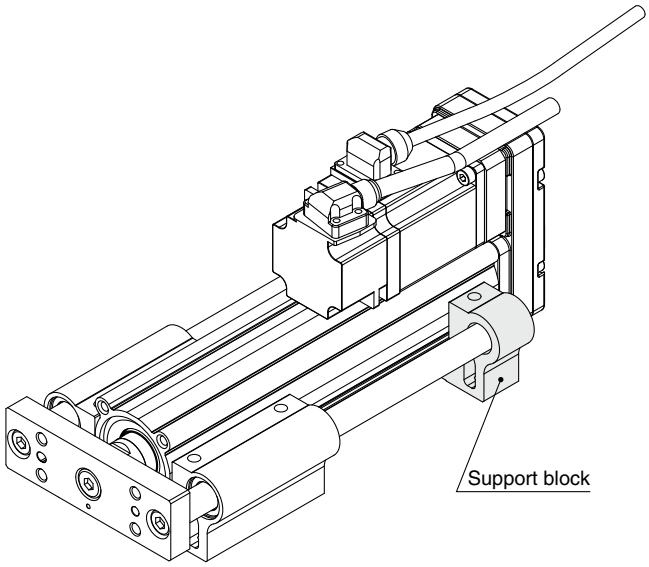

Support Block Model

LEYG-S 025

● **Size**

025	For size 25
032	For size 32

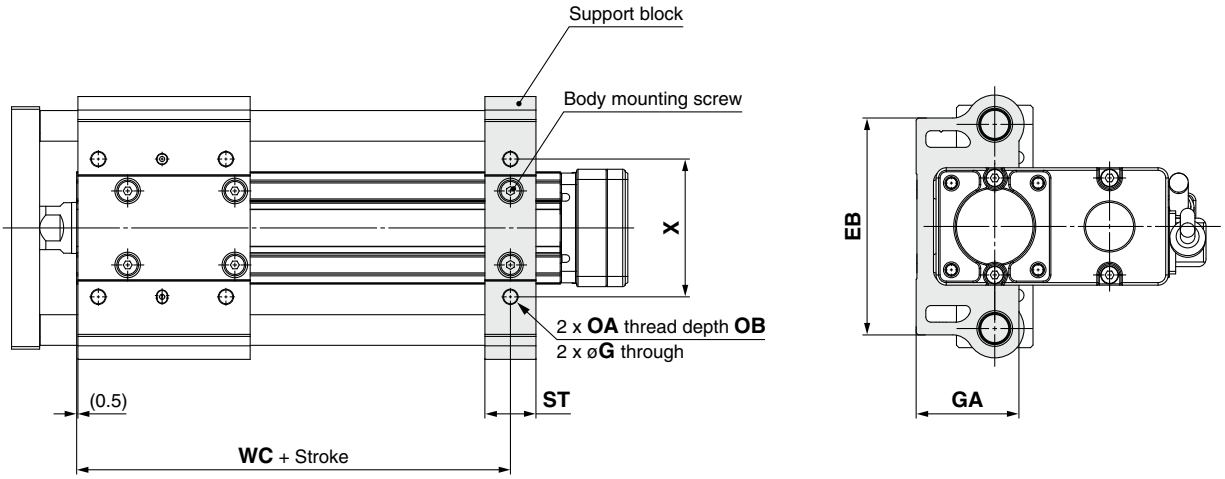

⚠Caution

Do not install the body using only a support block.
The support block should be used only for support.

[mm]

Size	Model	Stroke range	EB	G	GA	OA	OB	ST	WC	X
25	**LEYG-S025**	Up to 100	85	5.4	40.3	M6 x 1.0	12	20	70	54
		105 to 300							95	
32	**LEYG-S032**	Up to 100	101	(5.4)	(50.3)	M6 x 1.0	12	22	75	64
		105 to 300							105	

∗ Two body mounting screws are included with the support block.
∗ The through holes of the LEYG-S032 cannot be used for the top side parallel motor type. Use taps on the bottom.

Guide Rod Type

LEYG Series LEYG25, 32

LECS□ Series ▶p. 559

∗ For details, refer to page 1343 and onward.

How to Order

LEY H G 25 M □ V6 B – 200 □ □ – S 3 M2 □

❶ ❷ ❸ ❹ ❺ ❻ ❼ ❽ ❾ ❿ ⓫ ⓬ ⓭

❶ Accuracy

Nil	Basic type
H	High-precision type

❷ Size

25
32

❸ Bearing type

M	Sliding bearing
L	Ball bushing bearing

❹ Motor mounting position

Nil	Top side parallel
D	In-line

❺ Motor type

Symbol	Type	Output [W]	❷ Size	⓬ Driver type	Compatible drivers
V6∗1	AC servo motor (Absolute encoder)	100	25	M2	LECYM2-V5
				U2	LECYU2-V5
V7		200	32	M2	LECYM2-V7
				U2	LECYU2-V7

∗1 For motor type V6, the compatible driver part number suffix is V5.

❻ Lead [mm]

Symbol	LEYG25	LEYG32∗1
A	12	16 (20)
B	6	8 (10)
C	3	4 (5)

∗1 The values shown in ( ) are the leads for the top side parallel motor type. (Equivalent leads which include the pulley ratio [1.25:1])

❼ Stroke [mm]

30	30
to	to
300	300

∗ For details, refer to the applicable stroke table below.
∗ There is a limit for mounting the size 32 top side parallel motor type and strokes of 50 mm or less. Refer to the dimensions.

❽ Motor option

Nil	Without option
B	With lock

∗ When "With lock" is selected for the top side parallel motor type, the motor body will stick out from the end of the body for size 25 with strokes of 30 mm or less. Check for interference with workpieces before selecting a model.

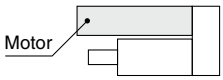

❾ Guide option

Nil	Without option
F	With grease retaining function

∗ Only available for the sliding bearing

❿ Cable type∗1

Nil	Without cable
S	Standard cable
R	Robotic cable

∗1 A motor cable and encoder cable are included with the product.
The motor cable for lock option is included when the motor with lock option is selected.

⓫ Cable length [m]∗1

Nil	Without cable
3	3
5	5
A	10
C	20

∗1 The length of the motor and encoder cables are the same. (For with lock)

Applicable Stroke Table

●: Standard

Model \ Stroke [mm]	30	50	100	150	200	250	300	Manufacturable stroke range
LEYG25	●	●	●	●	●	●	●	15 to 300
LEYG32	●	●	●	●	●	●	●	20 to 300

∗ Please contact SMC for non-standard strokes as they are produced as special orders.

For auto switches, refer to pages 503 to 505.

Motor mounting position: Parallel

Motor mounting position: In-line

⓬ Driver type

	Compatible drivers	Power supply voltage [V]
Nil	Without driver	—
M2	LECYM2-V□	200 to 230
U2	LECYU2-V□	200 to 230

∗ When a driver type is selected, a cable is included. Select the cable type and cable length.

⓭ I/O cable length [m]∗1

Nil	Without cable
H	Without cable (Connector only)
1	1.5

∗1 When "Nil: Without driver" is selected for the driver type, only "Nil: Without cable" can be selected. Refer to page 1135 if an I/O cable is required. (Options are shown on page 1135.)

Use of auto switches for the guide rod type LEYG series
· Auto switches must be inserted from the front side with the rod (plate) sticking out.
· Auto switches cannot be fixed with the parts hidden behind the guide attachment (the side of the rod that sticks out).
· Please contact SMC when using auto switches on the side of the rod that sticks out, as it is produced as a special order.

Compatible Drivers

Driver type	MECHATROLINK-Ⅱ type	MECHATROLINK-Ⅲ type
Series	**LECYM**	**LECYU**
Applicable network	MECHATROLINK-Ⅱ	MECHATROLINK-Ⅲ
Control encoder	Absolute 20-bit encoder	
Communication device	USB communication, RS-422 communication	
Power supply voltage [V]	200 to 230 VAC (50/60 Hz)	
Reference page	1128	

Specifications

	Model		LEYG25$^{M}_{L}$V6 (Parallel) LEYG25$^{M}_{L}$DV6 (In-line)			LEYG32$^{M}_{L}$V7 (Parallel)			LEYG32$^{M}_{L}$DV7 (In-line)		
Actuator specifications	Work load [kg]	Horizontal*1	18	50	50	30	60	60	30	60	60
		Vertical	7	15	29	7	17	35	10	22	44
	Force [N]*2 (Set value: 45 to 90%)		65 to 131	127 to 255	242 to 485	79 to 157	154 to 308	294 to 588	98 to 197	192 to 385	368 to 736
	Max. speed [mm/s]		900	450	225	1200	600	300	1000	500	250
	Pushing speed [mm/s]*3		35 or less			30 or less			30 or less		
	Max. acceleration/deceleration [mm/s²]		5000			5000					
	Positioning repeatability [mm]	Basic type	±0.02			±0.02					
		High-precision type	±0.01			±0.01					
	Lost motion [mm]	Basic type	0.1 or less			0.1 or less					
		High-precision type	0.05 or less			0.05 or less					
	Lead [mm] (including pulley ratio)		12	6	3	20	10	5	16	8	4
	Impact/Vibration resistance [m/s²]*4		50/20			50/20					
	Actuation type		Ball screw + Belt [1:1]/Ball screw			Ball screw + Belt [1:1.25]			Ball screw		
	Guide type		Sliding bearing (LEYG□M), Ball bushing bearing (LEYG□L)								
	Operating temperature range [°C]		5 to 40			5 to 40					
	Operating humidity range [%RH]		90 or less (No condensation)			90 or less (No condensation)					
	Enclosure		IP40								
	Required conditions for the regenerative resistor*5 [kg]	Horizontal	Not required			Not required					
		Vertical	5 or more			2 or more					
Electric specifications	Motor output/Size		100 W/□40			200 W/□60					
	Motor type		AC servo motor (200 VAC)			AC servo motor (200 VAC)					
	Encoder		Absolute 20-bit encoder (Resolution: 1048576 p/rev)								
	Power [W]*6		Max. power 445			Max. power 724			Max. power 724		
Lock unit specifications	Type*7		Non-magnetizing lock			Non-magnetizing lock					
	Holding force [N]		131	255	485	157	308	588	197	385	736
	Power at 20°C [W]		5.5			6			6		
	Rated voltage [V]		24 VDC $^{+10\%}_{0}$								

*1 This is the max. value of the horizontal work load. An external guide is necessary to support the load (Friction coefficient of guide: 0.1 or less). The actual work load changes according to the condition of the external guide. Confirm the load using the actual device.
*2 The force setting range (set values for the driver) for the force control with the torque control mode
Set it while referencing the "Force Conversion Graph" on page 530.
*3 The allowable collision speed for collision with the workpiece with the torque control mode
*4 Impact resistance: No malfunction occurred when the actuator was tested with a drop tester in both an axial direction and a perpendicular direction to the lead screw. (The test was performed with the actuator in the initial state.)
Vibration resistance: No malfunction occurred in a test ranging between 45 to 2000 Hz. The test was performed in both an axial direction and a perpendicular direction to the lead screw. (The test was performed with the actuator in the initial state.)
*5 The work load conditions which require the regenerative resistor when operating at the max. speed (Duty ratio: 100%).
Order the regenerative resistor separately. For details, refer to the "Required Conditions for the Regenerative Resistor (Guide)" on page 529.
*6 Indicates the max. power during operation (including the driver)
When selecting the power supply capacity, refer to the power supply capacity in the operation manual of each driver.
*7 Only when motor option "With lock" is selected

Weight

Product Weight: Top Side Parallel Motor Type

[kg]

Series	LEYG25MV6							LEYG32MV7						
Stroke [mm]	30	50	100	150	200	250	300	30	50	100	150	200	250	300
Weight [kg]	1.7	1.9	2.2	2.6	3.0	3.3	3.6	3.1	3.4	4.0	4.7	5.3	5.7	6.2

Series	LEYG25LV6							LEYG32LV7						
Stroke [mm]	30	50	100	150	200	250	300	30	50	100	150	200	250	300
Weight [kg]	1.7	1.9	2.2	2.6	2.9	3.2	3.4	3.1	3.4	3.8	4.5	5.0	5.5	5.9

Product Weight: In-line Motor Type

[kg]

Series	LEYG25MDV6							LEYG32MDV7						
Stroke [mm]	30	50	100	150	200	250	300	30	50	100	150	200	250	300
Weight [kg]	1.7	1.9	2.2	2.6	3.0	3.3	3.6	3.2	3.4	4.0	4.7	5.3	5.8	6.2

Series	LEYG25LDV6							LEYG32LDV7						
Stroke [mm]	30	50	100	150	200	250	300	30	50	100	150	200	250	300
Weight [kg]	1.7	2.0	2.2	2.6	2.9	3.2	3.4	3.2	3.4	3.8	4.6	5.0	5.5	5.9

Additional Weight

[kg]

Size	25	32
Lock	0.3	0.6

Construction

Motor mounting position: Top side parallel motor type

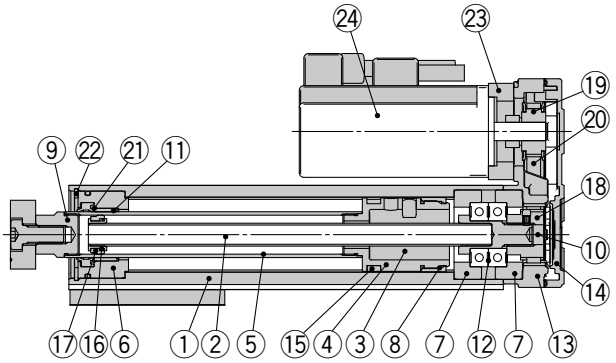

Motor mounting position: In-line type

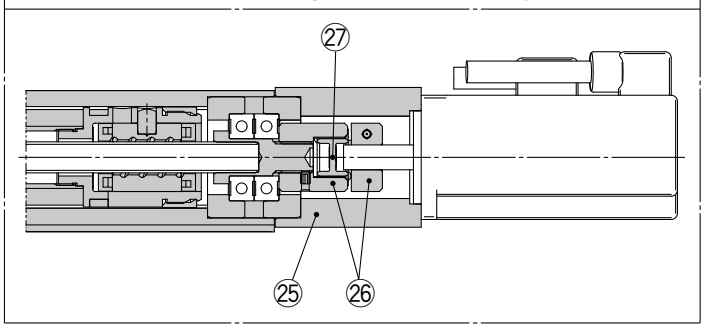

LEYG□M

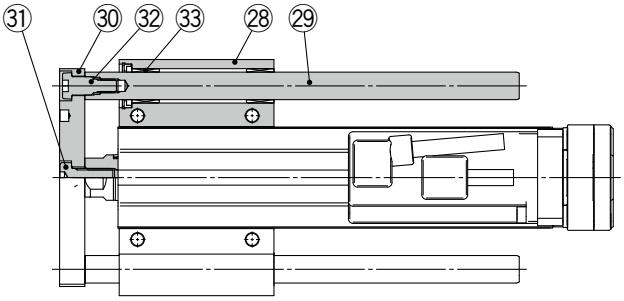

LEYG□L

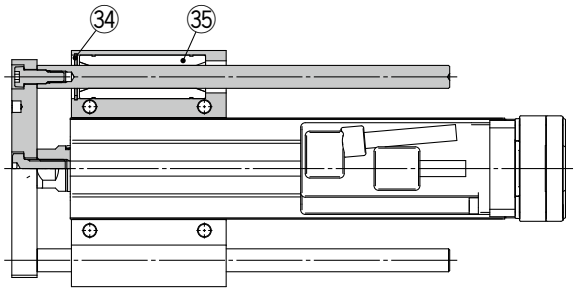

Component Parts

No.	Description	Material	Note
1	**Body**	Aluminum alloy	Anodized
2	**Ball screw shaft**	Alloy steel	
3	**Ball screw nut**	—	
4	**Piston**	Aluminum alloy	
5	**Piston rod**	Stainless steel	Hard chrome plating
6	**Rod cover**	Aluminum alloy	
7	**Bearing holder**	Aluminum alloy	
8	**Rotation stopper**	Synthetic resin	
9	**Socket**	Free cutting carbon steel	Nickel plating
10	**Connected shaft**	Free cutting carbon steel	Nickel plating
11	**Bushing**	Bearing alloy	
12	**Bearing**	—	
13	**Return box**	Aluminum die-cast	Coating
14	**Return plate**	Aluminum die-cast	Coating
15	**Magnet**	—	
16	**Wear ring holder**	Stainless steel	Stroke 101 mm or more
17	**Wear ring**	Synthetic resin	Stroke 101 mm or more
18	**Screw shaft pulley**	Aluminum alloy	

No.	Description	Material	Note
19	**Motor pulley**	Aluminum alloy	
20	**Belt**	—	
21	**Seal**	NBR	
22	**Retaining ring**	Steel for spring	Phosphate coating
23	**Motor adapter**	Aluminum alloy	Coating
24	**Motor**	—	
25	**Motor block**	Aluminum alloy	Coating
26	**Hub**	Aluminum alloy	
27	**Spider**	Urethane	Spider
28	**Guide attachment**	Aluminum alloy	Anodized
29	**Guide rod**	Carbon steel	
30	**Plate**	Aluminum alloy	Anodized
31	**Plate mounting cap screw**	Carbon steel	Nickel plating
32	**Guide cap screw**	Carbon steel	Nickel plating
33	**Sliding bearing**	Bearing alloy	
34	**Retaining ring**	Steel for spring	Phosphate coating
35	**Ball bushing**	—	

Support Block

Size	Order no.
25	LEYG-S025
32	LEYG-S032

∗ Two body mounting screws are included with the support block.

Replacement Parts/Belt

Size	Order no.
25	LE-D-2-2
32	LE-D-2-4

Replacement Parts/Grease Pack

Applied portion	Order no.
Piston rod	GR-S-010 (10 g)
Guide rod	GR-S-020 (20 g)

Dimensions: Top Side Parallel Motor

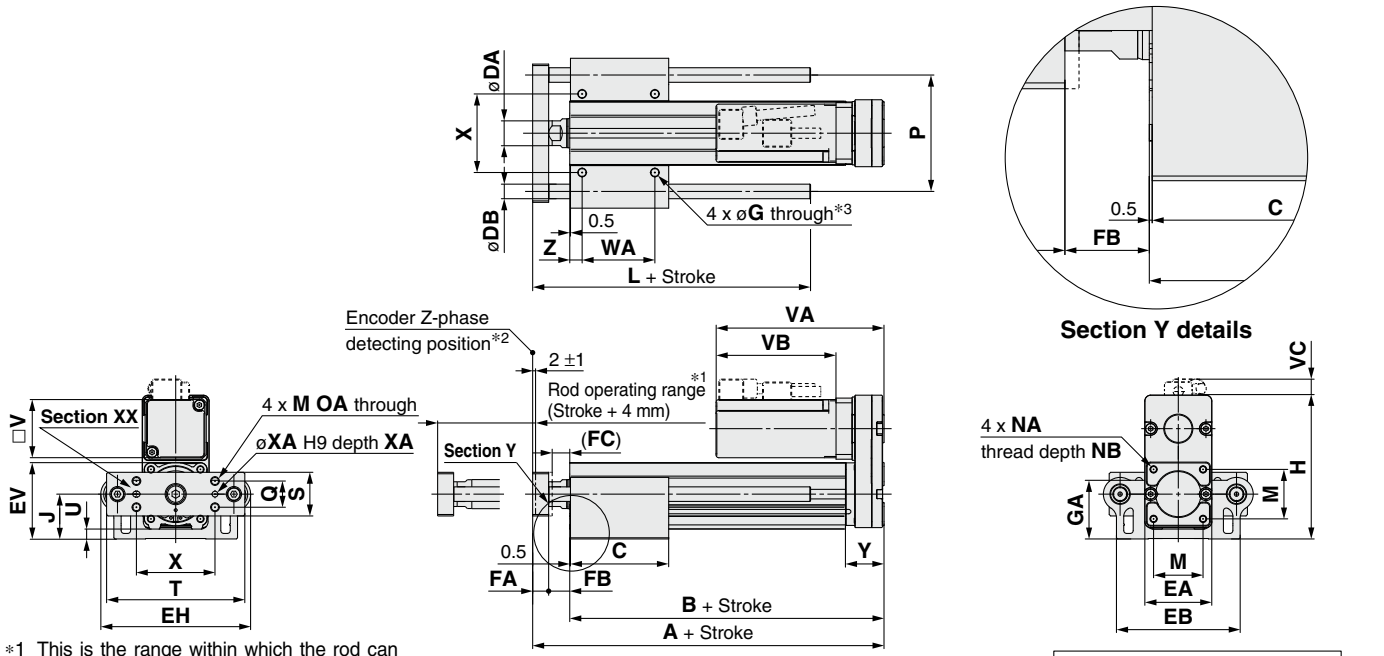

*1 This is the range within which the rod can move. Make sure that workpieces mounted on the rod do not interfere with other workpieces or the facilities around the rod.
*2 The Z-phase first detecting position from the stroke end of the motor side
*3 Through holes cannot be used for size 32 with strokes of 50 mm or less.

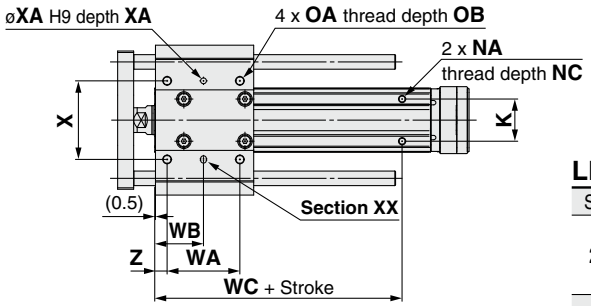

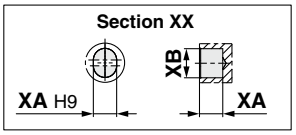

LEYG□L (Ball bushing bearing) [mm]

Size	Stroke range	L	DB
25	30 to 110	91	10
	115 to 190	115	
	195 to 300	133	
32	30 to 110	97.5	13
	115 to 190	116.5	
	195 to 300	134	

LEYG□M (Sliding bearing) [mm]

Size	Stroke range	L	DB
25	30 to 55	67.5	12
	60 to 185	100.5	
	190 to 300	138	
32	30 to 50	74	16
	55 to 180	107	
	185 to 300	144	

LEYG□M, LEYG□L Common [mm]

Size	Stroke range	A	B	C	DA	EA	EB	EH	EV	FA	FB	FC	G	GA	H	J	K	M	NA	NB	NC
25	30 to 35	141.5	116	50	20	46	85	103	52.3	11	14.5	12.5	5.4	40.3	98.8	30.8	29	34	M5 x 0.8	8	6.5
	40 to 100			67.5																	
	105 to 120	166.5	141																		
	125 to 200			84.5																	
	205 to 300			102																	
32	30 to 35	160.5	130	55	25	60	101	123	63.8	12	18.5	16.5	5.4	50.3	125.3	38.3	30	40	M6 x 1.0	10	8.5
	40 to 100			68																	
	105 to 120	190.5	160																		
	125 to 200			85																	
	205 to 300			102																	

Size	Stroke range	OA	OB	P	Q	S	T	U	V	WA	WB	WC	X	XA	XB	Y	Z
25	30 to 35	M6 x 1.0	12	80	18	30	95	6.8	40	35	26	70	54	4	5	26.5	8.5
	40 to 100									50	33.5						
	105 to 120											95					
	125 to 200									70	43.5						
	205 to 300									85	51						
32	30 to 35	M6 x 1.0	12	95	28	40	117	7.3	60	40	28.5	75	64	5	6	34	8.5
	40 to 100									50	33.5						
	105 to 120											105					
	125 to 200									70	43.5						
	205 to 300									85	51						

Size	Without lock			With lock		
	VA	VB	VC	VA	VB	VC
25	115.5	82.5	11	160.5	127.5	11
32	120	80	14	160	120	14

Dimensions: In-line Motor

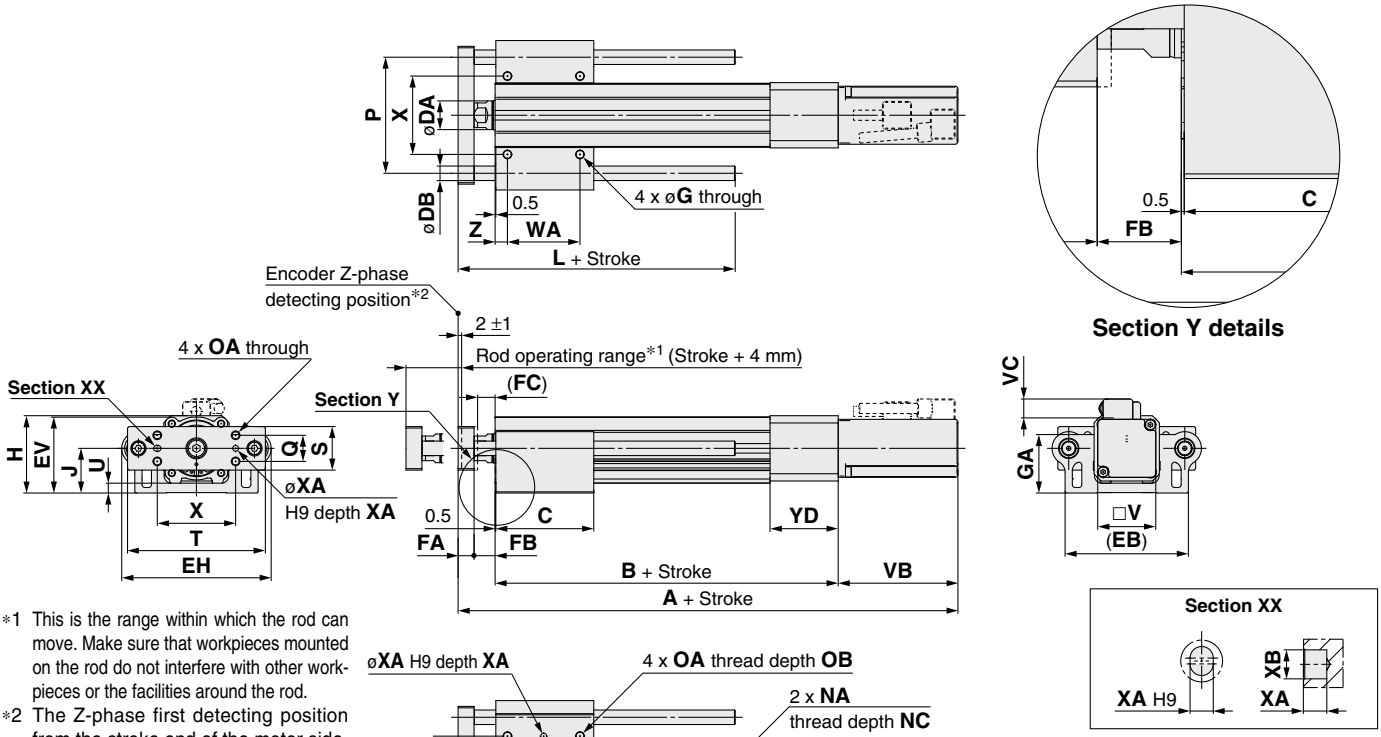

*1 This is the range within which the rod can move. Make sure that workpieces mounted on the rod do not interfere with other workpieces or the facilities around the rod.
*2 The Z-phase first detecting position from the stroke end of the motor side

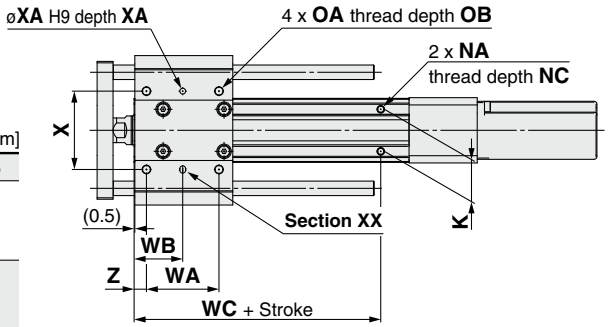

LEYG□L (Ball bushing bearing) [mm]

Size	Stroke range	L	DB
25	30 to 110	91	10
	115 to 190	115	
	195 to 300	133	
32	30 to 110	97.5	13
	115 to 190	116.5	
	195 to 300	134	

LEYG□M (Sliding bearing) [mm]

Size	Stroke range	L	DB
25	30 to 55	67.5	12
	60 to 185	100.5	
	190 to 300	138	
32	30 to 50	74	16
	55 to 180	107	
	185 to 300	144	

LEYG□M, LEYG□L Common [mm]

Size	Stroke range	B	C	DA	EB	EH	EV	FA	FB	FC	G	GA	H	J	K	NA	NC
25	30 to 35	136.5	50	20	85	103	52.3	11	14.5	12.5	5.4	40.3	53.3	30.8	29	M5 x 0.8	6.5
	40 to 100		67.5														
	105 to 120	161.5															
	125 to 200		84.5														
	205 to 300		102														
32	30 to 35	156	55	25	101	123	63.8	12	18.5	16.5	5.4	50.3	68.3	38.3	30	M6 x 1.0	8.5
	40 to 100		68														
	105 to 120	186															
	125 to 200		85														
	205 to 300		102														

Size	Stroke range	OA	OB	P	Q	S	T	U	V	WA	WB	WC	X	XA	XB	YD	Z
25	30 to 35	M6 x 1.0	12	80	18	30	95	6.8	40	35	26	70	54	4	5	47	8.5
	40 to 100									50	33.5						
	105 to 120											95					
	125 to 200									70	43.5						
	205 to 300									85	51						
32	30 to 35	M6 x 1.0	12	95	28	40	117	7.3	60	40	28.5	75	64	5	6	60	8.5
	40 to 100									50	33.5						
	105 to 120											105					
	125 to 200									70	43.5						
	205 to 300									85	51						

Size	Stroke range	Without lock			With lock		
		A	VB	VC	A	VB	VC
25	30 to 100	255.5	82.5	11.5	300.5	127.5	11.5
	105 to 300	280.5			325.5		
32	30 to 100	266.5	80	14	306.5	120	14
	105 to 300	296.5			336.5		

Support Block

● Guide for support block application

When the stroke exceeds 100 mm and the mounting orientation is horizontal, the body will be bent. Mounting the support block is recommended. (Please order it separately from the models shown below.)

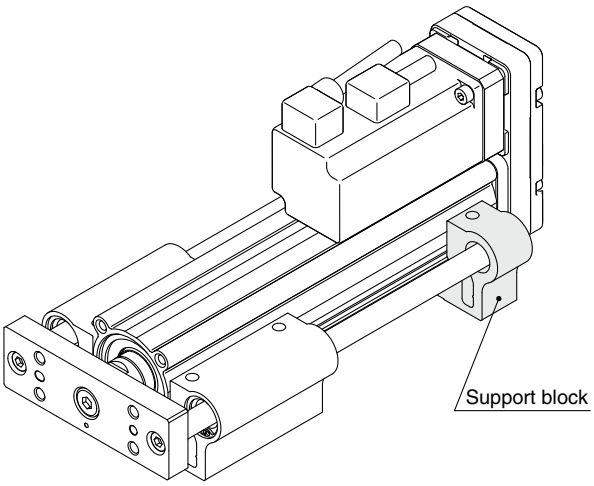

Support Block Model

LEYG-S 025

● **Size**

025	For size 25
032	For size 32

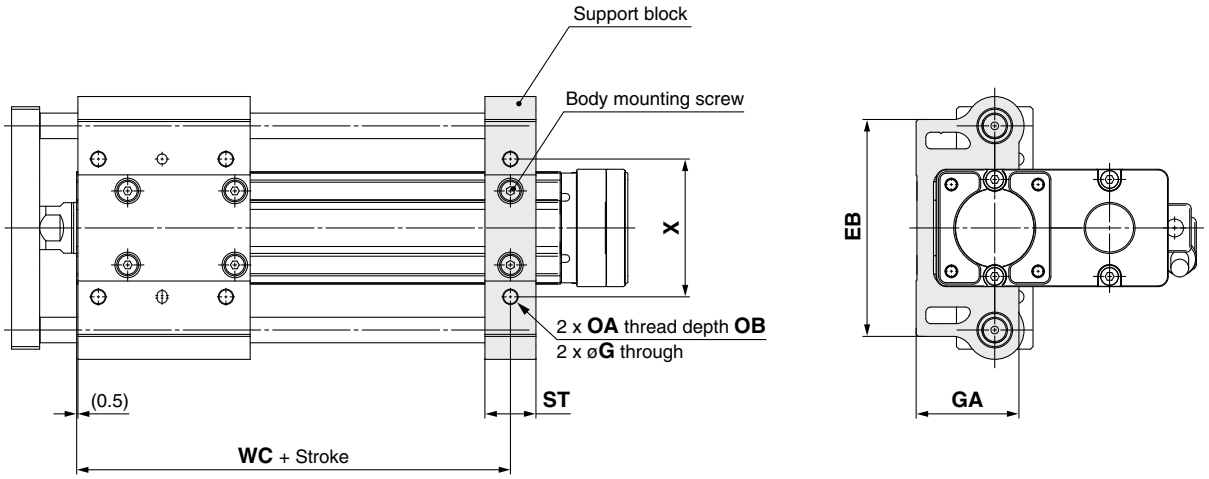

⚠ Caution

Do not install the body using only a support block.
The support block should be used only for support.

[mm]

Size	Model	Stroke range	EB	G	GA	OA	OB	ST	WC	X
25	**LEYG-S025**	30 to 100	85	5.4	40.3	M6 x 1.0	12	20	70	54
		105 to 300							95	
32	**LEYG-S032**	30 to 100	101	5.4	50.3	M6 x 1.0	12	22	75	64
		105 to 300							105	

∗ Two body mounting screws are included with the support block.
∗ The through holes of the LEYG-S032 cannot be used for the top side parallel motor type. Use taps on the bottom.

LEY/LEYG Series
Specific Product Precautions 1

Be sure to read this before handling the products. Refer to page 1351 for safety instructions, pages 1352 to 1357 for electric actuator precautions, and pages 1358 to 1367 for auto switch precautions.

Design / Selection

⚠Warning

1. Do not apply a load in excess of the specification limits.

Select a suitable actuator by work load and allowable lateral load on the rod end. If a load in excess of the specification limits is applied to the piston rod, the generation of play in the piston rod sliding parts, reduced accuracy, etc., may occur and adversely affect the operation and service life of the product.

2. Do not use the product in applications where excessive external force or impact force is applied to it.

Failure to do so may result in a malfunction.

3. When used as a stopper, select the LEYG series "Sliding bearing" for strokes of 30 mm or less.

4. When used as a stopper, fix the main body with a guide attachment ("Top mounting" or "Bottom mounting").

If the end of the actuator is used to fix the main body (end mounting), the excessive load acts on the actuator, which may adversely affect the operation and service life of the product.

Handling

⚠Caution

1. INP output signal

1) Positioning operation
When the product comes within the set range of the step data [In position], the INP output signal will turn ON.
Initial value: Set to [0.50] or higher.

2) Pushing operation
When the effective force exceeds the step data [Trigger LV], the INP output signal will turn ON.
Use the product within the specified range of the [Pushing force] and [Trigger LV].
a) To ensure that the actuator pushes the workpieces with the set [Pushing force], it is recommended that the [Trigger LV] be set to the same value as the [Pushing force].
b) When the [Pushing force] and the [Trigger LV] are set below the specified range, the INP output signal will turn ON from the pushing start position.

<Limit Values for Pushing Force and Trigger Level in Relation to Pushing Speed>
Without Load

Model	Lead	Pushing speed [mm/s]	Pushing force (Setting input value)
LEY16□E	A/B/C	21 to 50	45 to 65%
LEY25□E	A/B/C	21 to 35	40 to 50%
LEY32□E	A	24 to 30	50 to 70%
	B/C	21 to 30	
LEY40□E	A	24 to 30	50 to 65%
	B/C	21 to 30	

Handling

⚠Caution

<Limit Values for Pushing Force and Trigger Level in Relation to Pushing Speed>
Without Load

Model	Lead	Pushing speed [mm/s]	Pushing force (Setting input value)
LEY16□	A/B/C	21 to 50	60 to 85%
LEY25□	A/B/C	21 to 35	50 to 65%
LEY32□	A	24 to 30	60 to 85%
	B/C	21 to 30	
LEY40□	A	24 to 30	50 to 65%
	B/C	21 to 30	

Model	Lead	Pushing speed [mm/s]	Pushing force (Setting input value)
LEY16□A	A/B/C	21 to 50	80 to 95%
LEY25□A	A/B/C	21 to 35	80 to 95%

There is a limit to the pushing force in relation to the pushing speed. If the product is operated outside of the range (low pushing force), the completion signal [INP] may be output before the pushing operation has been completed (during the moving operation).
If operating with the pushing speed below the min. speed, please check for operating problems before using the product.

<Set Values for Vertical Upward Transfer Pushing Operations>

For vertical loads (upward), set the pushing force to the max. value shown below and operate at the work load or less.

Model	LEY16□E			LEY25□E			LEY32□E			LEY40□E		
Lead	A	B	C	A	B	C	A	B	C	A	B	C
Work load [kg]	1	1.5	3	2.5	5	10	4.5	9	18	7	14	28
Pushing force	65%			50%			70%			65%		

Model	LEY16□			LEY25□			LEY32□			LEY40□		
Lead	A	B	C	A	B	C	A	B	C	A	B	C
Work load [kg]	1	1.5	3	2.5	5	10	4.5	9	18	7	14	28
Pushing force	85%			65%			85%			65%		

Model	LEY16□A			LEY25□A		
Lead	A	B	C	A	B	C
Work load [kg]	1	1.5	3	1.2	2.5	5
Pushing force	95%			95%		

Model	LEYG16$^{M}_{L}$□			LEYG25$^{M}_{L}$□			LEYG32$^{M}_{L}$□			LEYG40$^{M}_{L}$□		
Lead	A	B	C	A	B	C	A	B	C	A	B	C
Work load [kg]	0.5	1	2.5	1.5	4	9	2.5	7	16	5	12	26
Pushing force	85%			65%			85%			65%		

Model	LEYG16$^{M}_{L}$□A			LEYG25$^{M}_{L}$□A		
Lead	A	B	C	A	B	C
Work load [kg]	0.5	1	2.5	0.5	1.5	4
Pushing force	95%			95%		

2. To conduct a pushing operation, be sure to set the product to [Pushing operation].

Also, refrain from bumping the workpiece during a positioning operation or when in the range of the positioning operation. Failure to do so may result in a malfunction.

3. Use the product within the specified pushing speed range for the pushing operation.

Failure to do so may result in damage or malfunction.

4. The moving force should be the initial value (LEY16□/25□/32□/40□: 100%, LEY16A□: 150%, and LEY25A□: 200%).

If the moving force is set below the initial value, it may cause the generation of an alarm.

LEY/LEYG Series
Specific Product Precautions 2

Be sure to read this before handling the products. Refer to page 1351 for safety instructions, pages 1352 to 1357 for electric actuator precautions, and pages 1358 to 1367 for auto switch precautions.

Handling

⚠Caution

5. The actual speed of this actuator is affected by the load.

Check the model selection section of the catalog.

6. Do not apply a load, impact, or resistance in addition to the transferred load during return to origin.

Additional force will cause the displacement of the origin position since it is based on the detected motor torque.

7. For pushing operations, set the product to a position at least 2 mm away from a workpiece. (This position is referred to as the pushing start position.)

The following alarms may be generated and operation may become unstable if setting is not done correctly.

a. "Posn failed"

The product cannot reach the pushing start position due to variations in the target positions.

b. "Pushing ALM"

The product is pushed back from the pushing start position after starting to push.

8. Do not scratch or dent the sliding parts of the piston rod by bumping them or placing objects on them.

The piston rod and guide rod are manufactured to precise tolerances, so even a slight deformation may result in a malfunction.

9. When an external guide is used, connect it in such a way that no impact or load is applied to it.

Use a freely moving connector (such as a floating joint).

10. Do not operate by fixing the piston rod and moving the actuator body.

Excessive load will be applied to the piston rod, resulting in damage to the actuator and a reduced service life of the product.

11. When an actuator is operated with one end fixed and the other free (ends tapped or flange), a bending moment may act on the actuator due to vibration generated at the stroke end, which can damage the actuator. In such cases, install a mounting bracket to suppress the vibration of the actuator body or reduce the speed so that the actuator does not vibrate at the stroke end.

Also, use a mounting bracket when moving the actuator body or when a long stroke actuator is mounted horizontally and fixed at one end.

12. Avoid using the electric actuator in such a way that rotational torque would be applied to the piston rod.

Failure to do so may result in the deformation of the non-rotating guide, abnormal auto switch responses, play in the internal guide, or an increase in the sliding resistance.

Refer to the table below for the approximate values of the allowable range of rotational torque.

Allowable rotational torque [N·m] or less	LEY16□□	LEY25□□	LEY32/40□□	LEY63	LEY100
	0.8	1.1	1.4	2.8	4.6

When screwing a bracket or nut into the piston rod end, hold the flats of the end of the "socket" with a wrench (the piston rod should be fully retracted). Do not apply tightening torque to the non-rotating mechanism.

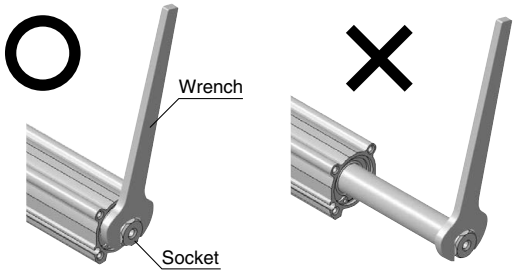

13. When rotational torque is applied to the end of the plate, use it within the allowable range. [LEYG series]

Failure to do so may result in the deformation of the guide rod and bushing, play in the guide, or an increase in the sliding resistance.

14. For pushing operations, use the product within the duty ratio range below.

The duty ratio is a ratio of the operation time in one cycle.

• Battery-less absolute (Step motor 24 VDC)

LEY16□E

Ambient temperature	Pushing force set value [%]	Duty ratio [%]	Continuous pushing time [min]
30°C or less	65 or less	100	No restriction
40°C	40 or less	100	No restriction
	50	30	45 or less
	60	18	15 or less
	65	15	10 or less

LEY25□E

Ambient temperature	Pushing force set value [%]	Duty ratio [%]	Continuous pushing time [min]
40°C or less	50 or less	100	No restriction

LEY32□E

Ambient temperature	Pushing force set value [%]	Duty ratio [%]	Continuous pushing time [min]
40°C or less	70 or less	100	No restriction

LEY40□E

Ambient temperature	Pushing force set value [%]	Duty ratio [%]	Continuous pushing time [min]
40°C or less	65 or less	100	No restriction

LEY/LEYG Series
Specific Product Precautions 3

Be sure to read this before handling the products. Refer to page 1351 for safety instructions, pages 1352 to 1357 for electric actuator precautions, and pages 1358 to 1367 for auto switch precautions.

Handling

⚠Caution

• Incremental (Step motor 24 VDC)

LEY16□

Pushing force [%]	Ambient temperature: 25°C or less		Ambient temperature: 40°C	
	Duty ratio [%]	Continuous pushing time [min]	Duty ratio [%]	Continuous pushing time [min]
40 or less	100	—	100	No restriction
50			70	12 or less
70			20	1.3 or less
85			15	0.8 or less

LEY25□/40

Pushing force [%]	Ambient temperature: 25°C or less		Ambient temperature: 40°C	
	Duty ratio [%]	Continuous pushing time [min]	Duty ratio [%]	Continuous pushing time [min]
65 or less	100	—	100	No restriction

LEY32□

Pushing force [%]	Ambient temperature: 25°C or less		Ambient temperature: 40°C	
	Duty ratio [%]	Continuous pushing time [min]	Duty ratio [%]	Continuous pushing time [min]
65 or less	100	—	100	No restriction
85			50	15 or less

• Incremental (Servo motor 24 VDC)

LEY16A□

Pushing force [%]	Ambient temperature: 25°C or less		Ambient temperature: 40°C	
	Duty ratio [%]	Continuous pushing time [min]	Duty ratio [%]	Continuous pushing time [min]
95 or less	100	—	100	No restriction

LEY25A□

Pushing force [%]	Ambient temperature: 25°C or less		Ambient temperature: 40°C	
	Duty ratio [%]	Continuous pushing time [min]	Duty ratio [%]	Continuous pushing time [min]
95 or less	100	—	100	No restriction

15. When mounting the product, secure a space of 40 mm or more to allow for bends in the cable.

∗ Failure to do so may result in cable breakage.

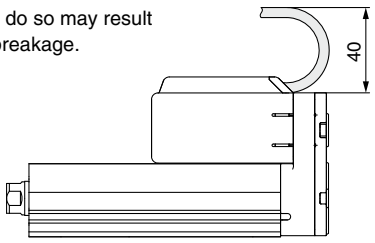

16. When mounting a bolt, workpiece, or attachment, hold the flats of the piston rod end with a wrench so that the piston rod does not rotate. The bolt should be tightened within the specified torque range.

Failure to do so may result in abnormal auto switch responses, play in the internal guide, or an increase in the sliding resistance.

17. When mounting the product and/or a workpiece, tighten the mounting screws within the specified torque range.

Tightening the screws with a higher torque than recommended may result in a malfunction, while tightening with a lower torque can result in the displacement of the mounting position or, in extreme conditions, the actuator could become detached from its mounting position.

<LEY series>

Workpiece fixed/Rod end female thread

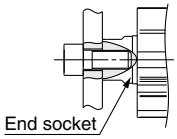

Model	Screw size	Max. tightening torque [N·m]	Max. screw-in depth [mm]	End socket width across flats [mm]
LEY16	M5 x 0.8	3.0	10	14
LEY25	M8 x 1.25	12.5	13	17
LEY32/40	M8 x 1.25	12.5	13	22
LEY63	M16 x 2	106	21	36
LEY100	M20 x 2.5	204	27	27

Workpiece fixed/Rod end male thread (When "Rod end male thread" is selected)

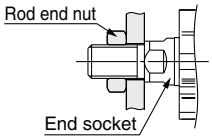

Model	Thread size	Max. tightening torque [N·m]	Effective thread length [mm]	End socket width across flats [mm]
LEY16	M8 x 1.25	12.5	12	14
LEY25	M14 x 1.5	65.0	20.5	17
LEY32/40	M14 x 1.5	65.0	20.5	22
LEY63	M18 x 1.5	97.0	26	36

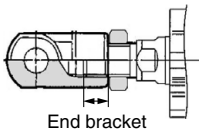

Model	Rod end nut		End bracket screw-in depth [mm]
	Width across flats [mm]	Length [mm]	
LEY16	13	5	5 or more
LEY25	22	8	8 or more
LEY32/40	22	8	8 or more
LEY63	27	11	18

∗ The rod end nut is an accessary.

Body fixed/Body bottom tapped type (When "Body bottom tapped" is selected)

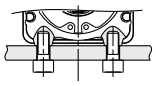

Model	Screw size	Max. tightening torque [N·m]	Max. screw-in depth [mm]
LEY16	M4 x 0.7	1.5	5.5
LEY25	M5 x 0.8	3.0	6.5
LEY32/40	M6 x 1.0	5.2	8.8
LEY63	M8 x 1.25	12.5	10
LEY100	M10 x 1.5	24.5	17

Body fixed/Rod side/Head side tapped type

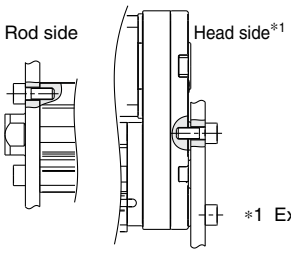

Model	Screw size	Max. tightening torque [N·m]	Max. screw-in depth [mm]
LEY16	M4 x 0.7	1.5	7
LEY25	M5 x 0.8	3.0	8
LEY32/40	M6 x 1.0	5.2	10
LEY63	M8 x 1.25	12.5	16

∗1 Excludes the LEY□D

<LEYG series>

Workpiece fixed/Plate tapped type

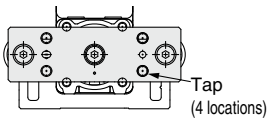

Model	Screw size	Max. tightening torque [N·m]	Max. screw-in depth [mm]
LEYG16$^{M}_{L}$	M5 x 0.8	3.0	8
LEYG25$^{M}_{L}$	M6 x 1.0	5.2	11
LEYG$^{32M}_{40L}$	M6 x 1.0	5.2	12

LEY/LEYG Series
Specific Product Precautions 4

Be sure to read this before handling the products. Refer to page 1351 for safety instructions, pages 1352 to 1357 for electric actuator precautions, and pages 1358 to 1367 for auto switch precautions.

Handling

⚠Caution

Body fixed/Top mounting

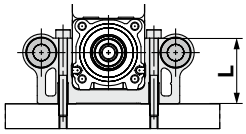

Model	Screw size	Max. tightening torque [N·m]	Length: L [mm]
LEYG16$^{M}_{L}$	M4 x 0.7	1.5	32
LEYG25$^{M}_{L}$	M5 x 0.8	3.0	40.3
LEYG$^{32M}_{40L}$	M5 x 0.8	3.0	50.3

Body fixed/Bottom mounting

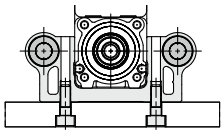

Model	Screw size	Max. tightening torque [N·m]	Max. screw-in depth [mm]
LEYG16$^{M}_{L}$	M5 x 0.8	3.0	10
LEYG25$^{M}_{L}$	M6 x 1.0	5.2	12
LEYG$^{32M}_{40L}$	M6 x 1.0	5.2	12

Body fixed/Head side tapped type

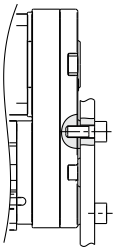

Model	Screw size	Max. tightening torque [N·m]	Max. screw-in depth [mm]
LEYG16$^{M}_{L}$	M4 x 0.7	1.5	7
LEYG25$^{M}_{L}$	M5 x 0.8	3.0	8
LEYG$^{32M}_{40L}$	M6 x 1.0	5.2	10

18. Keep the flatness of the mounting surface within the following ranges when mounting the actuator body and workpiece.

Mounting the product on an uneven workpiece or base may result in an increase in the sliding resistance.

Model	Mounting position	Flatness
LEY□	Body/Body bottom 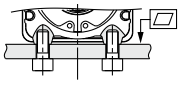	0.1 mm or less
LEYG□	Top mounting/Bottom mounting 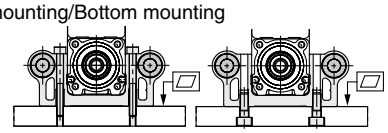	0.02 mm or less
	Workpiece/Plate mounting 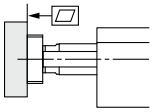	0.02 mm or less

19. When using auto switches with the guide rod type LEYG series, the following limits apply. Please consider the following before selecting the product.

- Auto switches must be inserted from the front side with the rod (plate) sticking out.
- Auto switches with perpendicular electrical entries cannot be used.
- Auto switches cannot be fixed with the parts hidden behind the guide attachment (the side of the rod that sticks out).
- Please contact SMC when using auto switches on the side of the rod that sticks out.

Handling

⚠Caution

20. When using the product with the IP65 or equivalent specifications, be sure to mount the tubing to the vent hole, and then place the end of the tubing in an area where it is not exposed to dust or water. When the actuator is used without mounting the fitting and tubing to the vent hole, water or dust may enter the inside of the actuator, resulting in a malfunction.

21. When fluctuations in the load are caused during operation, malfunction, noise, or alarm generation may occur. (In the case of the AC servo motor)

The gain tuning may not be suitable for fluctuating loads.

Adjust the gain properly by following the instructions in the driver manual.

Enclosure

IP – □□

First digit **Second digit**

- **First Digit: Degree of protection against solid foreign objects**

0	Not protected
1	Protected against solid foreign objects of 50 mmø and larger
2	Protected against solid foreign objects of 12 mmø and larger
3	Protected against solid foreign objects of 2.5 mmø and larger
4	Protected against solid foreign objects of 1.0 mmø and larger
5	Dust protected
6	Dust-tight

- **Second Digit: Degree of protection against water**

0	Not protected	—
1	Protected against vertically falling water droplets	Dripproof type 1
2	Protected against vertically falling water droplets when enclosure is tilted up to 15°	Dripproof type 2
3	Protected against rainfall when enclosure is tilted up to 60°	Rainproof type
4	Protected against splashing water	Splashproof type
5	Protected against water jets	Water-jet-proof type
6	Protected against powerful water jets	Powerful water-jet-proof type
7	Protected against the effects of temporary immersion in water	Immersible type
8	Protected against the effects of continuous immersion in water	Submersible type

Example) Degrees of protection

Degrees of protection			Details
IP65	Solid foreign objects	Dust-tight	Dust particles are prevented from entering the device.
	Entry of water	Water-jet-proof*1	The direct application of water jets to the device from any direction will not cause any damage.
IP67	Solid foreign objects	Dust-tight	Dust particles are prevented from entering the device.
	Entry of water	Immersible*1	The amount of water that enters the device when the actuator (in the stopped state) is submersed in up to 1 m of water for up to 30 mins will not cause any damage.

*1 Be sure to take appropriate protective measures if the product is to be used in an environment where it will be constantly exposed to water or fluids other than water splash.
In particular, the product cannot be used in environments where oils, such as cutting oil or cutting fluid, are present.

LEY/LEYG Series
Specific Product Precautions 5

Be sure to read this before handling the products. Refer to page 1351 for safety instructions, pages 1352 to 1357 for electric actuator precautions, and pages 1358 to 1367 for auto switch precautions.

Maintenance

⚠ Warning

1. Ensure that the power supply is stopped and the workpiece is removed before starting maintenance work or replacing the product.

- **Maintenance frequency**

  Perform maintenance according to the table below.

Frequency	Appearance check	Belt check
Inspection before daily operation	○	—
Inspection every 6 months/ 250 km/5 million cycles*1	○	○

*1 Select whichever comes first.

- **Items for visual appearance check**

  1. Loose set screws, Abnormal amount of dirt, etc.
  2. Check for visible damage, Check of cable joint
  3. Vibration, Noise

- **Items for belt check**

  Stop operation immediately and replace the belt when any of the following occur. In addition, ensure your operating environment and conditions satisfy the requirements specified for the product.

  a. Tooth shape canvas is worn out
  Canvas fiber becomes fuzzy, Rubber is coming off and the fiber has become whitish, Lines of fibers have become unclear

  b. Peeling off or wearing of the side of the belt
  Belt corner has become rounded and frayed threads stick out

  c. Belt is partially cut
  Belt is partially cut, Foreign matter caught in the teeth of other parts is causing damage

  d. A vertical line on belt teeth is visible
  Damage which is made when the belt runs on the flange

  e. Rubber back of the belt is softened and sticky

  f. Cracks on the back of the belt are visible

LEY Series / Double Clevis Type Corresponding Stroke (Swinging Angle)

- When using the LEY series / double clevis type exceeding the recommended stroke, check the table below and order a double clevis bracket separately.

○: Available
×: Unavailable

Swinging angle							
Model	Stroke [mm]	0° to 30°	31° to 50°	51° to 60°	61° to 70°	71° to 80°	81° to 90°
LEY16	50	○	○	○	○	○	○
	100	○	○	○	○	○	○
	150	×	×	○	○	○	○
	200	×	×	×	○	○	○
	250	×	×	×	×	○	○
	300	×	×	×	×	×	○
LEY25	50	○	○	○	○	○	○
	100	○	○	○	○	○	○
	150	○	○	○	○	○	○
	200	○	○	○	○	○	○
	250	×	×	○	○	○	○
	300	×	×	○	○	○	○
	350	×	×	×	○	○	○
	400	×	×	×	×	○	○
LEY32 /LEY40	50	○	○	○	○	○	○
	100	○	○	○	○	○	○
	150	○	○	○	○	○	○
	200	○	○	○	○	○	○
	250	×	○	○	○	○	○
	300	×	○	○	○	○	○
	350	×	×	○	○	○	○
	400	×	×	×	○	○	○
	450	×	×	×	○	○	○
	500	×	×	×	×	○	○
LEY63	100	○	○	○	○	○	○
	200	○	○	○	○	○	○
	300	○	○	○	○	○	○
	400	×	×	○	○	○	○
	500	×	×	×	○	○	○
	600	×	×	×	○	○	○
	700	×	×	×	×	○	○
	800	×	×	×	×	○	○
LEY100	100	○	○	○	○	○	○
	200	○	○	○	○	○	○
	300	○	○	○	○	○	○
	400	○	○	○	○	○	○
	500	×	○	○	○	○	○
	600	×	×	○	○	○	○
	700	×	×	×	○	○	○
	800	×	×	×	×	○	○
	900	×	×	×	×	○	○
	1000	×	×	×	×	×	○

Size	Double clevis order no.	Double clevis pivot bracket order no.
16	LEY-D016	CQ-C020
25	LEY-D025	CQ-C032
32/40	LEY-D032	CQ-C040
63	LEY-D063	CQ-C063
100	D5080	E5080

* Material: Cast iron (painted) / Cannot be used in environments where liquid splashes may cause rust.
* Double clevis pivot bracket are the same as the CQ series for sizes 16 to 63 and the C96 series for size 100.

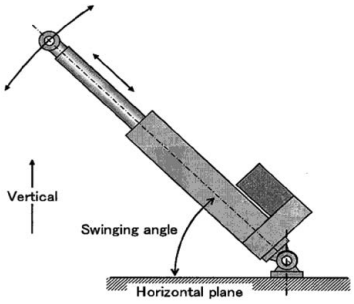

LEY/LEYG Series
Battery-less Absolute Encoder Type Specific Product Precautions

Be sure to read this before handling the products. Refer to page 1351 for safety instructions and pages 1352 to 1357 for electric actuator precautions.

Handling

⚠ Caution

1. Absolute encoder ID mismatch error at the first connection

In the following cases, an "ID mismatch error" alarm occurs after the power is turned ON. Perform a return to origin operation after resetting the alarm before use.

- When an electric actuator is connected and the power is turned ON for the first time after purchase*1
- When the actuator or motor is replaced
- When the controller is replaced

*1 If you have purchased an electric actuator and controller with the set part number, the pairing may have already been completed and the alarm may not be generated.

"ID mismatch error"

Operation is enabled by matching the encoder ID on the electric actuator side with the ID registered in the controller. This alarm occurs when the encoder ID is different from the registered contents of the controller. By resetting this alarm, the encoder ID is registered (paired) to the controller again.

When a controller is changed after pairing is completed				
	Encoder ID no. (* Numbers below are examples.)			
Actuator	17623	17623	17623	17623
Controller	17623	17699	17699	17623
ID mismatch error occurred?	No	Yes	Error reset ⇒ No	

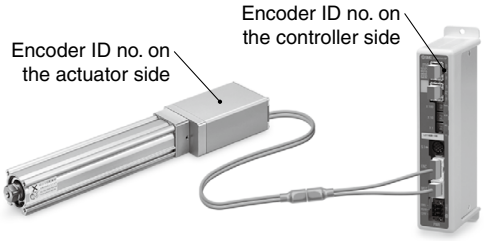

The ID number is automatically checked when the control power supply is turned ON.
An error is output if the ID number does not match.

2. In environments where strong magnetic fields are present, use may be limited.

A magnetic sensor is used in the encoder. Therefore, if the actuator motor is used in an environment where strong magnetic fields are present, malfunction or failure may occur.
Do not expose the actuator motor to magnetic fields with a magnetic flux density of 1 mT or more.
When installing an electric actuator and an air cylinder with an auto switch (ex. CDQ2 series) or multiple electric actuators side by side, maintain a space of 40 mm or more around the motor. Refer to the construction drawing of the actuator motor.

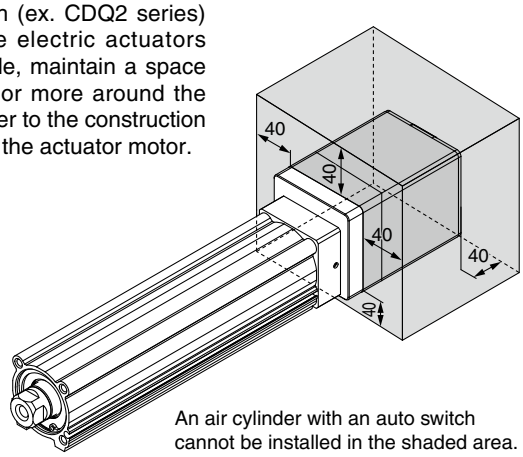

An air cylinder with an auto switch cannot be installed in the shaded area.

- **When lining up actuators**

SMC actuators can be used with their motors adjacent to each other. However, for actuators with a built-in auto switch magnet, maintain a space of 40 mm or more between the motors and the position where the magnet passes.
For the LEY series, the magnet is in the piston portion. (Refer to the construction drawings in the catalog for details.)

○ Can be used with their motors adjacent to each other

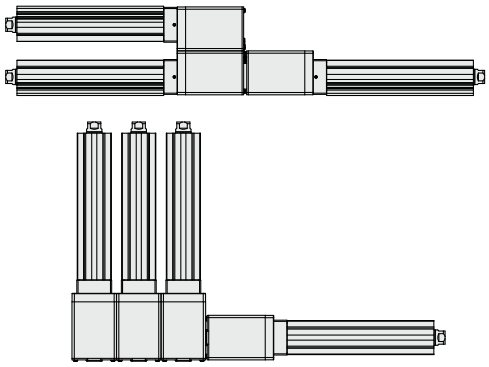

✕ Do not allow the motors to be in close proximity to the position where the magnet passes.

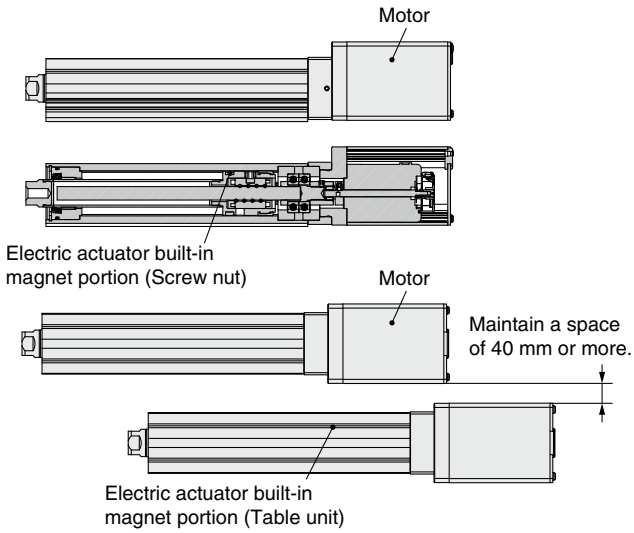

3. The connector size of the motor cable is different from that of the electric actuator with an incremental encoder.

The motor cable connector of an electric actuator with a battery-less absolute encoder is different from that of an electric actuator with an incremental encoder. As the connector cover dimensions are different, take the dimensions below into consideration during the design process.

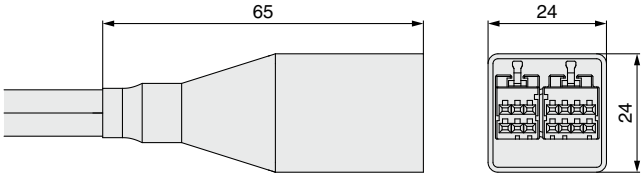

Battery-less absolute encoder connector cover dimensions