Multistage Ejector

Only for the models with a valve or pressure switch
The ZL1 with an AC voltage valve is not compliant.

Max. suction flow rate

3 types available: 100, 300, and 600 L/min (ANR)

New

Suction: 300 L	Suction: 600 L
ZL3	ZL6

- An N.O. specification has been added to the pressure switch for vacuum with energy saving function.
  Can hold vacuum*1 even when the power goes out or is turned off
  Prevents the sudden dropping of workpieces*1
- An IO-Link compatible vacuum pressure switch has been added. p. 4
  - Allows for ejector control with a single communication line
  - Reading of the device information and parameter batch settings are possible.

*1 Supposing the supply pressure is being maintained

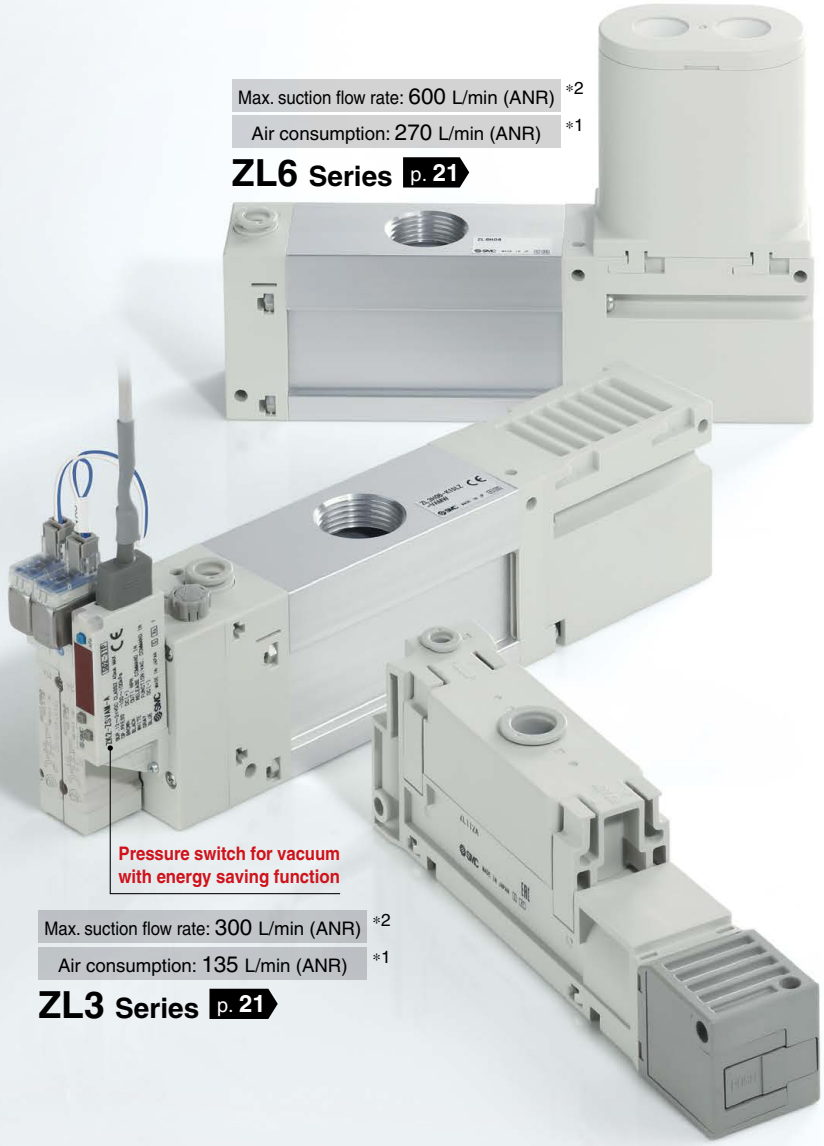

Max. suction flow rate: 600 L/min (ANR) *2
Air consumption: 270 L/min (ANR) *1
ZL6 Series p. 21

Max. suction flow rate: 300 L/min (ANR) *2
Air consumption: 135 L/min (ANR) *1
ZL3 Series p. 21

Max. suction flow rate: 100 L/min (ANR)
Air consumption: 57 L/min (ANR)
ZL1 Series p. 9

Air consumption

Suction: 300 L / ZL3
Suction: 600 L / ZL6

91% reduction
(Under SMC's measurement conditions)
Reduced by the pressure switch for vacuum with energy saving function and efficient ejectors

Suction: 100 L / ZL1

10% reduction
Reduction due to improved ejector efficiency
(Comparison with the previous ZL112)

Weight

Suction: 300 L / ZL3
Suction: 600 L / ZL6

Max. 44% reduction
ZL212 (Previous model): 700 g ➡ ZL3: 390 g

Suction: 100 L / ZL1

Max. 60% reduction
ZL112 (Previous model): 450 g ➡ ZL1: 180 g

*1 ZL3H, ZL6H (Standard supply pressure: 0.5 MPa)
*2 Branch + Port exhaust

ZL1/ZL3/ZL6 Series

SMC

CAT.ES100-108C

Energy saving

ZL3 ZL6

Air consumption

91% reduction∗1, ∗2

∗1 Under SMC's measurement conditions.
∗2 Reduced by the pressure switch for vacuum with energy saving function and efficient ejectors

Pressure switch for vacuum with energy saving function

Air consumption
90% reduction

More efficient ejector

Air consumption
10% reduction
(Compared to ZL212)

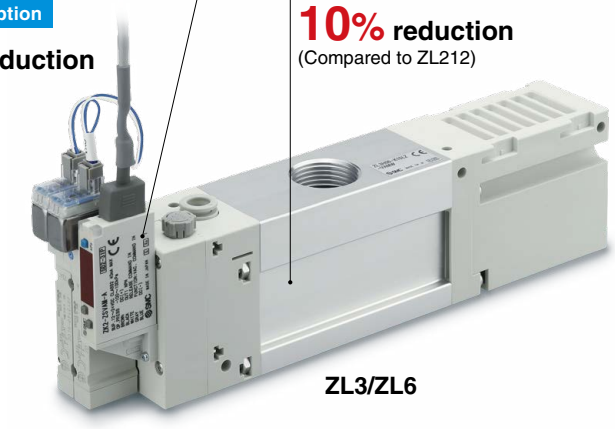

ZL3/ZL6

When the suction signal is ON, the ON/OFF operation of the supply valve is performed automatically within the set value by the pressure switch for vacuum with energy saving function.

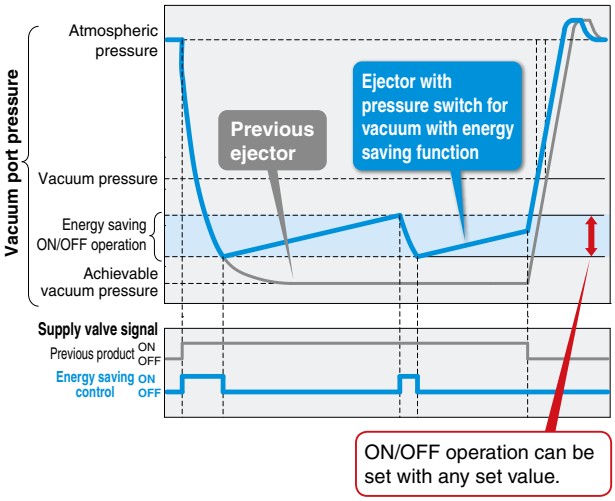

Energy saving efficiency: 91% reduction

Power consumption cost per year reduced by 15,356 JPY/year∗1

	Power consumption cost per year	Annual air consumption	Exhaust time	Air consumption
ZL3/With energy saving function	1,519 JPY/year	1,013 m³/year	**1.5 s**	135 L/min (ANR)
Previous product (ZL212)	16,875 JPY/year	11,250 m³/year	15 s	150 L/min (ANR)

Energy saving function

More efficient ejector

∗1 Cost conditions · Air unit 1.5 JPY/m³ (ANR), Annual operating cycles: 300000
(Operating hours: 10 hours/day, Operating days: 250 days/year, 120 cycles/h, when 1 unit is used)

High efficiency (Suction flow rate/Air consumption)

ZL1 ZL3 ZL6

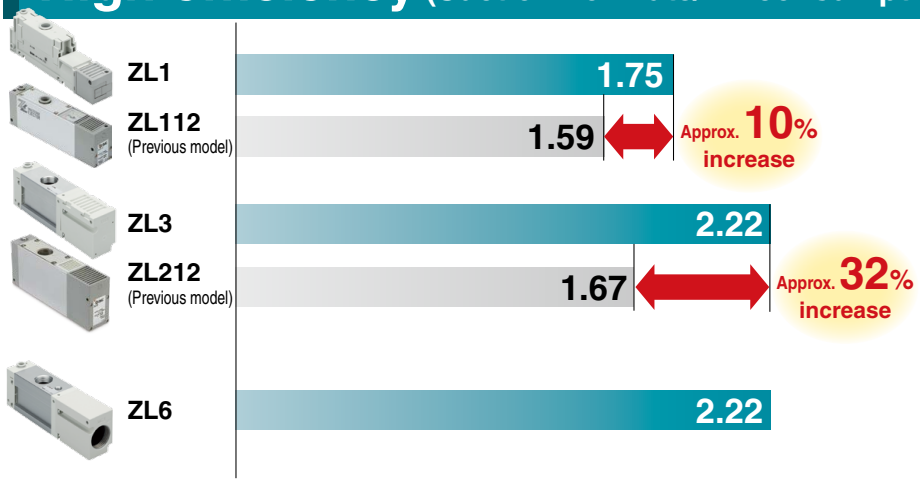

	Max. suction flow rate	Air consumption	Efficiency
ZL1	**100**	**57**	**1.75**
ZL112	100	63	1.59
ZL3	**300**	**135**	**2.22**
ZL212	250	150	1.67
ZL6	**600**	**270**	**2.22**

∗ ZL1 (Standard supply pressure: 0.33 MPa)
∗ ZL3H (Standard supply pressure: 0.5 MPa)

3-stage diffuser construction

ZL1 ZL3 ZL6

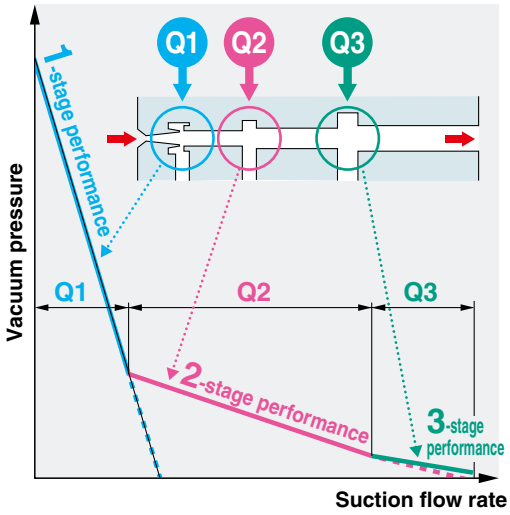

ZL1/ZL3

Max. suction flow rate	100/300 L/min (ANR)

Suction flow rate increased by 250%

(SMC comparison with the ZL1: 1-stage ø1.3 nozzle, suction flow rate of 40 L/min (ANR))

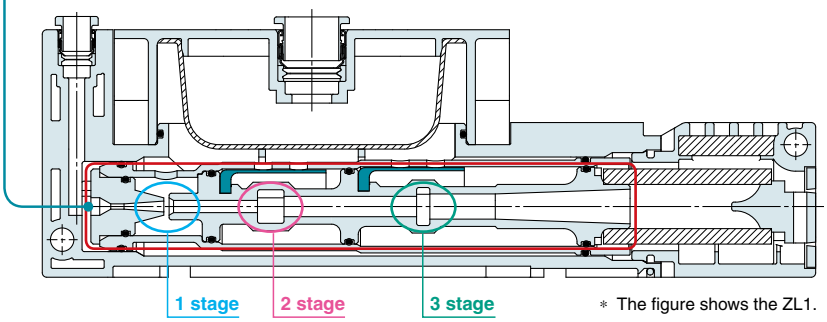

∗ The figure shows the ZL1.

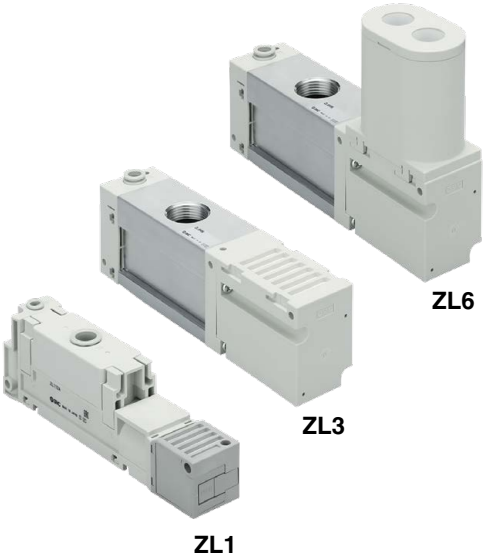

ZL6

Max. suction flow rate	600 L/min (ANR)∗1 570 L/min (ANR)∗2

∗1 Branch + Port exhaust
∗2 With a silencer attached

Compact with a large flow rate and 2 built-in ejector assemblies

Dedicated silencer

Exclusively designed silencer which secures suction flow rate and reduces exhaust noise

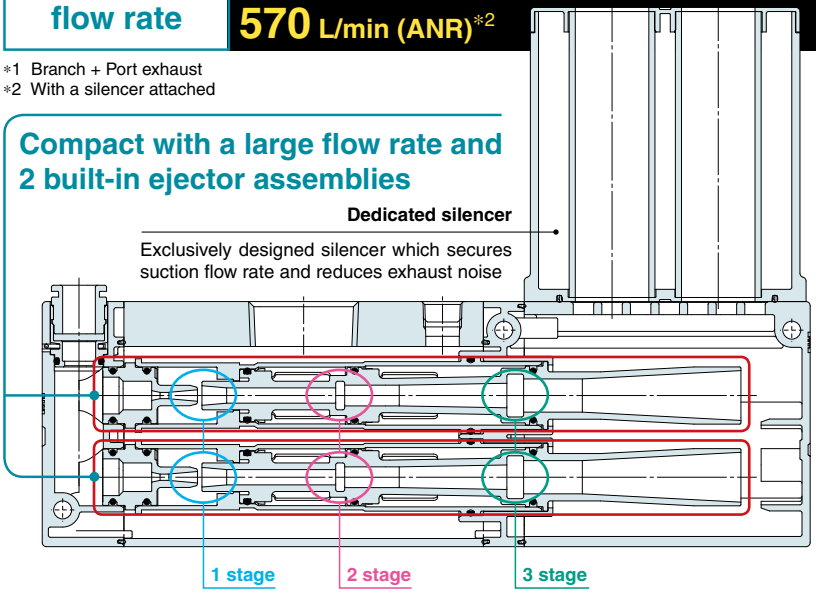

Applications

■ For the adsorption transfer of glass for automobiles

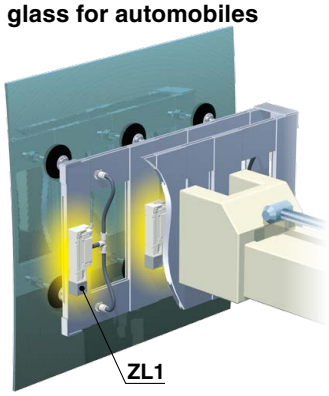

■ For the adsorption (clamping) of workpieces

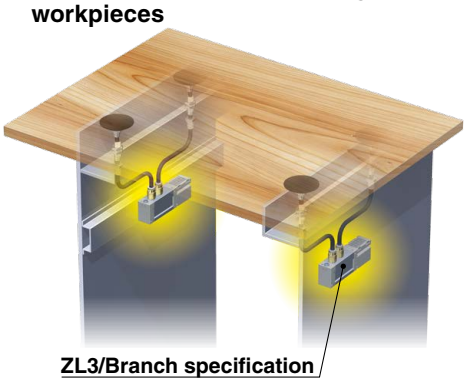

■ For the adsorption transfer of cardboard

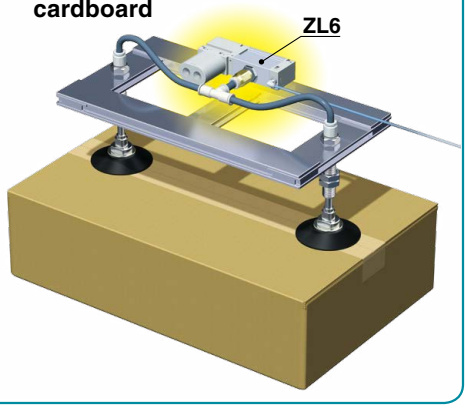

Various vacuum pressure sensors

ZL1 ZL3 ZL6

1 With vacuum pressure switch

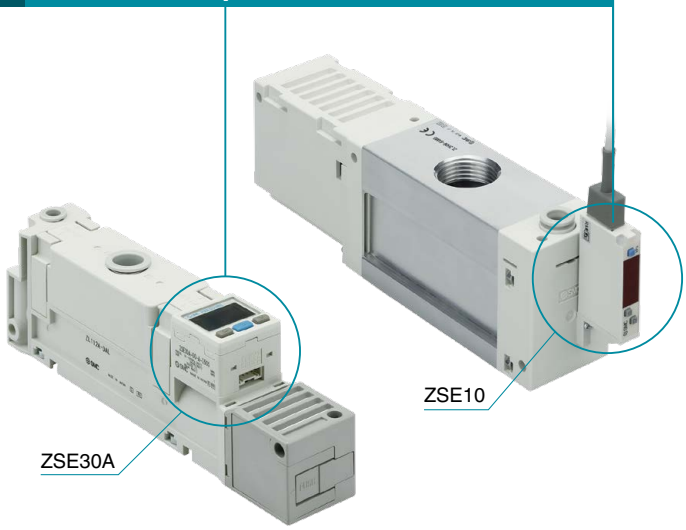

2 With pressure gauge

- Pressure range:
  –100 to 100 kPa (When the port is metric spec.)
  –30 inHg to 14 psi (When the port is inch spec.)

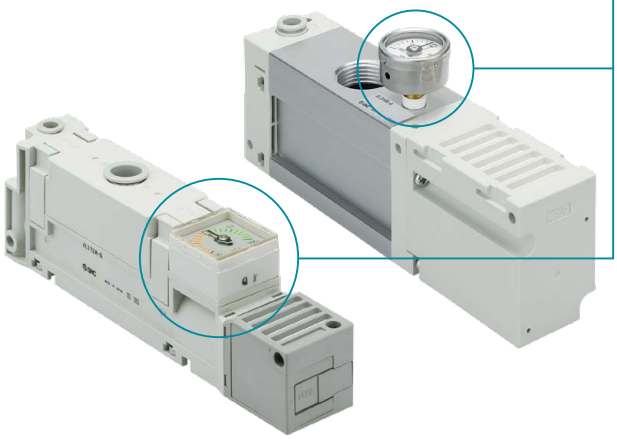

3 With vacuum pressure detection port ＊ Only applicable to the ZL1 and ZL3

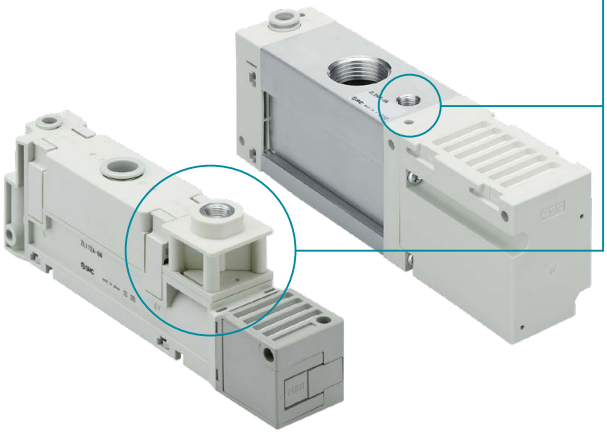

Without vacuum pressure sensor

Vacuum port: A branch specification is selectable.

ZL3 ZL6

- Easy connection of branch piping
- One-touch fittings can be connected without a bushing.

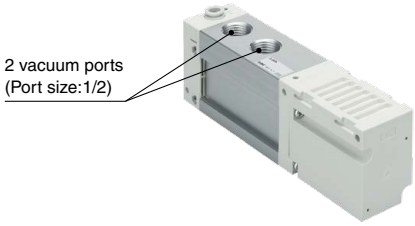

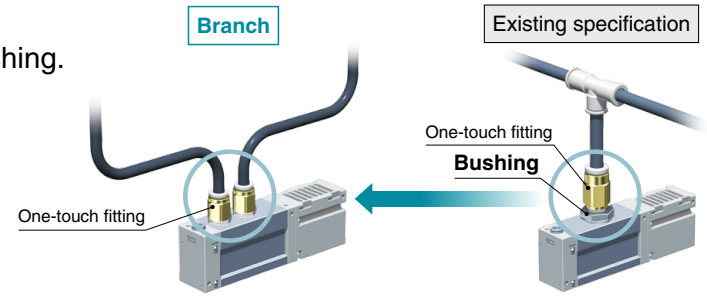

Standard supply pressure: A 0.35 MPa specification has been added.

ZL3 ZL6

- Supports the adoption of low supply pressure

IO-Link Compatible Vacuum Pressure Switch p. 22

ZL3 ZL6

Visualization of operation/equipment status/Remote monitoring and control by communication

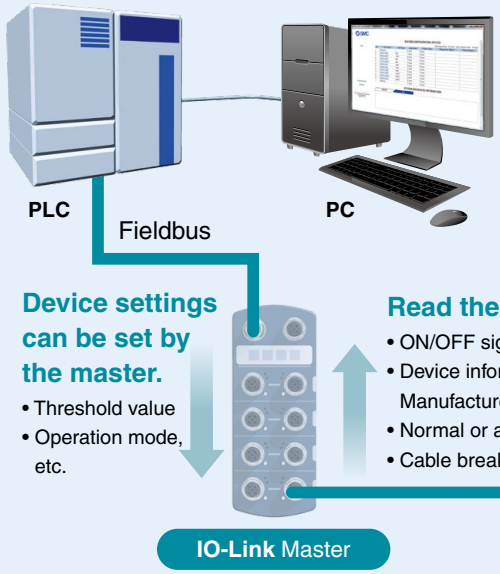

Configuration File (IODD File*1)

·Manufacturer ·Product part no. ·Set value

*1 IODD File:
IODD is an abbreviation of IO Device Description. This file is necessary for setting the device and connecting it to a master. Save the IODD file on the PC to be used to set the device prior to use.

IO-Link

IO-Link is an open communication interface technology between the sensor/actuator and the I/O terminal that is an international standard: IEC 61131-9.

Device settings can be set by the master.

- Threshold value
- Operation mode, etc.

Read the device data.

- ON/OFF signal and analog value
- Device information: Manufacturer, Product part number, Serial number, etc.
- Normal or abnormal device status
- Cable breakage

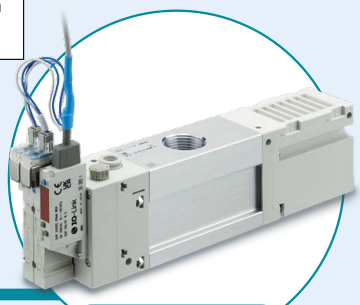

IO-Link Compatible Device
ZL3, ZL6

Implement diagnostic bits in the process data.

The diagnostic bit in the cyclic process data makes it easy to find problems with the equipment. It is possible to find problems with the equipment in real time using the cyclic (periodic) data and to monitor such problems in detail with the noncyclic (aperiodic) data.

Process Data

Input process data	Output process data
4 bytes	2 bytes

Error	Warning	Pressure value diagnosis
• OUT1/2 over current • Outside of zero-clear range • Temperature sensor failure • Master version mismatch	• Valve protection warning • Energy saving operation warning	• Above the upper limit/below the lower limit of the display range

Input Process Data

Byte	1								0							
Bit offset	15	14	13	12	11	10	9	8	7	6	5	4	3	2	1	0
Item	System error	Error	Valve warning	PD_IN forced output	Reservation			Pressure value diagnosis	Release valve output	Supply valve output	Reservation	Pressure confirmation	Pressure confirmation	Release confirmation	Energy saving confirmation	Suction confirmation

Byte	3								2							
Bit offset	31	30	29	28	27	26	25	24	23	22	21	20	19	18	17	16
Item	Measured pressure value															

Output Process Data

Byte	1								0							
Bit offset	15	14	13	12	11	10	9	8	7	6	5	4	3	2	1	0
Item	Reservation								Reservation			Automatic release forced OFF	Valve protection forced OFF	Energy saving control forced OFF	Release instruction	Vacuum instruction

Display function

Displays the output communication status and indicates the presence of communication data

Operation and Display

Communication with master	Status			Screen display	Description
Yes	IO-Link mode	Normal	Operate	oPE → 0.0 *1	Normal communication status (readout of measured value, command) * Output process data valid
				idLE ↔ 0.0 *1	Normal communication status (readout of measured value) * Output process data invalid
			Start up	Str ↔ 0.0 *1	At the start of communication
			Preoperate	PrE ↔ 0.0 *1	
		Abnormal	Version does not match	E15	The IO-Link version does not match that of the master.*2
No			Communication disconnection	idLE ↔ 0.0 *1 Str ↔ 0.0 *1 PrE ↔ 0.0 *1	Normal communication was not received for 1 s or longer.
	SIO mode*3			Sio ↔ 0.0 *1	General switch output

*1 Displays the measured value *2 When the product is connected to the master with version "V1.0," error E15 is generated. *3 Cannot be used in SIO mode

IO-Link Compatible Vacuum Pressure Switch p. 22 ZL3 ZL6

Energy saving is possible due to the vacuum pressure switch with energy saving function and efficient ejectors.

Air consumption 91% reduction *1

*1 Based on SMC's measurement conditions

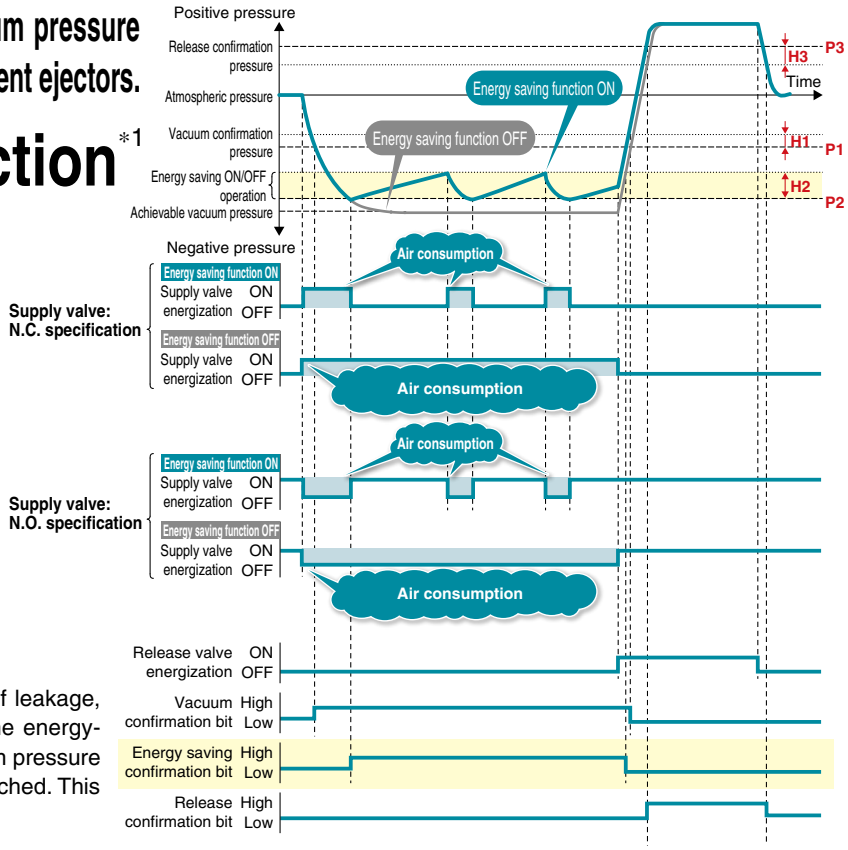

Energy saving function ON

Air is supplied **intermittently** when the vacuum decreases.

Energy saving function OFF

Air is supplied **continuously** during the adsorption of the workpiece.

Energy-saving pressure confirmation signal

When adsorbing a workpiece with a large amount of leakage, this signal allows for the confirmation of whether the energy-saving operation is being performed once the vacuum pressure that initiates the energy-saving control has been reached. This contributes to a reduction in air consumption.

Automatic Release Function

When the supply valve operation instruction is turned OFF, the release valve ON operation is started automatically, reducing the amount of time required for the customer to construct an operating program.

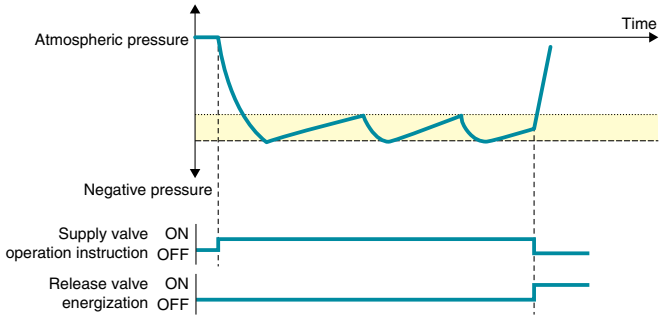

Valve Protection Function

If the supply valve reaches the set number of operations while the energy-saving function is in use, the energy-saving function automatically turns OFF and switches to continuous adsorption to prevent excessive valve operation.

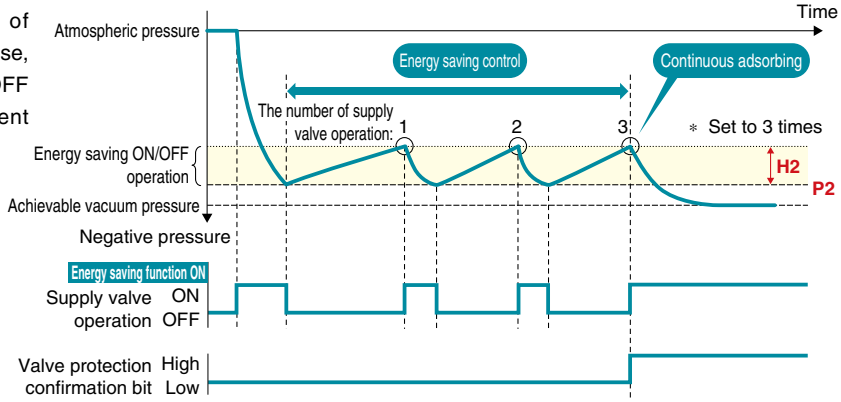

No tools are required! Reduced maintenance labor ZL1

Filter element

1 Press the levers.

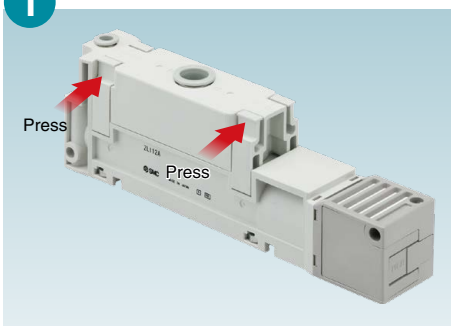

2 Remove the suction cover.

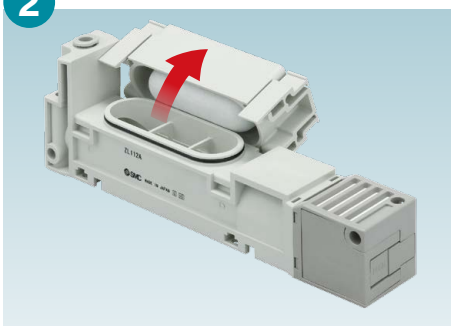

3 Replace the filter element.

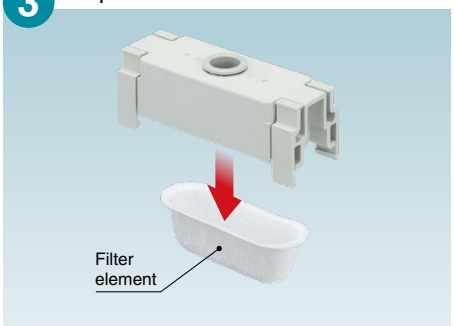

Sound absorbing material

1 Press the "PUSH" button.

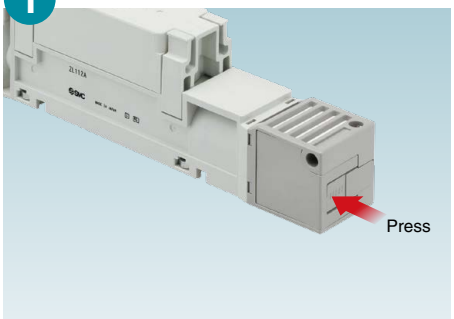

2 Remove the silencer cover.

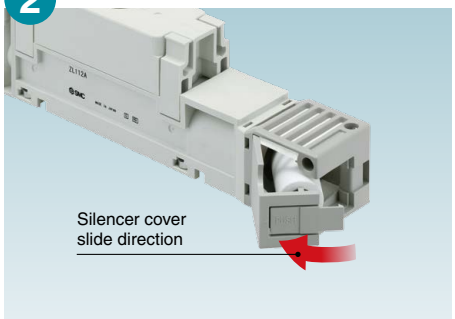

3 Replace the sound absorbing material.

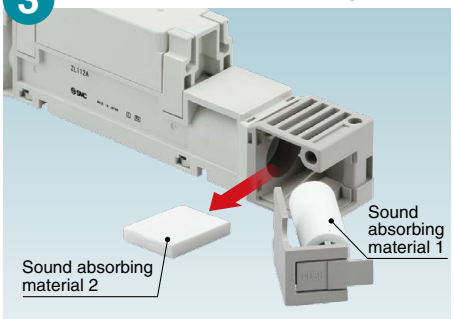

Supply valve/Release valve

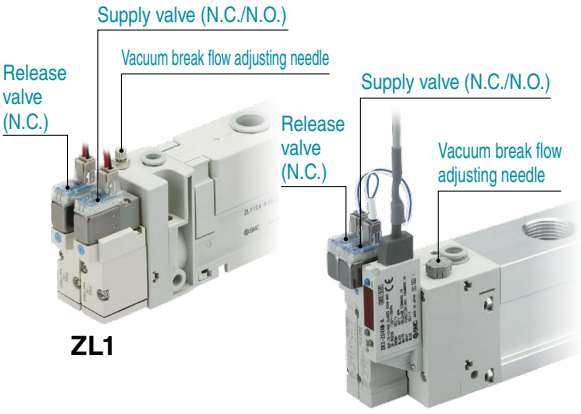

2 types of Exhaust methods

Exhaust method	ZL1	ZL3	ZL6
Silencer exhaust (Noise level)∗1	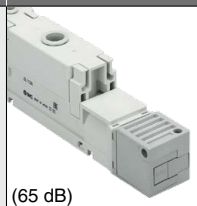 (65 dB)	(68 dB)	(68 dB)
Port exhaust			

∗1 Actual values under SMC's measurement conditions

Mounting option

ZL1 ZL3

An adapter assembly is required for bottom mounting interchangeability with the previous model.

∗ The mounting holes on the top and on the side are interchangeable as standard.

Example) For the ZL3

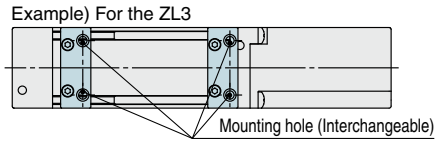

Bottom mounting for the ZL1 ↔ ZL112 (Previous model)

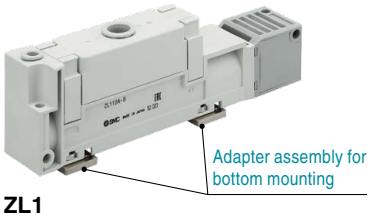

ZL1

Bottom mounting for the ZL3 ↔ ZL212 (Previous model)

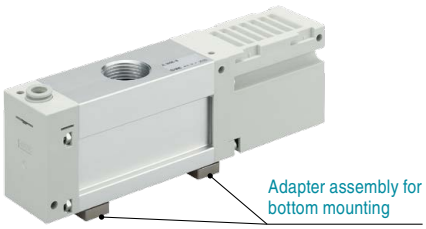

ZL3

Variations

Series		ZL1	ZL3M	ZL3H	ZL6M	ZL6H
Nominal nozzle size [mm]		1.2	1.9	1.5	1.9 x 2	1.5 x 2
Standard supply pressure[*1] [MPa]		0.33	0.35	0.50	0.35	0.50
Vacuum pressure [kPa]		–84	–91	–93	–91	–93
Max. suction flow rate [L/min (ANR)]		100	300[*2]		600[*2]	
Air consumption [L/min (ANR)]		57	150	135	300	270
Port size	**Supply port**	ø6 ø1/4"	ø8 ø5/16"			
	Vacuum port	ø12 ø1/2"	3/4 (Rc, NPT, G) 2 x 1/2 (Rc, NPT, G) (Branch specification)			
With or without valve	**With supply valve and release valve**	●	●	●	●	●
	Supply valve	●	●	●	●	●
	None	●	●	●	●	●
Exhaust type	**Silencer exhaust**	●	●	●	●	●
	Port exhaust	●	●	●	●	●
Pressure switch for vacuum with energy saving function	**N.C. specification**		●	●	●	●
	N.O. specification		●	●	●	●
IO-Link compatible vacuum pressure switch (The energy-saving function can be turned ON or OFF via the parameter settings.)	**N.C. specification**		●	●	●	●
	N.O. specification		●	●	●	●
Vacuum pressure sensor	**With vacuum pressure switch**	●	●	●	●	●
	With pressure gauge	●	●	●	●	●
	With detection port (Port size 1/8)	●	●	●	●	●
	None	●	●	●	●	●

*1 Without valve
*2 Branch specification + Port exhaust

CONTENTS

Multistage Ejector *ZL1/ZL3/ZL6 Series*

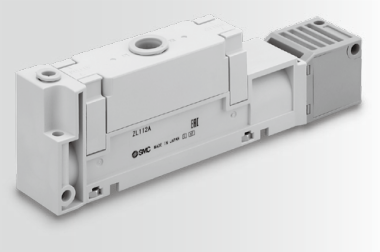

Multistage Ejector *ZL1 Series*

How to Order ..... p. 9
Ejector Specifications ..... p. 10
Supply Valve/Release Valve Specifications ..... p. 10
Pressure Gauge Specifications ..... p. 10
Vacuum Pressure Switch Specifications ..... p. 11
Weight ..... p. 11
Vacuum Pressure Switch/Internal Circuits and Wiring Examples ..... p. 12
Exhaust Characteristics/Flow Rate Characteristics/Time to Reach Vacuum ..... p. 13
Vacuum Break Flow Rate Characteristics ..... p. 13
Construction ..... p. 14
How to Order Replacement Parts ..... p. 15
Dimensions ..... p. 17

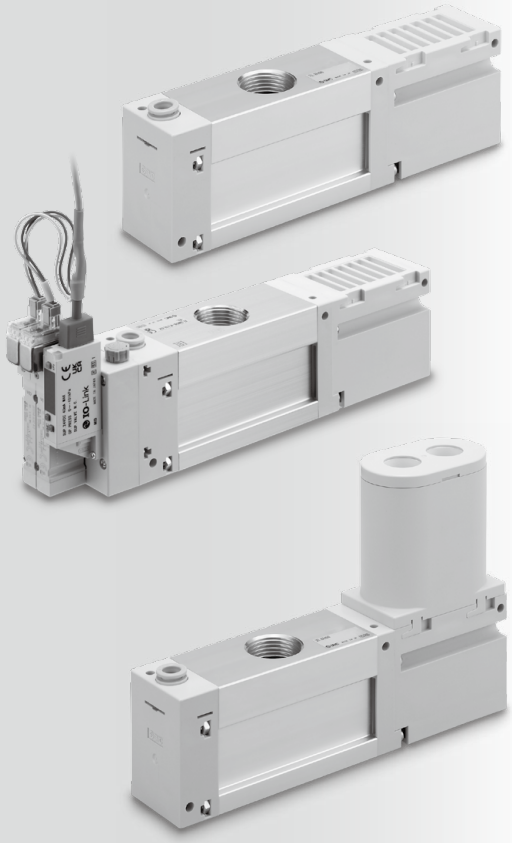

Multistage Ejector *ZL3/ZL6 Series*

How to Order ..... p. 21
Ejector Specifications ..... p. 23
Supply Valve/Release Valve Specifications ..... p. 23
Pressure Gauge Specifications ..... p. 23
Weight ..... p. 24
Vacuum Pressure Switch Specifications ..... p. 24
IO-Link Compatible Vacuum Pressure Switch Specifications ..... p. 25
Internal Circuits and Wiring Examples ..... p. 26
IO-Link: Process Data ..... p. 26
Exhaust Characteristics/Flow Rate Characteristics ..... p. 27
Time to Reach Vacuum/Break Flow Rate Characteristics/Vacuum Breaking Time ..... p. 28
Construction ..... p. 29
How to Order Replacement Parts ..... p. 30
Dimensions ..... p. 32
Accessories ..... p. 36

Specific Product Precautions ..... p. 38

Safety Instructions ..... Back cover

Multistage Ejector

Max. suction flow rate: 100 L/min (ANR)

ZL1 Series

Only for the models with a valve or pressure switch AC voltage valves are not compliant.

RoHS

How to Order

Without valve ZL 1 12A ☐☐ – ☐☐☐☐ – ☐

With valve ZL 1 12A ☐☐ – K1 5 M Z ☐ – D A M L – ☐

Max. suction flow rate: 100 L/min (ANR)

❶ ❷ Ejector — ❸ ❹ ❺ ❻ ❼ Supply valve/Release valve — ❽ ❾ ❿ ⓫ Vacuum pressure sensor — ⓬

❶ Supply (P), Vacuum (V) port/ One-touch fitting connection size

Symbol	Supply (P) port	Vacuum (V) port	Pressure gauge unit*1
Nil	ø6 (Metric)	ø12 (Metric)	kPa
N	ø1/4" (Inch)	ø1/2" (Inch)	inHg·psi

*1 When the vacuum pressure gauge (Symbol: G) is selected for ❽, these are the unit specification options. Under the New Measurement Act, products with inHg·psi unit specifications are not permitted for use in Japan.

❷ Exhaust method

Nil	Silencer exhaust
P	Rc1/2 port exhaust
PF	G1/2 port exhaust*2
PN	1/2-14NPT port exhaust

*2 The thread ridge shape is in compliance with G thread standard ISO 228-1, but the other shapes are not in compliance with ISO 16030 or ISO 1179.

❸ Supply valve/Release valve combination

K1	Supply valve (N.C.), Release valve (N.C.)
K2	Supply valve (N.C.)
B1	Supply valve (N.O.), Release valve (N.C.)
B2	Supply valve (N.O.)

❹ Rated voltage

DC		CE/UKCA-compliant
5	24 VDC	●
6	12 VDC	●
V	6 VDC	●
S	5 VDC	●
R	3 VDC	●

AC (50/60 Hz)		CE/UKCA-compliant
1	100 VAC	—
2	200 VAC	—
3	110 VAC [115 VAC]	—
4	220 VAC [230 VAC]	—

* CE/UKCA-compliant: For DC only

❺ Electrical entry

24, 12, 6, 5, 3 VDC/100, 110, 200, 220 VAC

Grommet	L plug connector	M plug connector	
G: Lead wire length 300 mm	**L**: With lead wire (300 mm)	**M**: With lead wire (300 mm)	**MN**: Without lead wire
H: Lead wire length 600 mm	**LN**: Without lead wire	**LO**: Without connector	**MO**: Without connector

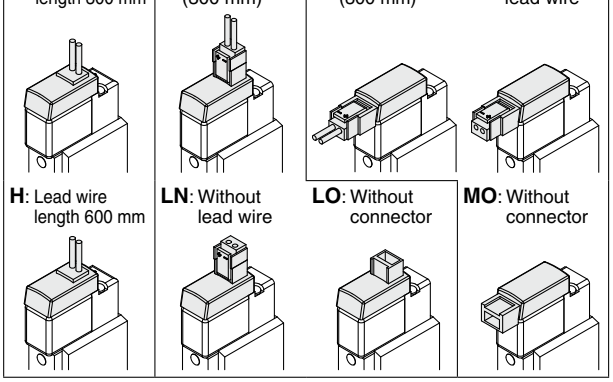

* LN and MN types: With 2 sockets per valve
* Refer to page 15 for the lead wire length of L and M plug connectors.

❻ Light/Surge voltage suppressor

Nil	Without light/surge voltage suppressor
S	With surge voltage suppressor
Z	With light/surge voltage suppressor
U	With light/surge voltage suppressor (Non-polar type)

* For type "U," only DC voltage is available.
* There is no "S" option for AC voltage valves because the generation of surge voltage is prevented by a rectifier.

❼ Manual override

Nil	Non-locking push type
D	Push-turn locking slotted type

❽ Vacuum pressure sensor

Nil	None
GN	With vacuum pressure detection port (Rc1/8)
G	Pressure gauge*3
D	Vacuum pressure switch

*3 For ❶, the units for metric spec. fittings are in kPa. The units for inch spec. fittings are in inHg·psi. (Under the New Measurement Act, products with these unit specifications are not permitted for use in Japan.)

⓬ Option (Included)

Nil	None
B	Adapter assembly for bottom mounting (ZL112A-AD1-A)

* Bottom mounting screw pitch = 28 mm (Interchangeable with the previous ZL112 model)
* 2 pcs./set, with 4 bolts
* The mounting holes on the top and on the side are interchangeable as standard.

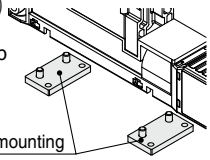

Adapter assembly for bottom mounting

Applicable only when "D" is selected for ❽ Vacuum pressure sensor

❾ Output

N	NPN open collector 1 output
P	PNP open collector 1 output
A	NPN open collector 2 outputs
B	PNP open collector 2 outputs
C	NPN open collector 1 output + Analog voltage output
D	NPN open collector 1 output + Analog current output
E	PNP open collector 1 output + Analog voltage output
F	PNP open collector 1 output + Analog current output

❿ Unit

Nil	With unit switching function
M	SI unit only (kPa)
P	With unit switching function (Initial value psi)

* Under the New Measurement Act, switches with the unit switching function are not permitted for use in Japan.

⓫ Lead wire

Nil	Without lead wire
L	Lead wire with connector (2 m)

* For output types "N" and "P," a 3-core lead wire is included. For other output types, a 4-core lead wire is included.

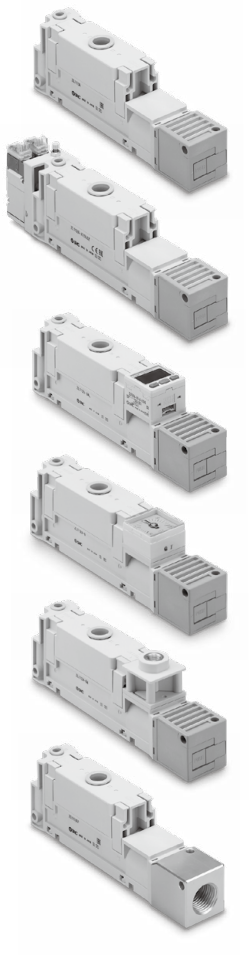

Ejector Specifications

Model		ZL1
Nozzle size [mm]		1.2
Standard supply pressure [MPa]	Without valve	0.33
	With valve	0.35
Max. vacuum pressure [kPa]*1		–84
Max. suction flow rate [L/min (ANR)]*1		100
Air consumption [L/min (ANR)]*1		57
Supply pressure range [MPa]		0.2 to 0.5
Operating temperature range [°C]		5 to 50 (No condensation)
Fluid		Air
Vibration resistance [m/s²]*2	Without pressure switch	30
	With pressure switch	20
Impact resistance [m/s²]*3	Without pressure switch	150
	With pressure switch	100

*1 Values are at the standard supply pressure and based on SMC's measurement standards. They depend on atmospheric pressure (weather, altitude, etc.) and the measurement method.
*2 10 to 500 Hz for 2 hours in each direction of X, Y, and Z (De-energized, Initial value)
*3 3 times in each direction of X, Y, and Z (De-energized, Initial value)

Supply Valve/Release Valve Specifications

Model	SYJ5□4
Response time (at 0.5 MPa)*1	25 ms or less
Max. operating frequency	5 Hz
Manual override	Non-locking push type, Push-turn locking slotted type

*1 Based on JIS B 8419: 2010 dynamic performance test (Standard type: Coil temperature 20°C, at rated voltage, without surge voltage suppressor)
* Refer to the **Web Catalog** for details on the SYJ500 series.

Pressure Gauge Specifications

Model	ZL112A-PG1-A	ZL112A-PG2-A
Fluid	Air	
Pressure range	–100 to 100 kPa	–30 inHg to 14 psi
Scale range (Angular)	230°	
Accuracy	±3% F.S. (Full span)	
Operating temperature range	0 to 50°C	
Material	Housing: Polycarbonate/ABS resin	

Noise Level (Reference values)

Model	ZL1
Noise level [dB(A)]	65

Actual values under SMC's measurement conditions (Not guaranteed values)

* **The solenoid valve mounted on this product is the SMC 3-port solenoid valve SYJ500 series.**

For details on solenoid valve functions, refer to the Operation Manual of the SYJ500 series on the SMC website (https://www.smcworld.com).

3-port solenoid valve SYJ500 series

SYJ5□4-□□□□-□

Multistage ejector ZL1 series

ZL112A□□-□□□□□-□□□□-□

- CE/UKCA-compliant

Nil	AC
Q	DC

- Manual override
- Light/Surge voltage suppressor
- Electrical entry
- Rated voltage
- Supply valve/Release valve

ZL112A□□-K1
Select "1" for both supply and release valve.

ZL112A□□-K2
Select "1" for supply valve.

ZL112A□□-B1
Select "2" for supply valve.
Select "1" for release valve.

ZL112A□□-B2
Select "2" for supply valve.

Refer to page 15.

Vacuum Pressure Switch Specifications

∗ The vacuum pressure switch mounted on this product is equivalent to our SMC product, the ZSE30A series digital pressure switch.

For details on vacuum pressure switch functions, refer to the Operation Manual of the ZSE30A series on the SMC website (https://www.smcworld.com).

● Pressure switch correspondence table

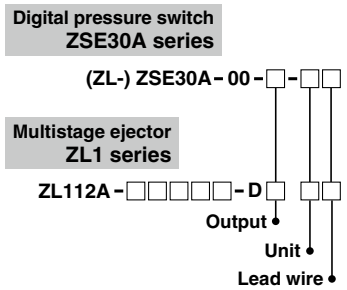

Refer to page 15.

Model			ZL-ZSE30A
Rated pressure range			0.0 to –101.0 kPa
Set pressure range			10.0 to –105.0 kPa
Withstand pressure			500 kPa
Smallest settable increment			0.1 kPa
Applicable fluid			Air, Non-corrosive gas, Non-flammable gas
Power supply voltage			12 to 24 VDC ±10% (with power supply polarity protection)
Current consumption			40 mA (at no load)
Switch output			NPN or PNP open collector 1 output NPN or PNP open collector 2 outputs (selectable)
	Max. load current		80 mA
	Max. applied voltage		28 V (at NPN output)
	Residual voltage		1 V or less (with load current of 80 mA)
	Response time		2.5 ms or less (with anti-chattering function: 20, 100, 500, 1000, 2000 ms)
	Short-circuit protection		Yes
Repeatability			±0.2% F.S. ±1 digit
Hysteresis	Hysteresis mode		Variable (0 or above)
	Window comparator mode		
Analog output	Voltage output ∗1	Output voltage (Rated pressure range)	1 to 5 V ±2.5% F.S.
		Linearity	±1% F.S. or less
		Output impedance	Approx. 1 kΩ
	Current output ∗2	Output current (Rated pressure range)	4 to 20 mA ±2.5% F.S.
		Linearity	±1% F.S. or less
		Load impedance	Maximum load impedance: Power supply voltage 12 V: 300 Ω, Power supply voltage 24 V: 600 Ω Minimum load impedance: 50 Ω
Display			4-digit, 7-segment, 2-color LCD (Red/Green) Sampling cycle: 5 times/s
Display accuracy			±2% F.S. ±1 digit (Ambient temperature of 25°C)
Indicator light			Lights up when switch output is turned ON. (OUT1: Green, OUT2: Red)
Environmental resistance	Enclosure		IP40
	Operating temperature range		Operating: 0 to 50°C, Stored: –10 to 60°C (No freezing or condensation)
	Operating humidity range		Operating/Stored: 35 to 85% RH (No condensation)
	Withstand voltage		1000 VAC for 1 min between terminals and housing
	Insulation resistance		50 MΩ or more (500 VDC measured via megohmmeter) between terminals and housing
Temperature characteristics			±2% F.S. (25°C standard)
Lead wire			Oilproof heavy-duty vinyl cable, 3 cores ø3.5, 2 m 4 cores Conductor area: 0.15 mm² (AWG26) Insulator O.D.: 1.0 mm
Standards			CE/UKCA, RoHS compliant

∗1 When analog voltage output is selected, analog current output cannot be used together.
∗2 When analog current output is selected, analog voltage output cannot be used together.

Weight

[g]

Model	ZL1
Basic type	180
Port exhaust	+70
Vacuum pressure switch (Excluding lead wire)	+25
Vacuum pressure switch (Including 3 cores lead wire)	+56
Vacuum pressure switch (Including 4 cores lead wire)	+60
With supply valve and release valve	+105
With supply valve and without release valve	+65

Vacuum Pressure Switch/Internal Circuits and Wiring Examples

Output specification "N"
NPN (1 output)

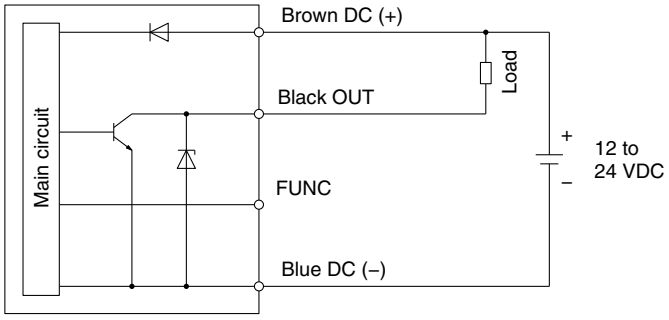

Output specification "P"
PNP (1 output)

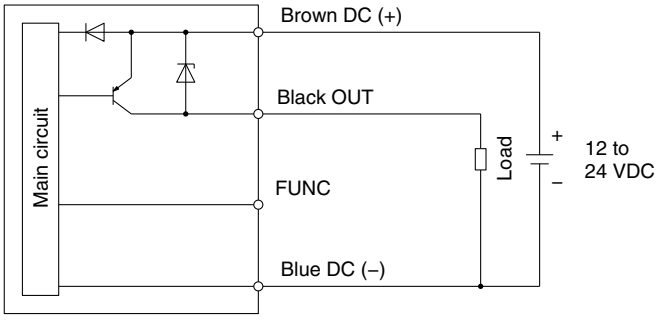

Output specification "A"
NPN (2 outputs)

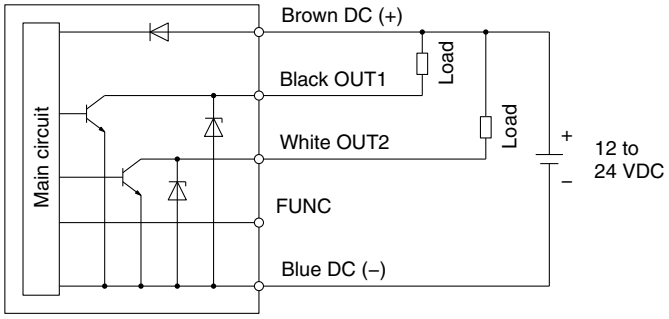

Output specification "B"
PNP (2 outputs)

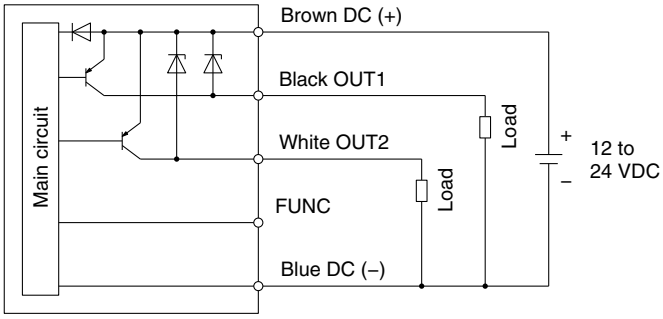

Output specification "C"
NPN (1 output) + Analog voltage output

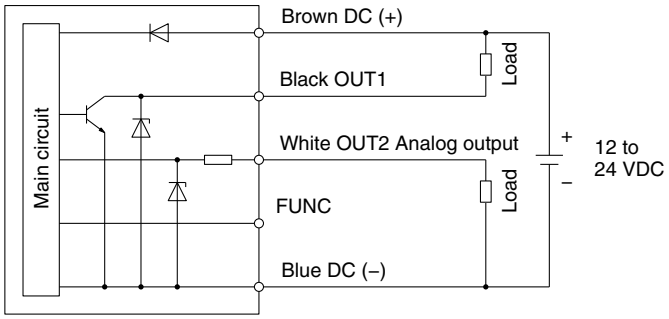

Output specification "D"
NPN (1 output) + Analog current output

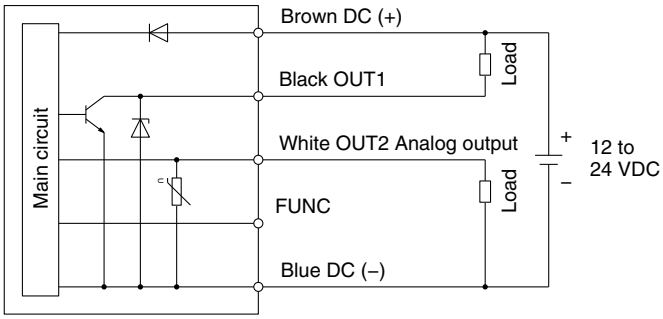

Output specification "E"
PNP (1 output) + Analog voltage output

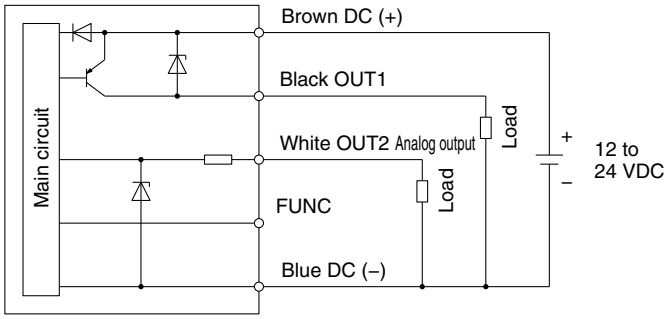

Output specification "F"
PNP (1 output) + Analog current output

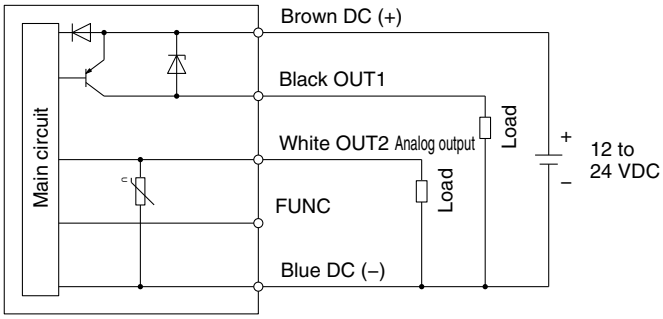

∗ Refer to the **Web Catalog** for details on pressure switches.

Exhaust Characteristics/Flow Rate Characteristics/Time to Reach Vacuum (Representative value)

Exhaust Characteristics (Without valve)

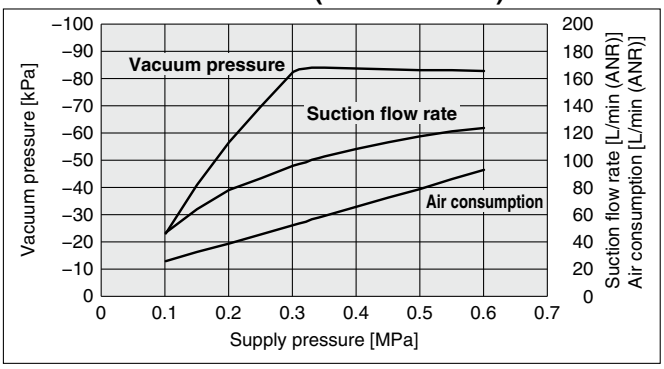

Exhaust Characteristics (With valve)

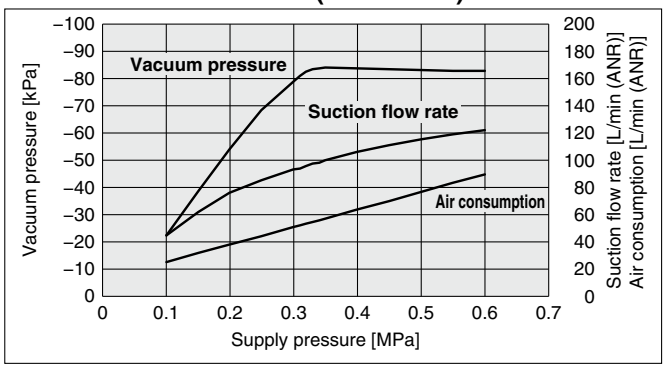

Standard supply pressure: 0.33 MPa (Without valve)
0.35 MPa (With valve)

Flow Rate Characteristics

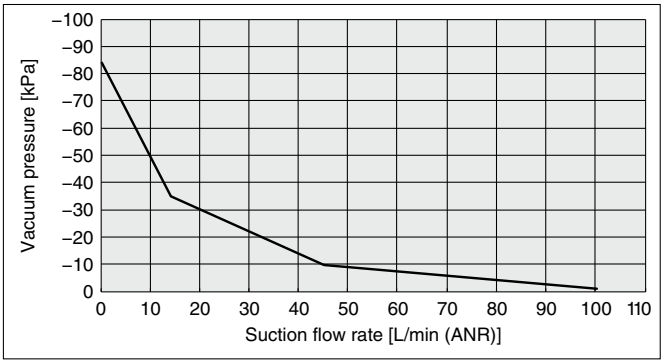

Time to Reach Vacuum

Tank capacity: 1 L

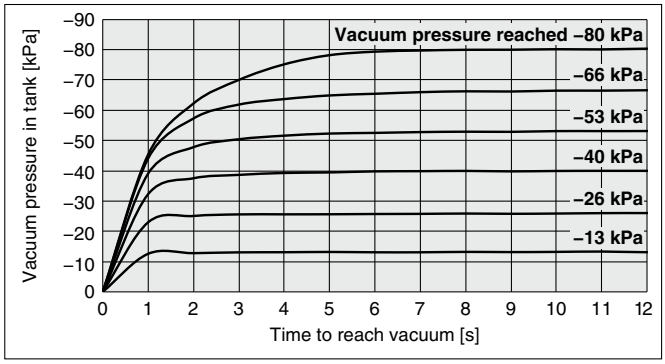

Vacuum Break Flow Rate Characteristics*1 (Representative value)

*1 Silencer exhaust specification

The graph shows the flow rate characteristics at different supply pressures when the vacuum break flow adjusting needle is open from the fully closed state.

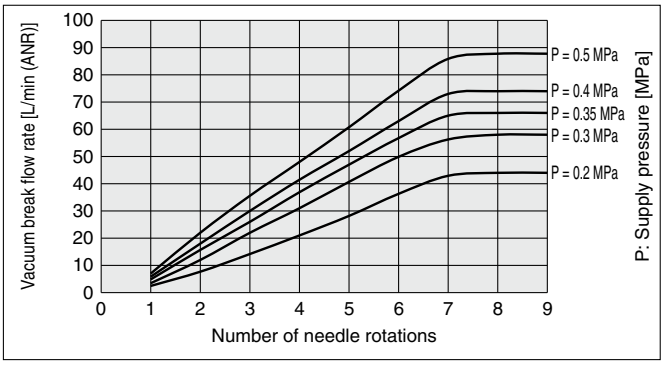

* The flow rates shown in this graph are representative values for the ejector with silencer exhaust specification, and the suction flow may vary depending on the piping conditions at the vacuum (V) port and exhaust (EXH) port, etc.

How to Read the Flow Rate Characteristics

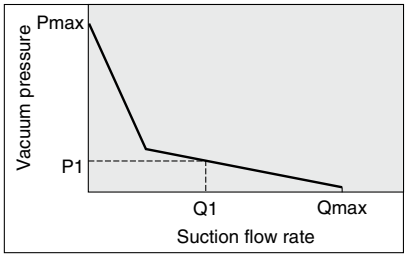

The flow rate characteristics indicate the relationship between the vacuum pressure and the suction flow rate of the ejector. They also show that when the suction flow rate changes, the vacuum pressure also changes. In general, this indicates the relationship at the ejector's standard operating pressure.

In the graph, Pmax indicates the max. vacuum pressure, and Qmax indicates the max. suction flow rate. These are the values that are published as specifications in catalogs, etc. Changes in vacuum pressure are explained below.

1. If the ejector's suction port is closed and sealed tight, the suction flow rate becomes "0," and the vacuum pressure increases to the max. (Pmax).
2. If the suction port is opened and air is allowed to flow (the air leaks), the suction flow rate increases, and the vacuum pressure decreases. (The condition of P1 and Q1)
3. If the suction port is opened completely, the suction flow rate increases to the max. (Qmax), while the vacuum pressure then drops almost to "0" (atmospheric pressure). When adsorbing workpieces which are permeable, subject to leakage, etc., caution is required as the vacuum pressure will not be very high.

How to Read the Time to Reach Vacuum

The graph indicates the time required to reach a vacuum pressure determined by adsorption conditions for workpieces, etc., starting from atmospheric pressure in a 1 L sealed tank. For the ZL1, approximately 7.0 seconds are necessary to attain a vacuum pressure of –80 kPa.

Construction

Without valve or vacuum pressure switch, Silencer exhaust

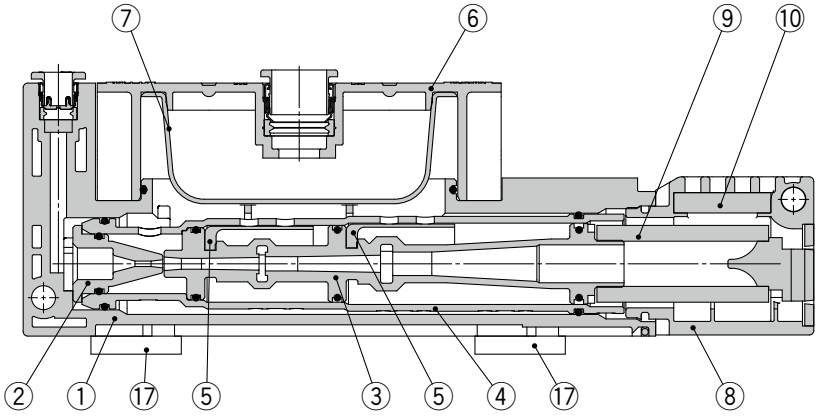

With valve and vacuum pressure switch, Port exhaust

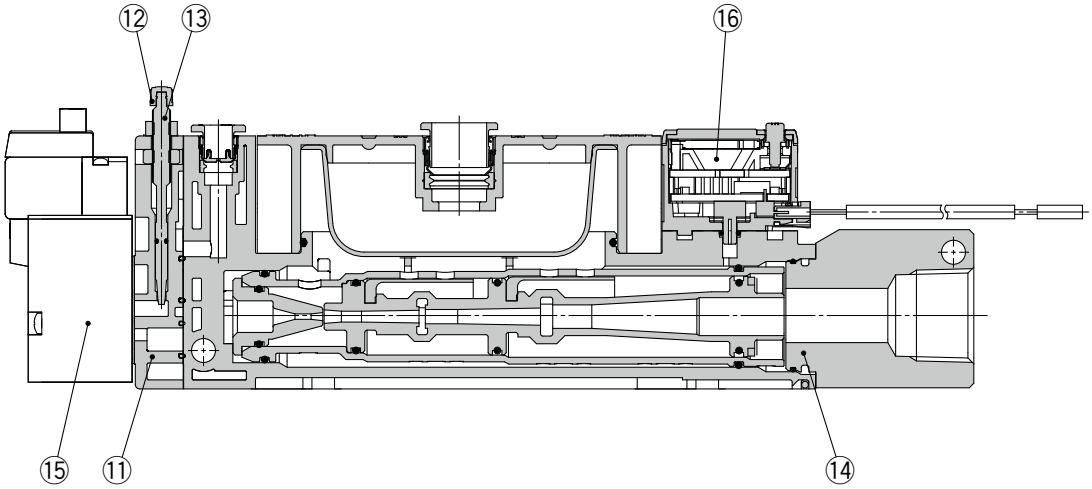

Component Parts

No.	Description	Material	Note
1	**Body**	PBT	—
2	**Nozzle**	POM	Refer to 6 on page 16 for replacement parts.
3	**Diffuser**	PBT	
4	**Attachment**	POM	
5	**Check valve**	FKM	
6	**Suction cover**	PBT	Refer to 3 on page 15 for replacement parts.
7	**Filter element**	Non-woven fabric	Refer to 8 on page 16 for replacement parts.
8	**Silencer case assembly**	PBT/Stainless steel	Refer to 4 on page 16 for replacement parts.
9	**Sound absorbing material 1**	Resin	Refer to 9 on page 16 for replacement parts.
10	**Sound absorbing material 2**	Resin	
11	**Valve plate**	PBT	Refer to 7 on page 16 for replacement parts.
12	**Knob**	POM	
13	**Needle**	Brass (Electroless nickel plating)	
14	**Port block assembly**	Aluminum alloy/NBR/Stainless steel	Refer to 5 on page 16 for replacement parts.
15	**Supply valve, Release valve**	—	Refer to 1 on page 15 for replacement parts.
16	**Vacuum pressure switch**	—	Refer to 2 on page 15 for replacement parts.
17	**Adapter assembly for bottom mounting**	Brass (Electroless nickel plating)	Refer to 10 on page 16 for replacement parts.
—	**Seal material (O-ring, etc.)**	HNBR/NBR	—
—	**Screws for assembly**	Steel	—

How to Order Replacement Parts

1 How to Order Supply Valve/Release Valve

SYJ5 1 4 – 5 M Z □ – Q

❶ ❷ ❸ ❹ ❺ ❻

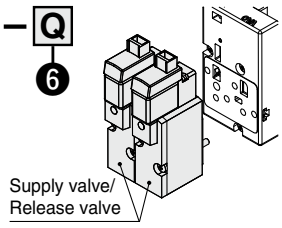

❶ Type of actuation

1	Normally closed
2	Normally open (Supply valve only)

❷ Rated voltage

DC		CE/UKCA-compliant
5	24 VDC	●
6	12 VDC	●
V	6 VDC	●
S	5 VDC	●
R	3 VDC	●

AC (50/60 Hz)		CE/UKCA-compliant
1	100 VAC	—
2	200 VAC	—
3	110 VAC [115 VAC]	—
4	220 VAC [230 VAC]	—

∗ CE/UKCA-compliant: For DC only

❸ Electrical entry

24, 12, 6, 5, 3 VDC/100, 110, 200, 220 VAC			
Grommet	L plug connector	M plug connector	
G: Lead wire length 300 mm	**L**: With lead wire (300 mm)	**M**: With lead wire (300 mm)	**MN**: Without lead wire
H: Lead wire length 600 mm	**LN**: Without lead wire	**LO**: Without connector	**MO**: Without connector

∗ LN and MN types: With 2 sockets
∗ For the lead wire length of the L and M plug connectors, refer to the lead wire with connector assembly for supply valves and release valves.

❹ Light/Surge voltage suppressor
(Electrical entry: G, H, L, or M)

Nil	Without light/surge voltage suppressor
S	With surge voltage suppressor
Z	With light/surge voltage suppressor
U	With light/surge voltage suppressor (Non-polar type)

∗ There is no "S" option for AC voltage valves because the generation of surge voltage is prevented by a rectifier.
∗ For type "U," only DC voltage is available.

❺ Manual override

Nil	Non-locking push type
D	Push-turn locking slotted type

❻ CE/UKCA-compliant

Nil	— (For AC)
Q	CE/UKCA-compliant (For DC)

How to Order Connector and Socket for Supply Valve/Release Valve

SY100 – 30 – A

∗ With connector and 2 sockets only

How to Order Lead Wire with Connector Assembly for Supply Valve/Release Valve

SY100 – 30 – 4 A – 6

❶ ❷

❶ Power supply voltage

1	100 VAC
2	200 VAC
3	Other VAC
4	DC

❷ Lead wire length

Nil	300 mm
6	600 mm
10	1000 mm
15	1500 mm
20	2000 mm
25	2500 mm
30	3000 mm
50	5000 mm

2 How to Order Vacuum Pressure Switch

ZL – ZSE30A – 00 – A – M L

❶ ❷ ❸

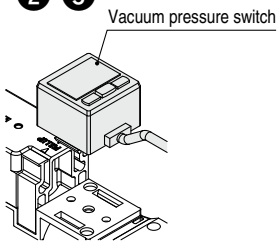

❶ Output

N	NPN open collector 1 output
P	PNP open collector 1 output
A	NPN open collector 2 outputs
B	PNP open collector 2 outputs
C	NPN open collector 1 output + Analog voltage output
D	NPN open collector 1 output + Analog current output
E	PNP open collector 1 output + Analog voltage output
F	PNP open collector 1 output + Analog current output

❷ Unit

Nil	With unit switching function∗1
M	SI unit only∗2
P	With unit switching function (Initial value psi)∗1

∗1 Under the New Measurement Act, switches with the unit switching function are not permitted for use in Japan.
∗2 Fixed unit: kPa

❸ Connector/Lead wire

Nil	Without lead wire
L	Lead wire with connector (Length: 2 m)

∗ For output types "N" and "P," a 3-core lead wire is included. For other output types, a 4-core lead wire is included.

How to Order Lead Wire Assembly with Connector

ZS – 38 – 3 L

❶

❶ Number of cores

3	3 cores, 1 output
4	4 cores, 2 outputs

3 How to Order Suction Cover Assembly

ZL112A – FC1 □ – A

❶

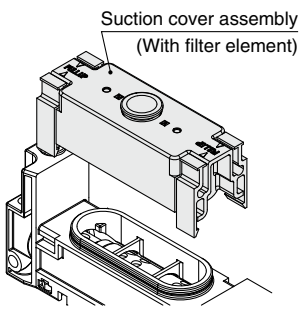

❶ Vacuum port size

Nil	Applicable tubing O.D. ø12
N	Applicable tubing O.D. ø1/2"

How to Order Replacement Parts

4 How to Order Silencer Case Assembly

ZL112A – SC1 – A

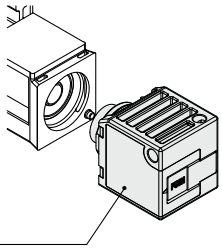

Silencer case assembly
(Including sound material assembly and a clip)

5 How to Order Port Block Assembly

ZL112A – EP1 □ – A

❶

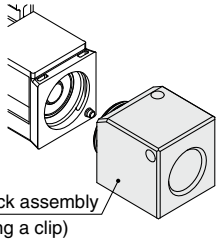

Port block assembly
(Including a clip)

❶ **Thread type**

Nil	Rc thread
F	G thread
N	NPT thread

6 How to Order Ejector Assembly

ZL112A – EJ1 – A

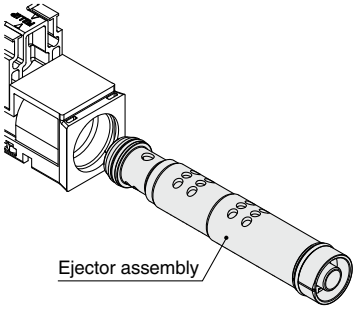

Ejector assembly

7 How to Order Valve Plate Assembly*1

ZL112A – VP 1 – A

❶

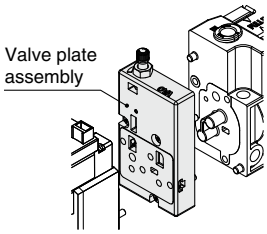

Valve plate assembly

❶ **Supply valve/Release valve combination**

1	Supply valve + Release valve
2	Supply valve only

*1 It is not possible to switch between models with valves and models without valves.

8 How to Order Filter Element

ZL112A – FE1 – A

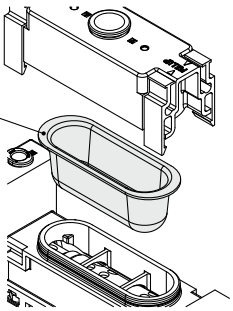

Filter element
* 1 pc.

9 How to Order Sound Absorbing Material Assembly

ZL112A – SE1 – A

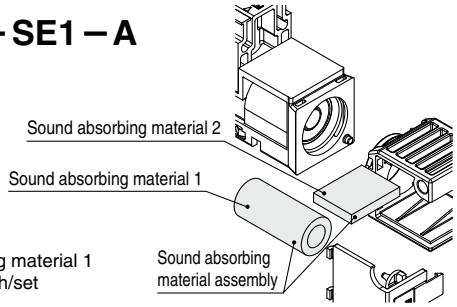

Sound absorbing material 2
Sound absorbing material 1
Sound absorbing material assembly

* Sound absorbing material 1 and 2, 1 pc. each/set

10 How to Order Adapter Assembly for Bottom Mounting

ZL112A – AD1 – A

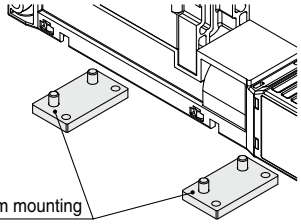

Adapter assembly for bottom mounting
* 2 pcs./set, with 4 bolts

How to Order Vacuum Port Adapter Assembly*2

ZL112A – AD2 – A

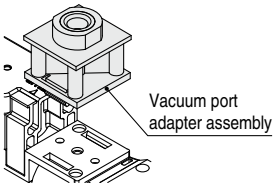

Vacuum port adapter assembly

*2 A vacuum port adapter cannot be installed when "Nil" is selected for the pressure sensor.

How to Order Pressure Gauge Assembly*3

ZL112A – PG 1 – A

❶

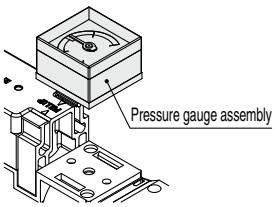

Pressure gauge assembly

❶ **Units for pressure**

1	kPa
2	inHg·psi*4

*4 Under the New Measurement Act, products with inHg·psi unit specifications are not permitted for use in Japan.

*3 A pressure gauge cannot be installed when "Nil" is selected for the pressure sensor.

How to Order O-ring for Suction Cover

ZL112A – OR1 – A

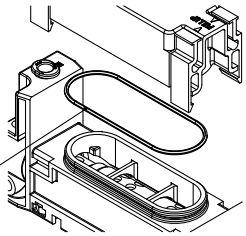

O-ring for suction cover
* 5 pcs./set

Dimensions

ZL112A(N) Without valve

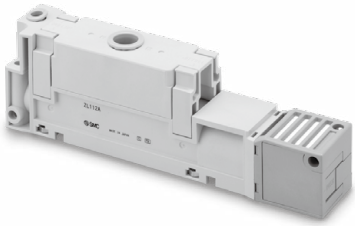

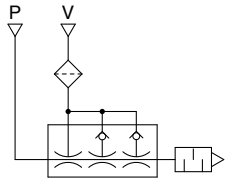

Circuit diagram

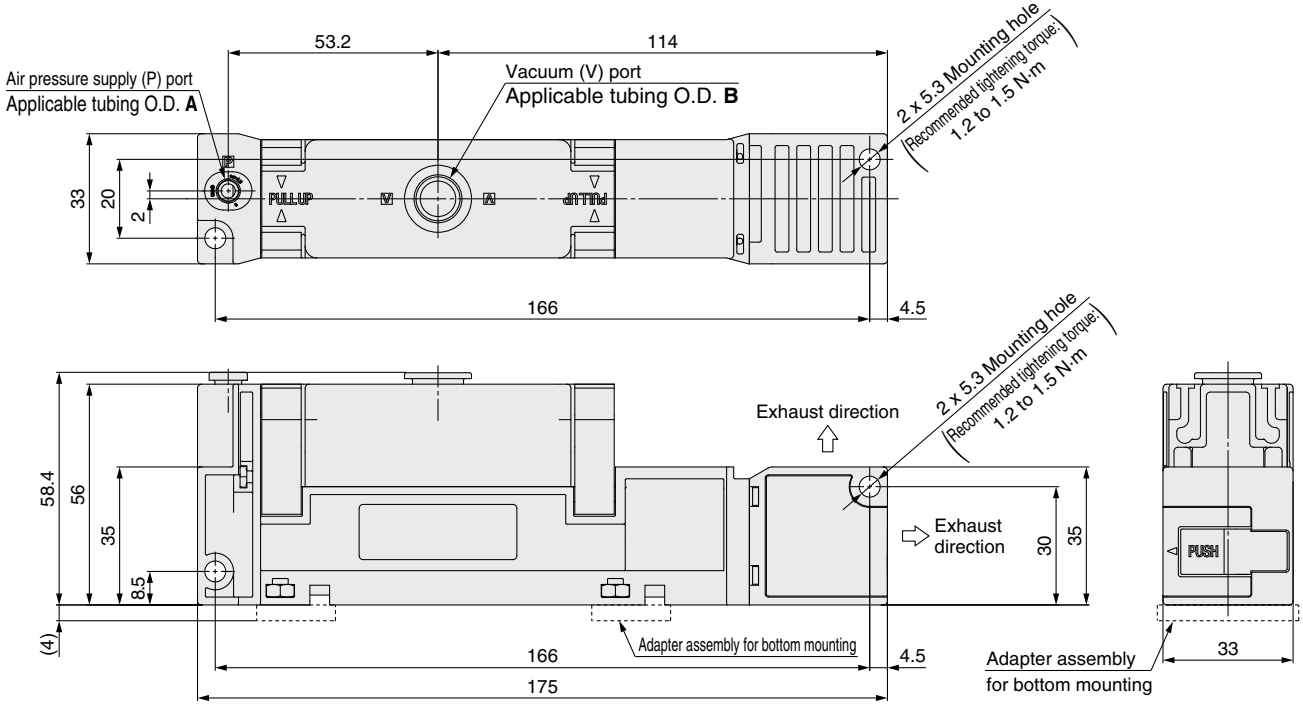

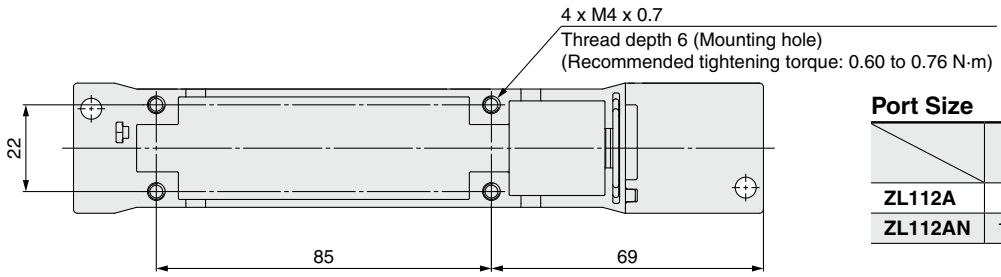

Port Size

	A	B
ZL112A	6	12
ZL112AN	1/4"	1/2"

Release Button

	P port		V port	
	Color	Type	Color	Type
ZL112A	Light gray	Oval	Light gray	Round
ZL112AN	Orange	Round	Orange	Round

Option

ZL112A(N)-B With adapter assembly for bottom mounting

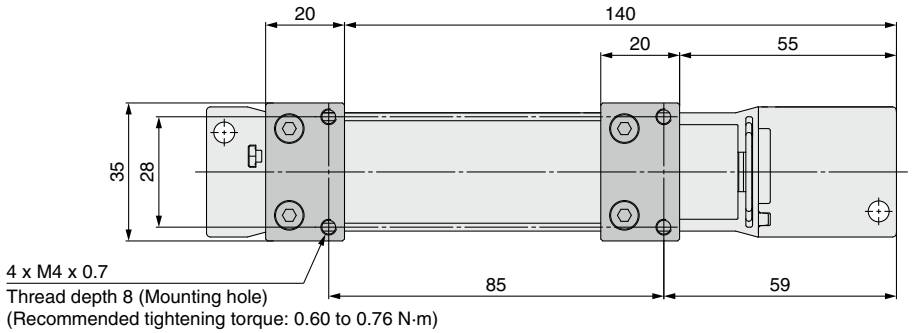

∗ Tighten to the recommended torque to mount the body. Tightening with excessive force may damage the product.

Dimensions

∗ Dimensions other than those shown below are the same as those of the type without a valve. Refer to the type without a valve on page 17 for details.

ZL112A-$^{K1}_{B1}$ □L□□ With valve (Supply valve and release valve)

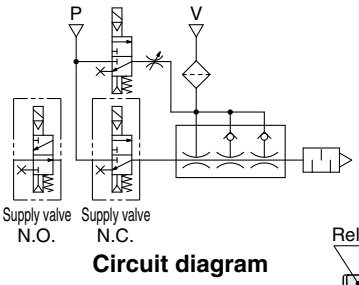

Circuit diagram

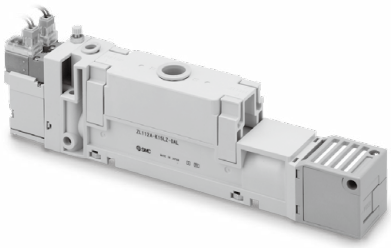

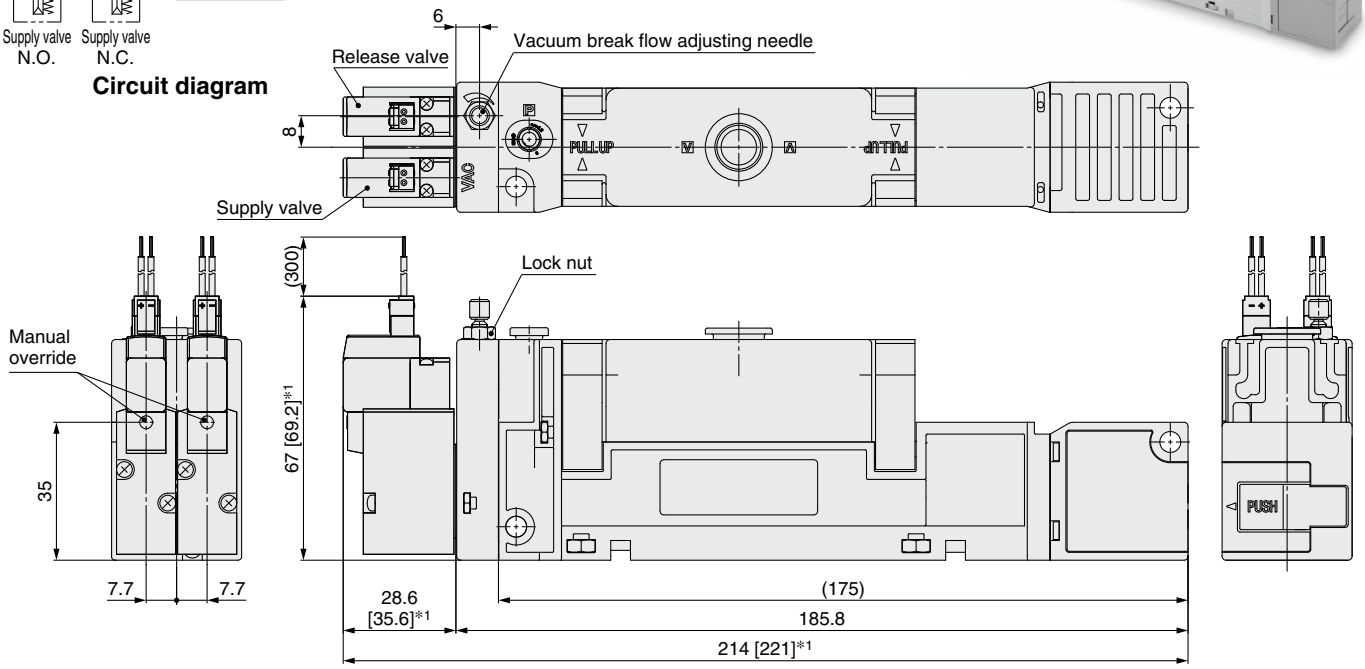

ZL112A-$^{K2}_{B2}$ □L□□ With valve (Supply valve)

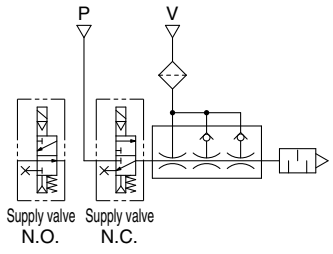

Circuit diagram

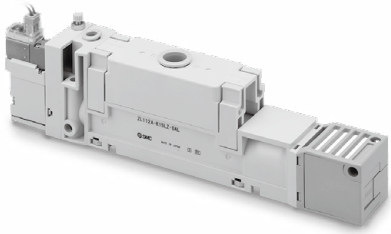

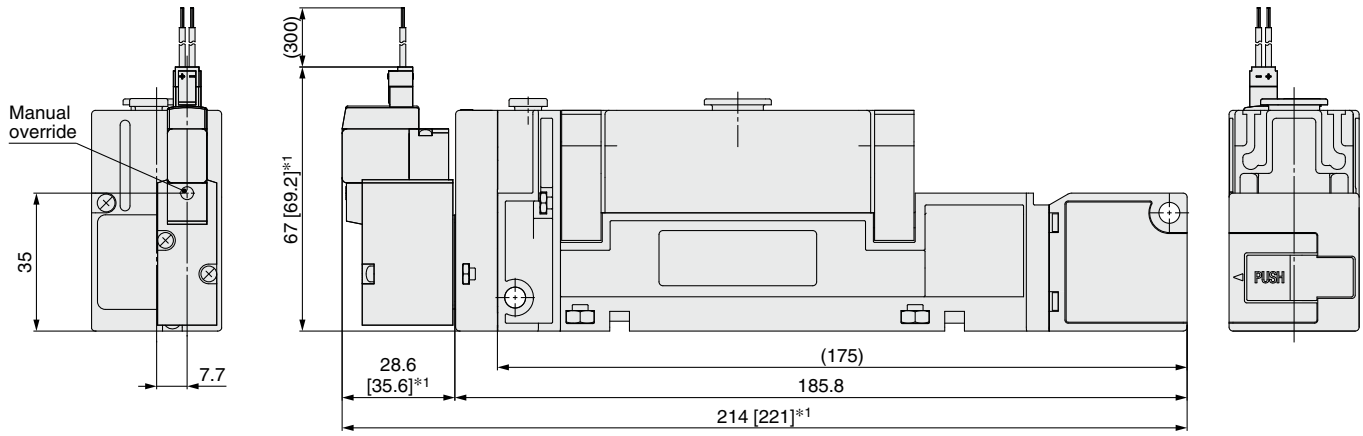

∗1 [ ] for AC

∗ Tighten to the recommended torque on pages 17 and 19 to mount the body. Tightening with excessive force may damage the product.

Dimensions

ZL112AP□ Port exhaust

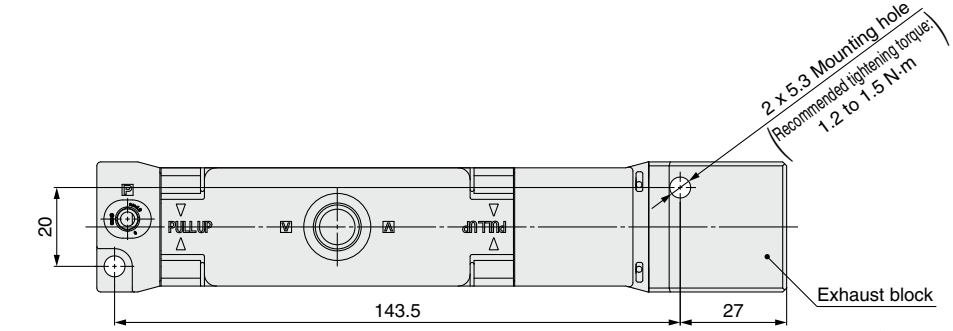

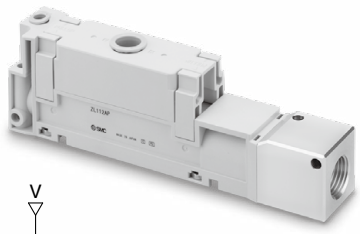

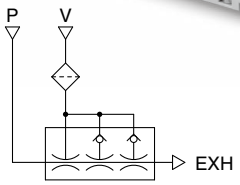

Circuit diagram

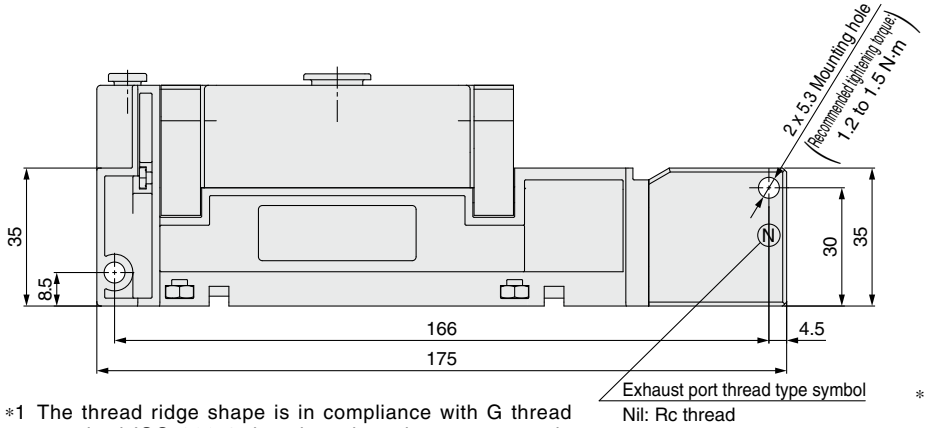

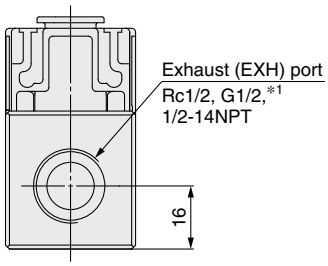

*1 The thread ridge shape is in compliance with G thread standard ISO 228-1, but the other shapes are not in compliance with ISO 16030 or ISO 1179.
Use a male thread with a length of 9 or less for connection.

* Hold the exhaust block when connecting piping to the exhaust port.
(Recommended tightening torque: 20 to 25 N·m)

ZL112A-D□□□ With vacuum pressure switch

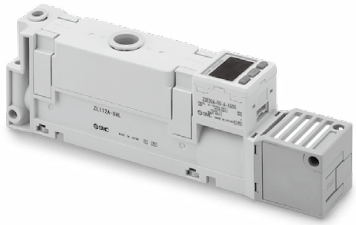

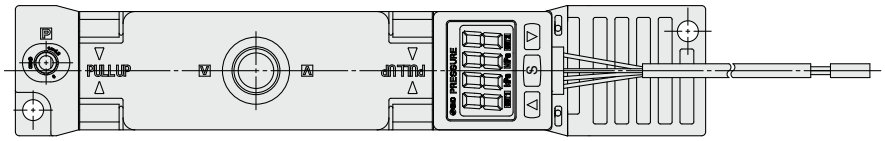

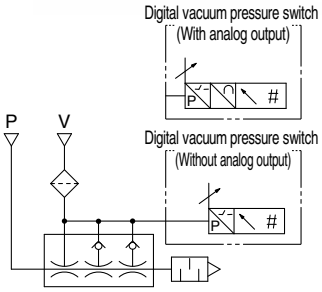

Circuit diagram

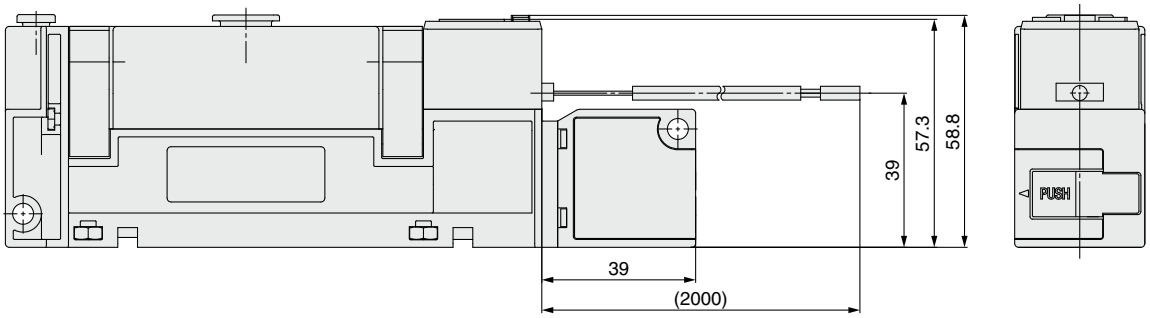

* Tighten to the recommended torque to mount the body.
Tightening with excessive force may damage the product.

Dimensions

Options

ZL112A-GN With vacuum pressure detection port

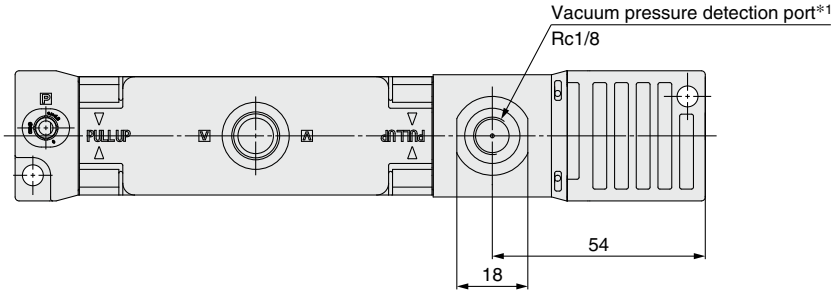

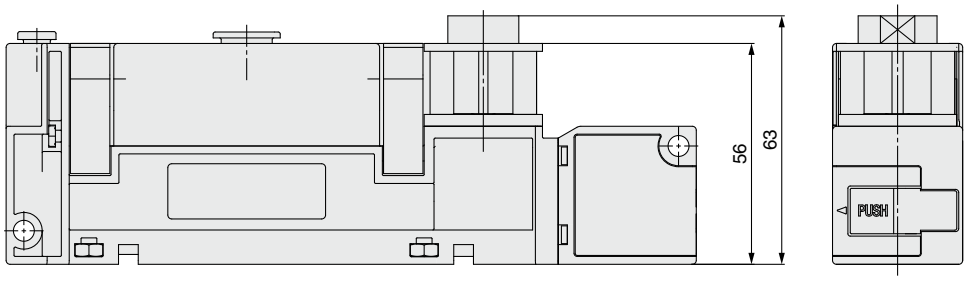

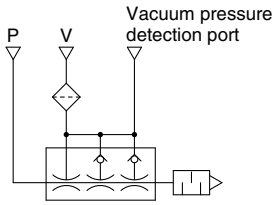

Circuit diagram

*1 Hold across the flats (18) when mounting a fitting to the vacuum pressure detection port. (Recommended tightening torque: 3 to 5 N·m)

ZL112A-G With pressure gauge

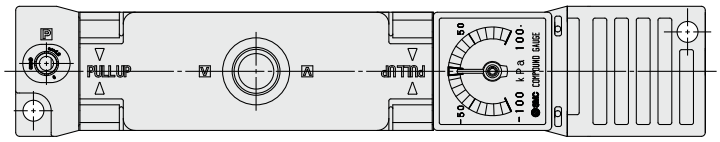

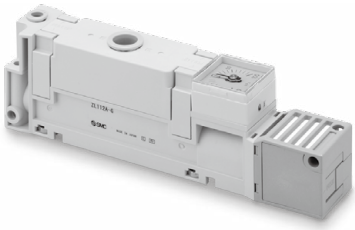

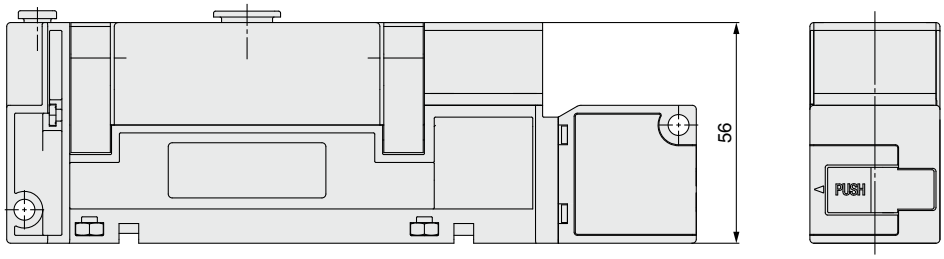

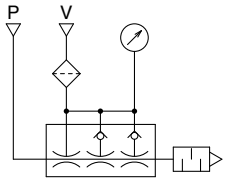

Circuit diagram

* Tighten to the recommended torque on pages 17 and 19 to mount the body. Tightening with excessive force may damage the product.

Multistage Ejector

Max. suction flow rate: 300 L/min (ANR) | **Max. suction flow rate: 600 L/min (ANR)**

ZL3/ZL6 Series

Only for the models with a valve or pressure switch

RoHS

How to Order

Without valve	ZL	3	M	06											–					–				
With valve	ZL	3	M	06		–	K1	5	LO	Z		–	E	A	M	G	–							
With pressure switch with energy saving function	ZL	3	M	06		–	K1	5	LO	Z		–	V	A	M		–							
		❶	❷	❸	❹		❺	❻	❼	❽	❾		❿	⓫	⓬	⓭								⓮
		Ejector					Supply valve/Release valve						Vacuum pressure sensor											ZL3 only

❶ Max. suction flow rate

3	300 L/min (ANR)*1
6	600 L/min (ANR)*1

*1 Branch specification + Port exhaust

❷ Standard supply pressure

M	0.35 MPa
H	0.50 MPa

❸ Vacuum (2/V) port size/ Supply (1/P) port applicable tubing O.D.

Symbol	Vacuum (2/V) port	Supply (1/P) port
06	Rc3/4	8 (Metric)
04	2 x Rc1/2 (Branch specification)	
F06	G3/4*2	
F04	2 x G1/2*2 (Branch specification)	
N06	NPT3/4	5/16" (Inch)
N04	2 x NPT1/2 (Branch specification)	

*2 The thread ridge shape is in compliance with G thread standard ISO 228-1, but the other shapes are not in compliance with ISO 16030 or ISO 1179.

❹ Exhaust method

Nil	Silencer exhaust
P	Port exhaust (Rc1, G1, NPT1)*3

*3 The same thread type selected for ❸ is used for the port.

❼ Electrical entry

L plug connector	M plug connector
L: Lead wire length 0.3 m 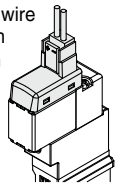	**M**: Lead wire length 0.3 m 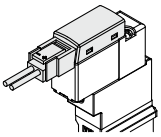
LO: Without connector*5 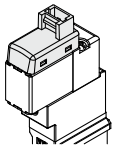	**MO**: Without connector 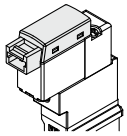

*5 Only "LO" is selectable when the pressure switch with energy saving function is selected.

❺ Supply valve/Release valve combination

		Without pressure switch with energy saving function	With pressure switch with energy saving function
K1	Supply valve (N.C.), Release valve (N.C.)*4	●	●
K2	Supply valve (N.C.)	●	—
B1	Supply valve (N.O.), Release valve (N.C.)	●	●
B2	Supply valve (N.O.)	●	—

*4 Only "K1" or "B1" is selectable when the pressure switch with energy saving function is selected.

❻ Rated voltage

5	24 VDC

❽ Light/Surge voltage suppressor

Z	With light/surge voltage suppressor

❾ Manual override

Nil	Non-locking push type
D	Push-turn locking slotted type
E	Push-turn locking lever type

❿ Vacuum pressure sensor

Nil	None
GN	With vacuum pressure detection (G) port (Rc1/8, G1/8, NPT1/8)*6
G	Pressure gauge*7
E	Vacuum pressure switch (Vacuum 2 outputs)
F	Vacuum pressure switch (Compound pressure 2 outputs)
V	Pressure switch for vacuum with energy saving function (Compound pressure 1 output)*8

*6 The same thread type selected for ❸ is used for the port.

*7 Not selectable when "F06" or "F04" is selected for ❸ When "06" or "04" is selected for ❸, the units of the pressure gauge are displayed in kPa. When "N06" or "N04" is selected, the units are displayed in inHg·psi (Under the New Measurement Act, products with these unit specifications are not permitted for use in Japan.).

*8 When "V" is selected, only "K1" or "B1" can be selected for ❺, and only "LO" can be selected for ❼.

Applicable only when "E," "F," or "V" is selected for ❿ Vacuum pressure sensor

⓫ Output

A	NPN open collector
B	PNP open collector

⓬ Unit

Nil	With unit switching function*9
M	SI unit only (kPa)
P	With unit switching function (Initial value psi)*9, *10

*9 Under the New Measurement Act, switches with the unit switching function are not permitted for use in Japan (implemented October 1999).

*10 When "V" is selected for ❿, "P" cannot be selected.

⓭ Lead wire

Nil	Without lead wire with connector
G	Lead wire with connector (Length: 2 m) (Included)
W	Lead wire for switch with energy saving function (Length: 2 m) (Included)

Only applicable to ZL3

⓮ Option

Nil	None
B	Adapter assembly for bottom mounting*11 (Included)

*11 This adapter assembly is for adjusting the product to the 27 mm pitch of the bottom mounting thread of the previous ZL212 series model.
This is required when replacing a previous bottom-mounted ZL212 series model. (2 pcs./set, with 4 bolts)
The mounting holes on the side are interchangeable as standard.

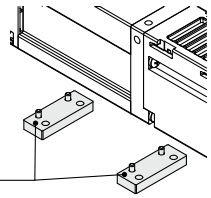

Multistage Ejector IO-Link Compatible

Max. suction flow rate: 300 L/min (ANR) | **Max. suction flow rate: 600 L/min (ANR)**

ZL3/ZL6 Series

RoHS

How to Order

With IO-Link compatible pressure switch

ZL 3 M 06 □ – K1 5 LO Z □ – E L M □ – □

❶ ❷ ❸ ❹ ❺ ❻ ❼ ❽ ❾ ❿ ⓫ ⓬ ⓭ ⓮

Ejector: ❶–❹ | Supply valve/Release valve: ❺–❾ | Vacuum pressure sensor: ❿–⓭ | ⓮ ZL3 only

❶ Max. suction flow rate

3	300 L/min (ANR)*1
6	600 L/min (ANR)*1

*1 Branch specification + Port exhaust

❷ Standard supply pressure

M	0.35 MPa
H	0.50 MPa

❸ Vacuum (2/V) port size/ Supply (1/P) port applicable tubing O.D.

Symbol	Vacuum (2/V) port	Supply (1/P) port
06	Rc3/4	8 (Metric)
04	2 x Rc1/2 (Branch specification)	
F06	G3/4*2	
F04	2 x G1/2*2 (Branch specification)	
N06	NPT3/4	5/16" (Inch)
N04	2 x NPT1/2 (Branch specification)	

*2 The thread ridge shape is in compliance with G thread standard ISO 228-1, but the other shapes are not in compliance with ISO 16030 or ISO 1179.

❹ Exhaust method

Nil	Silencer exhaust
P	Port exhaust (Rc1, G1, NPT1)*3

*3 The same thread type selected for ❸ is used for the port.

❺ Supply valve/Release valve combination

K1	Supply valve (N.C.), Release valve (N.C.)
B1	Supply valve (N.O.), Release valve (N.C.)

❻ Rated voltage

5	24 VDC

❽ Light/Surge voltage suppressor

Z	With light/surge voltage suppressor

❾ Manual override

Nil	Non-locking push type
D	Push-turn locking slotted type
E	Push-turn locking lever type

❼ Electrical entry

L plug connector

LO: Without connector

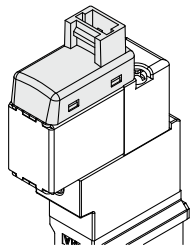

❿ Vacuum pressure sensor

Symbol	Pressure range [kPa]	Energy saving function
E	0 to –101	—
F	–100 to 100	—
V		○

⓫ Output

L	IO-Link

⓬ Unit

Nil	With unit switching function*4
M	SI unit only (kPa)

*4 Under the New Measurement Act, switches with the unit switching function are not permitted for use in Japan (implemented October 1999).

⓭ Lead wire

Nil	Without lead wire with connector
H	Lead wire with connector for IO-Link (With M12 connector): 300 mm (Included)

Only applicable to ZL3

⓮ Option

Nil	None
B	Adapter assembly for bottom mounting*5 (Included)

*5 This adapter assembly is for adjusting the product to the 27 mm pitch of the bottom mounting thread of the previous ZL212 series model.
This is required when replacing a previous bottom-mounted ZL212 series model. (2 pcs./set, with 4 bolts)
The mounting holes on the side are interchangeable as standard.

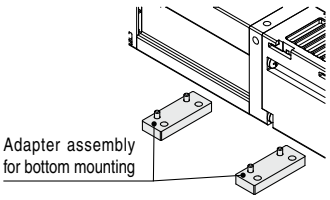

Without valve

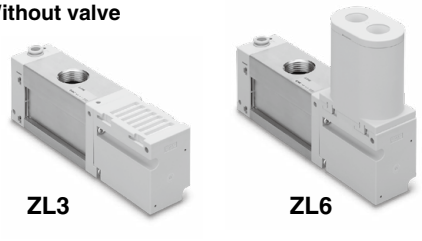

Branch

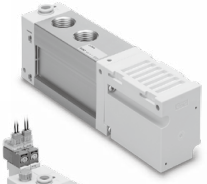

With valve

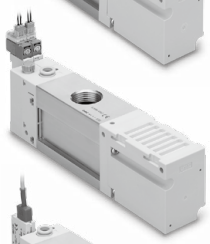

With pressure switch

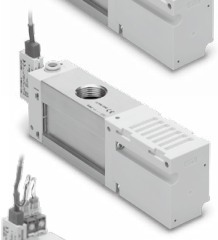

Pressure switch for vacuum with energy saving function

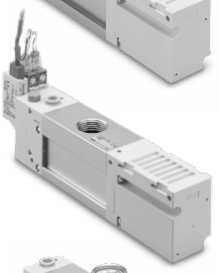

With pressure gauge

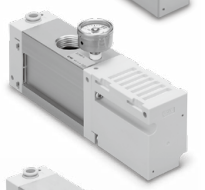

With vacuum pressure detection port

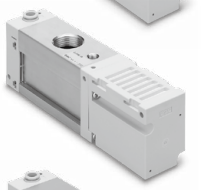

Port exhaust

∗ The solenoid valve mounted on this product is the SMC 5-port solenoid valve JSY3000 series.

For details on solenoid valve functions, refer to the Operation Manual of the JSY3000 series on the SMC website (https://www.smcworld. com).

5-port solenoid valve
JSY3000 series

(ZL3-) JSY3140 - 5 □ Z □

Multistage ejector
ZL$^{3}_{6}$ series

ZL$^{3}_{6}$□□□-□ 5 □ Z □-□□□□-□

- Manual override
- Electrical entry

Refer to page 30.

Ejector Specifications

ZL3

Model		ZL3M□□	ZL3H□□
Nozzle size [mm]		1.9	1.5
Standard supply pressure [MPa]		0.35	0.50
Max. vacuum pressure [kPa]∗1		−91	−93
Max. suction flow rate [L/min (ANR)]		280	
	Branch/Port exhaust	300	
Air consumption [L/min (ANR)]		150	135
Supply pressure range [MPa]		0.2 to 0.6	
Operating temperature range [°C]		−5 to 50 (No freezing or condensation)	
Fluid		Air	
Vibration resistance [m/s²]∗2		20	
Impact resistance [m/s²]∗3		100	

∗1 Values are at the standard supply pressure and based on SMC's measurement standards. They depend on atmospheric pressure (weather, altitude, etc.) and the measurement method.
∗2 10 to 500 Hz for 2 hours in each direction of X, Y, and Z (De-energized, Initial value)
∗3 3 times in each direction of X, Y, and Z (De-energized, Initial value)

ZL6

Model		ZL6M□□	ZL6H□□
Nozzle size [mm]		1.9 x 2	1.5 x 2
Standard supply pressure [MPa]	Without valve	0.35	0.50
	With valve	0.37	0.52
Max. vacuum pressure [kPa]∗1		−91	−93
Max. suction flow rate [L/min(ANR)]		580	
	Branch/Port exhaust	600	
Air consumption [L/min(ANR)]		300	270
Supply pressure range [MPa]		0.2 to 0.6	
Operating temperature range [°C]		−5 to 50 (No freezing or condensation)	
Fluid		Air	
Vibration resistance [m/s²]∗2		20	
Impact resistance [m/s²]∗3		100	

∗1 Values are at the standard supply pressure and based on SMC's measurement standards. They depend on atmospheric pressure (weather, altitude, etc.) and the measurement method.
∗2 10 to 500 Hz for 2 hours in each direction of X, Y, and Z (De-energized, Initial value)
∗3 3 times in each direction of X, Y, and Z (De-energized, Initial value)

Supply Valve/Release Valve Specifications

Model	ZL3-JSY3140
Response time (at 0.5 MPa)	27 ms or less∗1
Max. operating frequency	5 Hz
Manual override	Non-locking push type, Push-turn locking slotted type, Push-turn locking lever type
Rated coil voltage	24 VDC
Allowable voltage range	Rated voltage ±10%
Power consumption	0.4 W

∗1 Based on JIS B 8419: 2010 dynamic performance test (Coil temperature 20°C, at rated voltage)
∗2 Refer to the **Web Catalog** for details on the JSY3000 series.

Pressure Gauge Specifications

Model	GZ33-K1K-01-X56	GZ33-P1C-N01-X55
Pressure unit	kPa	inHg/psi dual scale
Pressure range	−100 to 100 kPa	−30 inHg to 14 psi
Connection thread	R1/8	NPT1/8
Accuracy	Vacuum ±3% F.S., Positive pressure ±5% F.S.	
Weight	30 g	

Noise Level (Reference values)

Model	ZL3	ZL6
Noise level [dB(A)]	68	

Actual values under SMC's measurement conditions (Not guaranteed values)

Weight

[g]

Model	ZL3	ZL6
Basic type	390	470
Port exhaust	+80	+25
Vacuum pressure switch (Excluding lead wire)	+20	+20
Lead wire with connector for vacuum pressure switch	+45	+45
Lead wire with connector for pressure switch with energy saving function	+50	+50
Lead wire with connector for IO-Link	+20	+20
With supply valve and release valve	+120	+120
With supply valve and without release valve	+80	+80
With pressure gauge	+30	+30
With adapter assembly for bottom mounting	+60	—

Vacuum Pressure Switch Specifications

Model		ZSE10		
		Vacuum pressure switch	Compound pressure switch	Pressure switch for vacuum with energy saving function
Rated pressure range		0 to –101 kPa	–100 to 100 kPa	
Set pressure range/Display pressure range		10 to –101 kPa	–105 to 105 kPa	
Withstand pressure		500 kPa		
Smallest settable increment		0.1 kPa		
Applicable fluid		Air, Non-corrosive gas, Non-flammable gas		
Power supply voltage		12 to 24 VDC ±10%, Ripple (p-p) 10% or less (with power supply polarity protection)		
Current consumption		40 mA or less		
Switch output		NPN or PNP open collector 2 outputs (selectable)		NPN or PNP open collector OUT1: General purpose OUT2: Valve control
	Max. load current	80mA		
	Max. applied voltage	28 V (at NPN output)		26.4 V (at NPN output)
	Residual voltage	2 V or less (with load current of 80 mA)		
	Response time	2.5 ms or less (with anti-chattering function: 20, 100, 500, 1000, 2000 ms)		
	Short-circuit protection	Yes		
Repeatability		±0.2% F.S. ±1 digit		
Hysteresis	**Hysteresis mode**	Variable (0 or above)*1		
Hysteresis	**Window comparator mode**	Variable (0 or above)*1		—
Display		3 1/2 digit, 7-segment LED, 1-color display (Red)		
Display accuracy		±2% F.S. ±1 digit (Ambient temperature of 25 ±3°C)		
Indicator light		Lights up when switch output is turned ON. OUT1: Green, OUT2: Red		
Environmental resistance	**Enclosure**	IP40		
Environmental resistance	**Operating temperature range**	Operating: –5 to 50°C Stored: –10 to 60°C (No freezing or condensation)		
Environmental resistance	**Operating humidity range**	Operating/Stored: 35 to 85% RH (No condensation)		
Environmental resistance	**Withstand voltage**	1000 VAC for 1 min between terminals and housing		
Environmental resistance	**Insulation resistance**	50 MΩ or more (500 VDC measured via megohmmeter) between terminals and housing		
Temperature characteristics		±2% F.S. ±1 digit (at 25°C in an ambient temperature of –5 and 50°C)		
Lead wire		Oilproof heavy-duty vinyl cable 5 cores Conductor area: 0.15 mm² (AWG26) Insulator O.D.: 1.0 mm		
Standards		CE/UKCA, RoHS compliant		

*1 If the applied pressure fluctuates around the set value, the hysteresis must be set to a value more than the fluctuating width. Otherwise, chattering will occur.

* **The vacuum pressure switch mounted on this product is equivalent to our SMC product, the ZSE10 series compact digital pressure switch.**

For details on compact digital pressure switch functions, refer to the Operation Manual of the ZSE10 series on the SMC website (https://www.smcworld.com).

● **Pressure switch correspondence table**

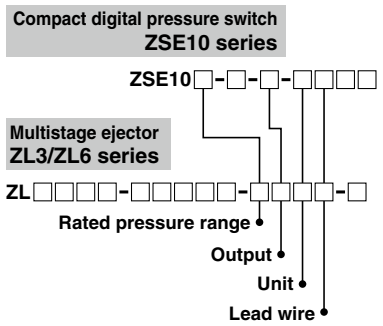

* Excludes the pressure switch with energy saving function and IO-Link compatible pressure switch

IO-Link Compatible Vacuum Pressure Switch Specifications

IO-Link Compatible Vacuum Pressure Switch (For details, refer to the **ZL3-VP□-1-□L□□-A** operation manual on the SMC website.)

Model		ZSE10	
		For vacuum pressure	For compound pressure (Includes energy saving function)
Rated pressure range		0 to –101 kPa	–100 to 100 kPa
Set pressure range		10 to –105 kPa	–105 to 105 kPa
Proof pressure		500 kPa	
Smallest settable increment		0.1 kPa	
Power supply voltage		24 VDC ±10%, Ripple (p-p) 10% or less (with power supply polarity protection)	
Current consumption		40 mA	
Switch output	**Output type**	PNP open collector OUT1, OUT2: For valve control	
	Residual voltage	2 V or less (with load current of 80 mA)	
	Short-circuit protection	Yes	
Repeatability		±0.2% F.S. ±1 digit	
Hysteresis		Variable (0.1 or above)	
Display		3 1/2 digit, 7-segment LED, 1-color display (Red)	
Display accuracy		±2% F.S. ±1 digit (Ambient temperature of 25 ±3°C)	
Indicator light		Lights up when solenoid valve output is turned ON. Release valve output (OUT1): Green, Supply valve output (OUT2): Red	
Digital filter		Variable from 0 to 10 s (0.01 s increments)	
Environmental resistance	**Enclosure**	IP40	
	Withstand voltage	1000 VAC for 1 min between terminals and housing	
	Insulation resistance	50 MΩ or more (500 VDC measured via megohmmeter) between terminals and housing	
	Operating temperature range	Operating: –5 to 50°C, Stored: –10 to 60°C (No condensation or freezing)	
	Operating humidity range	Operating/Stored: 35 to 85% RH (No condensation)	
Temperature characteristics		±2% F.S. (25°C standard)	
Lead wire		Cable 3 cores, ø3.4, 300 mm Valve connector lead wire Insulator O.D.: 1.5 mm, 100 mm	

Internal Circuits and Wiring Examples

■ Vacuum pressure switch

NPN (2 outputs)

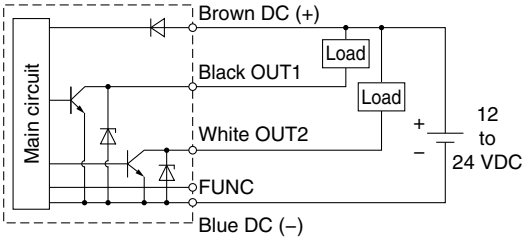

Max. 28 V, 80 mA
Residual voltage 2 V or less

PNP (2 outputs)

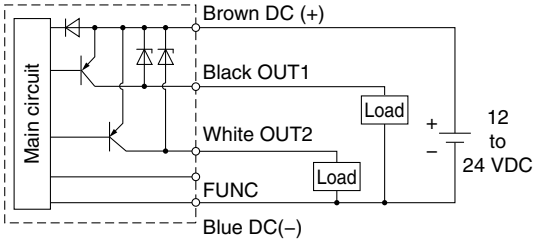

Max. 80 mA
Residual voltage 2 V or less

∗ The FUNC terminal is connected when using the copy function.
(For details, refer to the Operation Manual for the ZSE10/ISE10 on the SMC website.)

■ Pressure switch for vacuum with energy saving function

NPN (1 output)

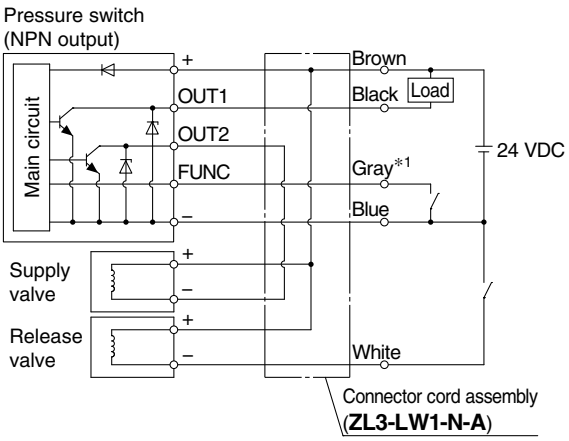

PNP (1 output)

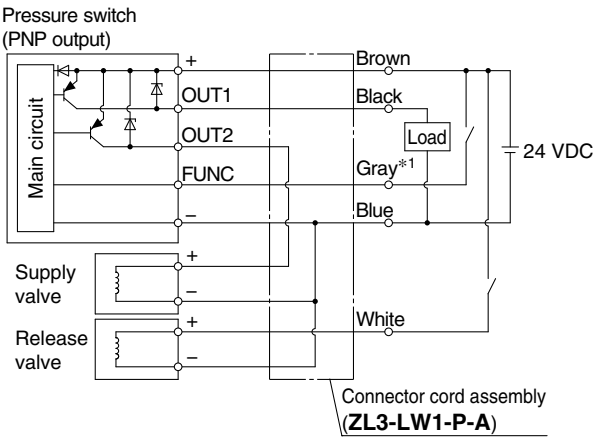

∗1 The gray wire (FUNC) is connected when operating the supply valve by energy saving control (for workpiece adsorption).
(For details, refer to the Operation Manual for the ZSE10 (For ZL3, ZL6 series) on the SMC website.)

■ IO-Link compatible pressure switch

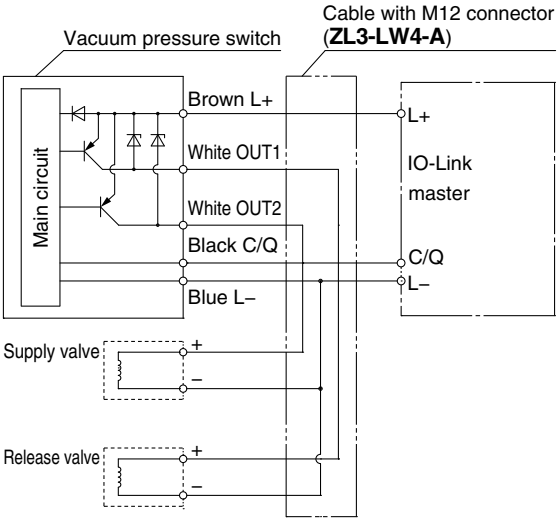

IO-Link: Process Data

Relationship between the process data and pressure value

ZL3-VP$\frac{1}{2}$-1-EL□□-A (For 0 to –101 kPa)

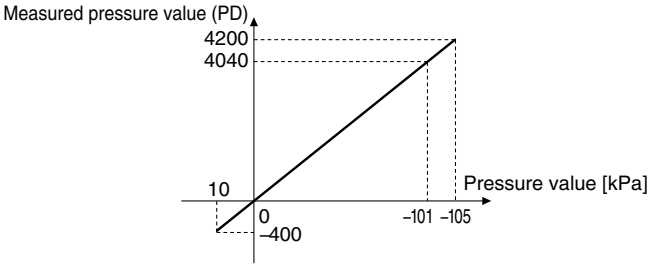

ZL3-VP$\frac{1}{2}$-1-FL□□-A (For –100 to 100 kPa)

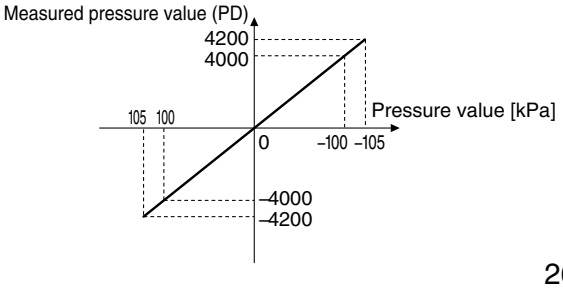

Exhaust Characteristics (Representative value)

ZL3H

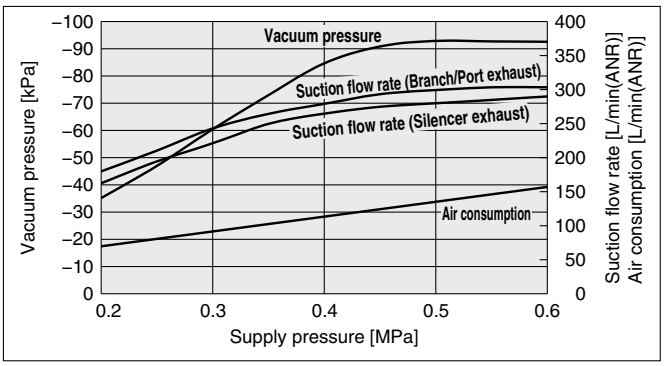

ZL3M

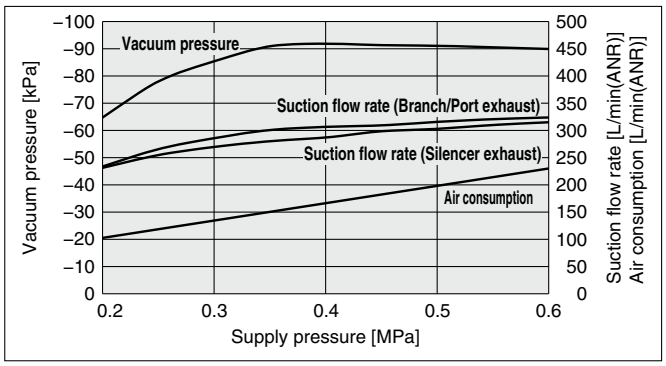

ZL6H

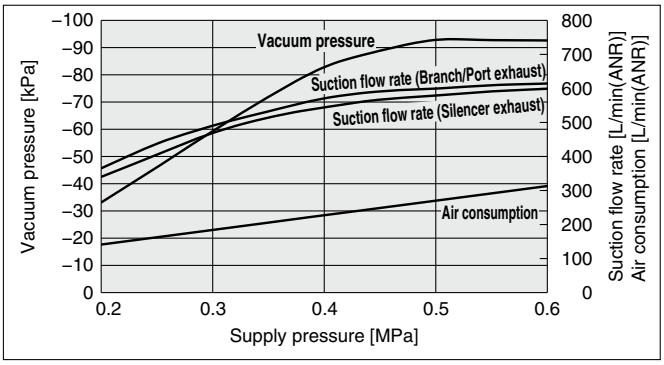

ZL6M

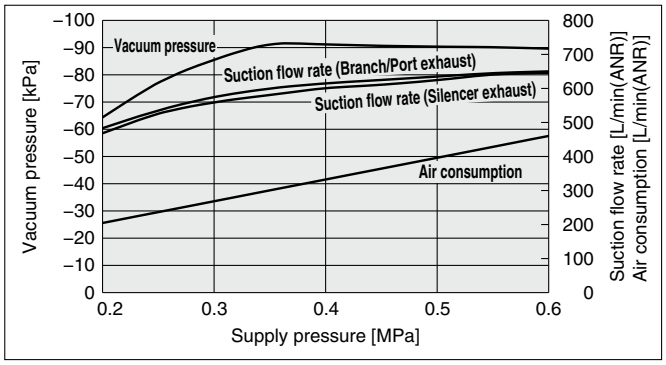

ZL6H (With valve)

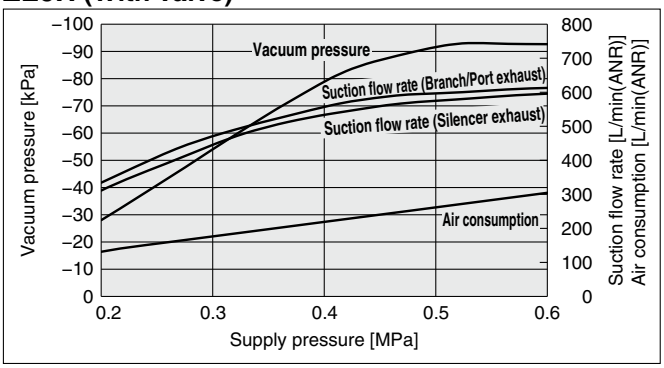

ZL6M (With valve)

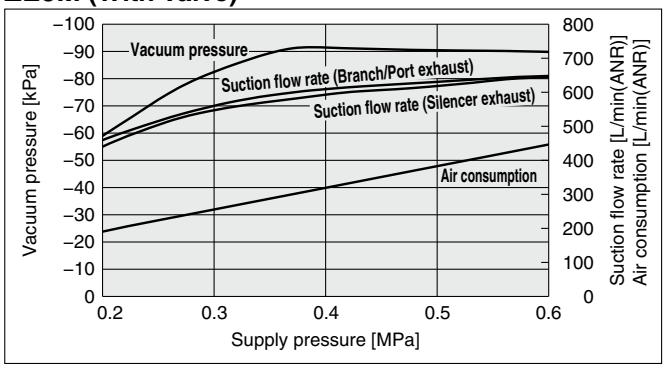

Flow Rate Characteristics (Representative value)

ZL3H (04P)

Supply pressure: 0.5 MPa

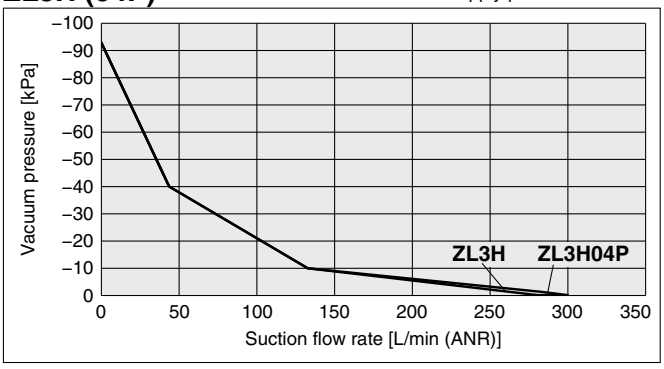

ZL3M (04P)

Supply pressure: 0.35 MPa

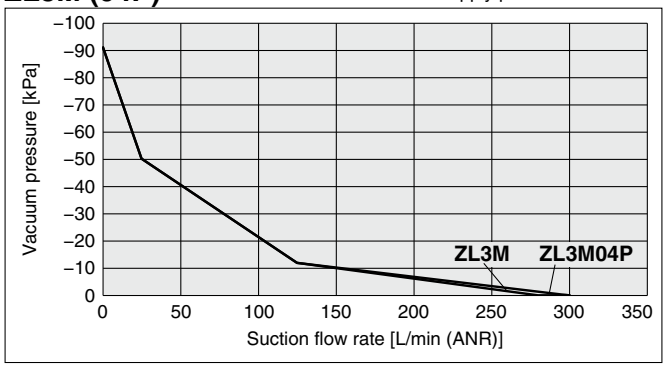

Flow Rate Characteristics (Representative value)

ZL6H (04P)

Supply pressure: 0.5 MPa/0.52 MPa (With valve)

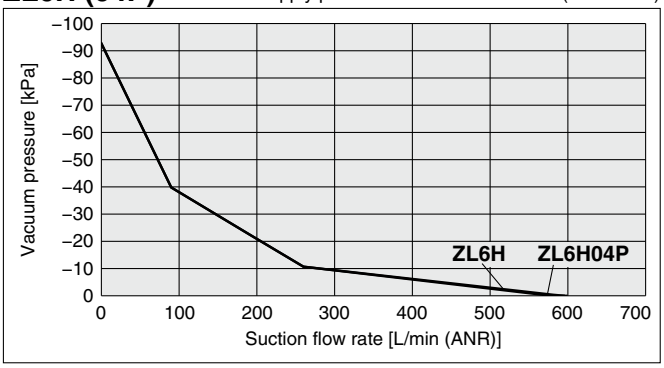

ZL6M (04P)

Supply pressure: 0.35 MPa/0.37 MPa (With valve)

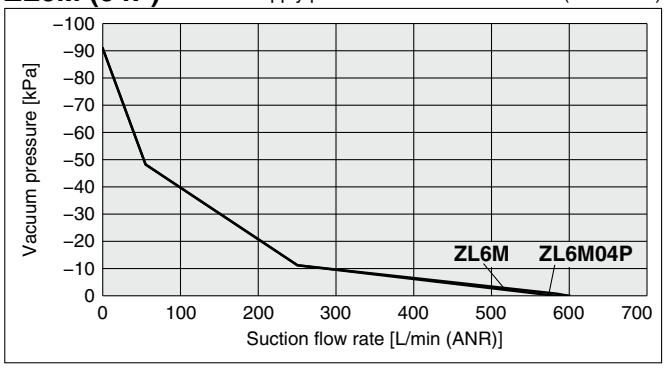

Time to Reach Vacuum (Representative value)

ZL3□

(Tank capacity: 1 L)

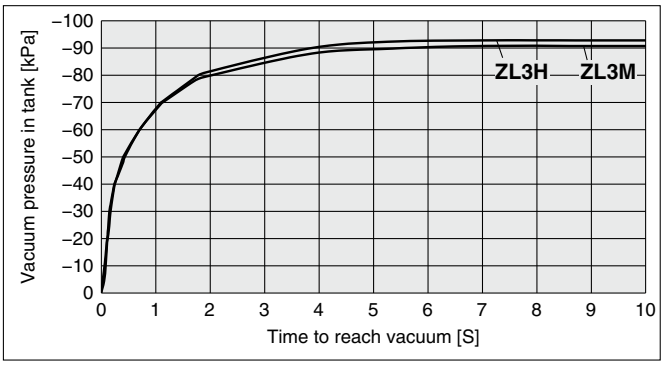

ZL6□

(Tank capacity: 1 L)

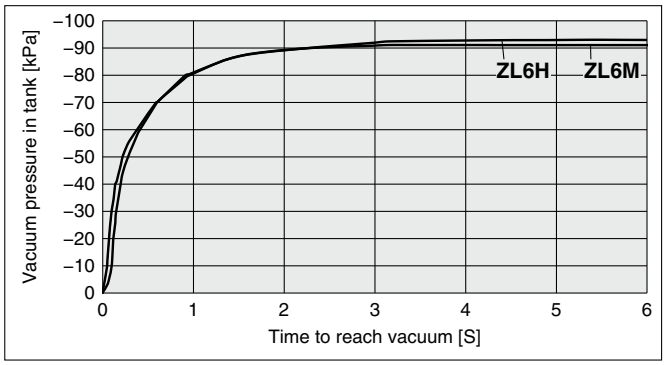

Break Flow Rate Characteristics (Representative value)

Break flow rate supplied to vacuum area at different needle openings and at each supply pressure

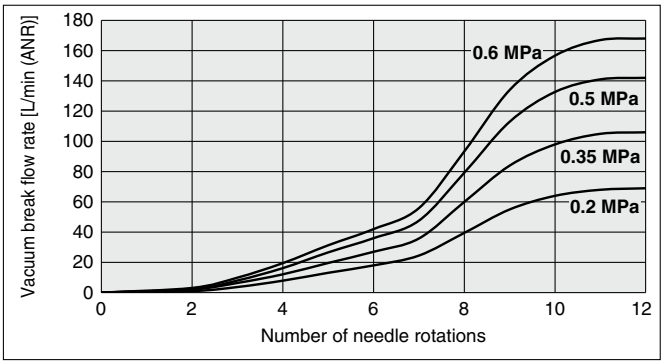

* The flow rate is not the flow rate output from the vacuum port. The break flow rate is also output on the exhaust side of the product, and the output flow rate from the vacuum port fluctuates depending on the piping conditions of the vacuum port.

Vacuum Breaking Time (Representative value)

Max. vacuum pressure → Time to reach -10 kPa

(Tank capacity: 1 L)

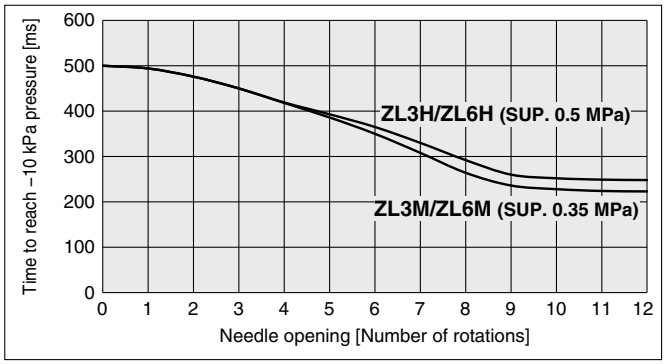

How to Read the Flow Rate Characteristics

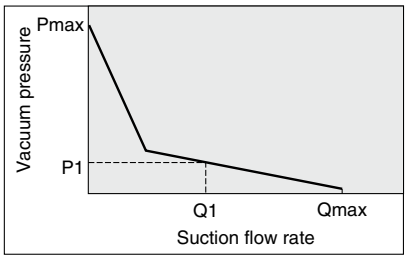

The flow rate characteristics indicate the relationship between the vacuum pressure and the suction flow rate of the ejector. They also show that when the suction flow rate changes, the vacuum pressure also changes. In general, this indicates the relationship at the ejector's standard operating pressure.

In the graph, Pmax indicates the max. vacuum pressure, and Qmax indicates the max. suction flow rate. These are the values that are published as specifications in catalogs, etc. Changes in vacuum pressure are explained below.

1. If the ejector's suction port is closed and sealed tight, the suction flow rate becomes "0," and the vacuum pressure increases to the max. (Pmax).
2. If the suction port is opened and air is allowed to flow (the air leaks), the suction flow rate increases, and the vacuum pressure decreases. (The condition of P1 and Q1)
3. If the suction port is opened completely, the suction flow rate increases to the max. (Qmax), while the vacuum pressure then drops almost to "0" (atmospheric pressure). When adsorbing workpieces which are permeable, subject to leakage, etc., caution is required as the vacuum pressure will not be very high.

How to Read the Time to Reach Vacuum

The graphs indicate the time required to reach a vacuum pressure determined by adsorption conditions for workpieces, etc., starting from atmospheric pressure in a 1 L sealed tank. For the ZL3H, approximately 4.0 seconds are necessary to attain a vacuum pressure of –90 kPa.

Construction

ZL3
Without valve or pressure switch, Silencer exhaust

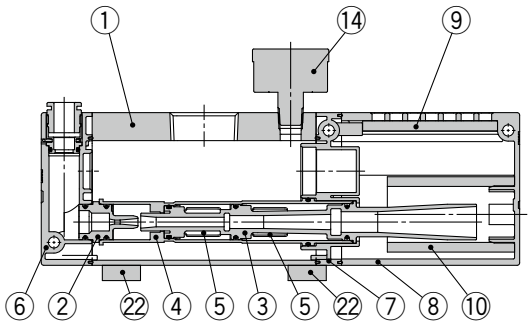

ZL3
With valve and pressure switch, Port exhaust

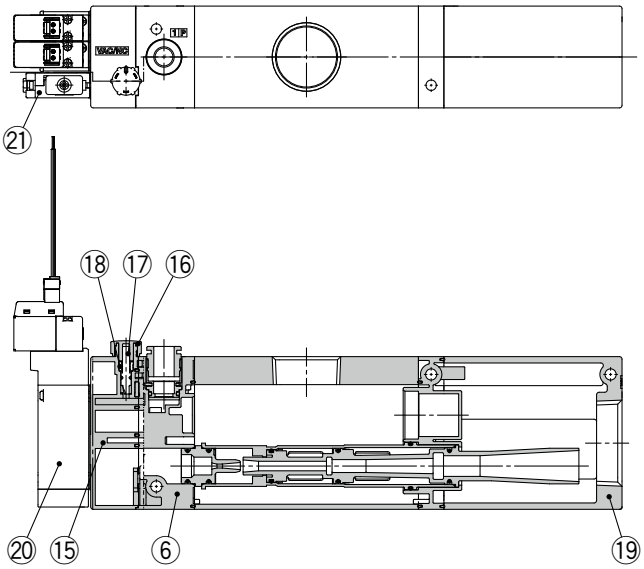

ZL6
Without valve or pressure switch, Silencer exhaust

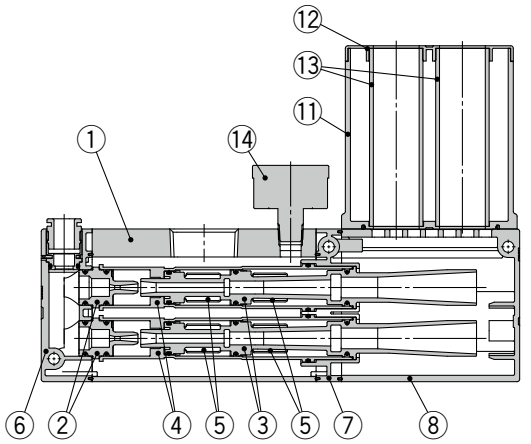

ZL6
With valve and pressure switch, Port exhaust

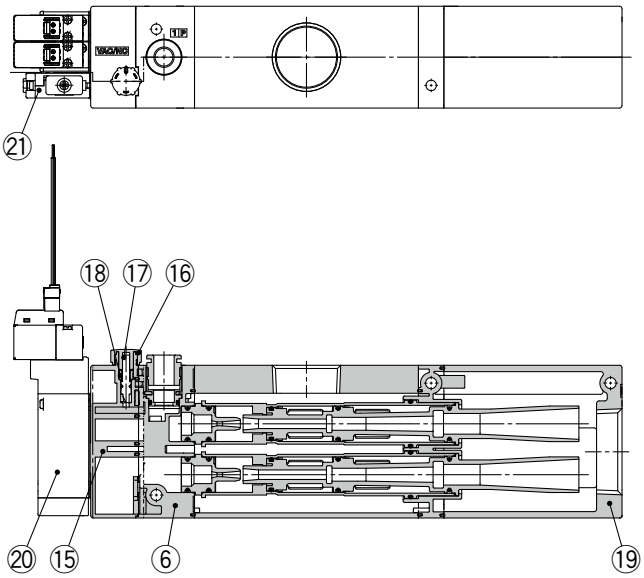

Component Parts

No.	Description	Material	Note
1	**Body**	Aluminum alloy (Anodized)	—
2	**Nozzle**	POM	Refer to 2 on page 30 for replacement parts.
3	**Diffuser**	PBT	
4	**Attachment**	POM	
5	**Check valve**	FKM	
6	**Front adapter**	PBT	—
7	**End adapter**	PBT	—
8	**Silencer case 1**	PBT	Refer to 3 on page 30 for replacement parts.
9	**Sound absorbing material 1**	Resin	Refer to 4 on page 30 for replacement parts.
10	**Sound absorbing material 2**	Non-woven fabric	
11	**Silencer case 2**	PBT	Refer to 5 on page 30 for replacement parts.
12	**Silencer cap**	POM	
13	**Sound absorbing material 3**	Non-woven fabric	(Disassembly is not possible. The silencer assembly must be replaced.)

No.	Description	Material	Note
14	**Pressure gauge**	—	Refer to 7 on page 30 for replacement parts.
15	**Valve plate**	PBT	—
16	**Knob**	POM	—
17	**Needle**	PBT	—
18	**Needle guide**	Brass (Electroless nickel plating)	—
19	**Exhaust block**	Aluminum alloy (Chromated, Painted)	Refer to 6 on page 30 for replacement parts.
20	**Supply valve, Release valve**	—	Refer to 1 on page 30 for replacement parts.
21	**Vacuum pressure switch**	—	—
22	**Adapter assembly for bottom mounting**	Brass (Electroless nickel plating)	Refer to 8 on page 30 for replacement parts.
—	**Seal material (O-ring, etc.)**	HNBR/NBR	—
—	**Screws for assembly**	Steel (Trivalent chromated)	—

How to Order Replacement Parts

1 How to Order Supply Valve/Release Valve (For ZL3/ZL6)

ZL3 – JSY3140 – 5 L Z □ – □

Rated voltage 24 VDC ❶ ❷ ❸

With light/surge voltage suppressor

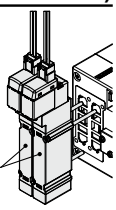

❶ **Electrical entry**

L plug connector		M plug connector	
L	**LO**	**M**	**MO**
L: With lead wire (300 mm)	**LO**: Without connector	**M**: With lead wire (300 mm)	**MO**: Without connector

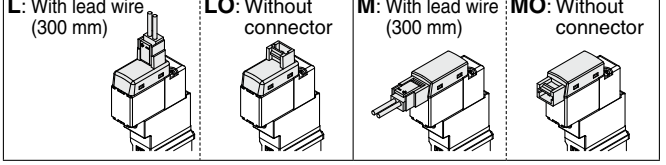

❷ **Manual override**

Nil: Non-locking push type	**D**: Push-turn locking slotted type	**E**: Push-turn locking lever type

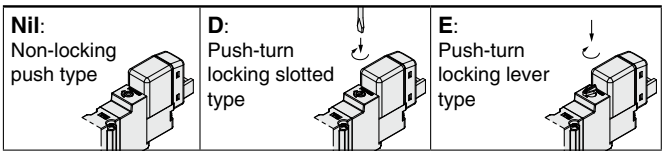

❸ **Supply valve/Release valve**

Nil	Supply valve
X12	Release valve

How to Order Lead Wire with Connector Assembly for Supply Valve/Release Valve (For ZL3/ZL6)

SY100 – 30 – 4 A – 6

Rated voltage 24 VDC ❶

Lead wire assembly with connector for supply valve and release valve

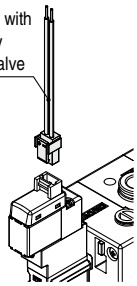

❶ **Lead wire length**

Nil	300 mm	**20**	2000 mm
6	600 mm	**25**	2500 mm
10	1000 mm	**30**	3000 mm
15	1500 mm	**50**	5000 mm

How to Order Connector and Socket for Supply Valve/Release Valve (For ZL3/ZL6)

SY100 – 30 – A

∗ With connector and 2 sockets only

How to Order Lead Wire with Connector for Vacuum Pressure Switch (For ZL3/ZL6)

(When an individual lead wire is necessary, order with the part number below.)

- **Lead wire with connector for vacuum pressure switch**

ZS – 39 – 5G

Lead wire with connector for vacuum pressure switch

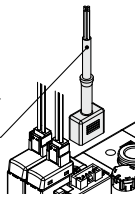

- **Lead wire with connector for switch with energy saving function**

ZL3 – LW1 – N – A

❶

Lead wire with connector for switch with energy saving function

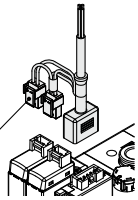

❶ **Output**

N	NPN open collector
P	PNP open collector

⚠ Note that the vacuum pressure switch cannot be replaced.

- **Lead wire with connector for IO-Link compatible vacuum pressure switch (With M12 connector)**

ZL3 – LW4 – A

2 How to Order Ejector Assembly (For ZL3/ZL6)

ZL3 – EJ1 – H □ – A

❶ ❷

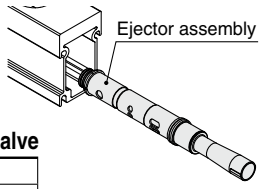

❶ **Standard supply pressure**

M	0.35 MPa
H	0.50 MPa

❷ **1-stage check valve**

Nil	None
V	Yes

A 1-stage check valve is required for specifications with pressure switches with an energy saving function.

3 How to Order Silencer Assembly (With sound absorbing material) (For ZL3)

ZL3 – SC1 – A

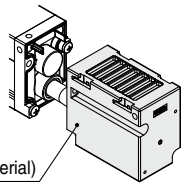

4 How to Order Sound Absorbing Material Assembly (For ZL3)

ZL3 – SE1 – A

∗ Sound absorbing material 1 and 2, 1 pc. each/set

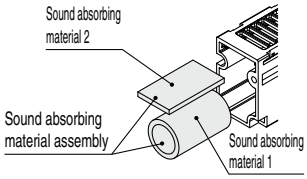

5 How to Order Silencer Assembly (With sound absorbing material) (For ZL6)

ZL6 – SC1 – A

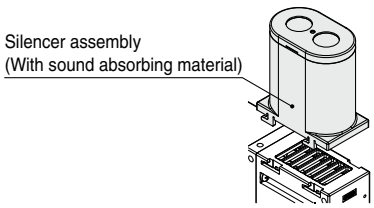

6 How to Order Exhaust Block Assembly (For ZL3/ZL6)

ZL3 – EP1 – 1 □ – A

❶

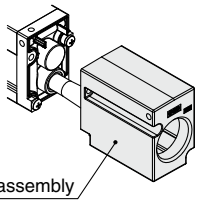

❶ **Thread type**

Nil	Rc thread
F	G thread
N	NPT thread

7 How to Order Pressure Gauge (For ZL3/ZL6)

GZ33 – K1K – 01 – X56
(Displayed in kPa)

GZ33 – P1C – N01 – X55
(Displayed in inHg·psi)∗1

∗1 Under the New Measurement Act, products with inHg·psi unit specifications are not permitted for use in Japan.

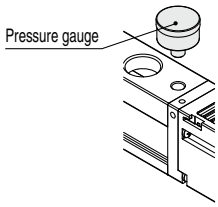

8 How to Order Adapter Assembly for Bottom Mounting (For ZL3)

ZL3 – AD3 – A

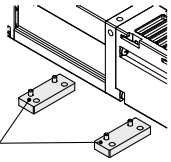

∗ 2 pcs./set, with 4 bolts

How to Order Replacement Parts

9 Vacuum Pressure Switch Replacement Assembly

For the type without a valve

ZL3−AD1−2[ ]−[EA][M][G]−A

❶ ❷ ❸ ❹

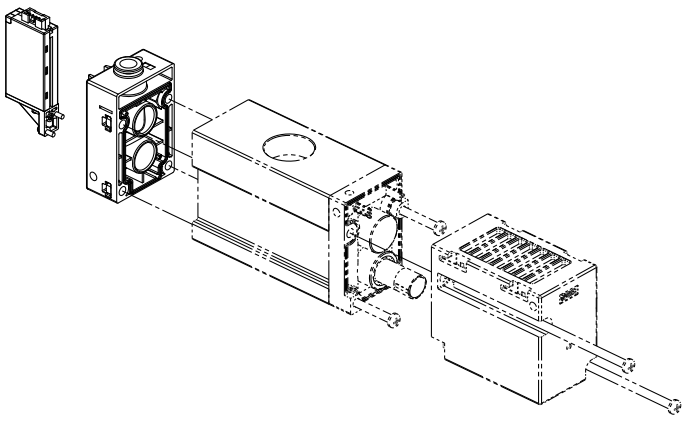

❶ Supply (1/P) port applicable tubing O.D.

Nil	8 (Metric)
N	5/16" (Inch)

❷ Vacuum pressure sensor

Symbol	Pressure range [kPa]	Output
EA	0 to −101	NPN 2 outputs
EB		PNP 2 outputs
FA	−100 to 100	NPN 2 outputs
FB		PNP 2 outputs

❸ Unit

Nil	With unit switching function
M	SI unit only (kPa)
P	With unit switching function (Initial value psi)

Under the New Measurement Act, switches with the unit switching function are not permitted for use in Japan (implemented October 1999).

❹ Lead wire

Nil	Without lead wire with connector
G	Lead wire with connector (Length: 2 m) (Included)

For the type with a valve

ZL3−VP[1]−[1]−[FL][M][H]−A

❶ ❷ ❸ ❹ ❺

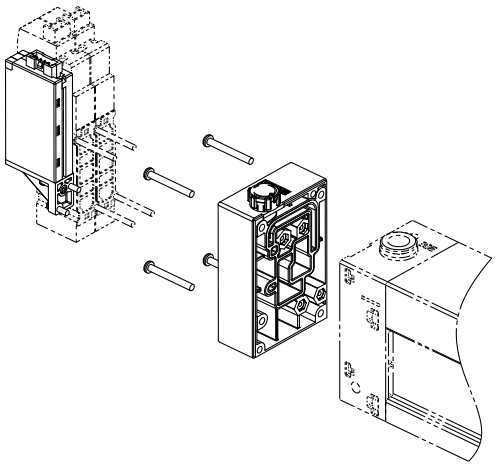

❶ Supply valve

1	N.C.
2	N.O.

❷ Release valve

1	With release valve
2	Without release valve

❸ Vacuum pressure sensor

Symbol	Pressure range [kPa]	Output
EA	0 to −101	NPN 2 outputs
EB		PNP 2 outputs
FA	−100 to 100	NPN 2 outputs
FB		PNP 2 outputs
VA∗1		NPN 1 output + Energy saving control
VB∗1		PNP 1 output + Energy saving control
EL∗1	0 to −101	IO-Link
FL∗1	−100 to 100	IO-Link (Includes energy saving function)

∗1 This option cannot be selected if “2” is selected for ❷.

❹ Unit

Nil∗2	With unit switching function
M	SI unit only (kPa)
P∗2, ∗3	With unit switching function (Initial value psi)

∗2 Under the New Measurement Act, switches with the unit switching function are not permitted for use in Japan (implemented October 1999).
∗3 This option cannot be selected if “VA,” “VB,” “EL,” or “FL” is selected for ❸.

❺ Lead wire

Nil	Without lead wire with connector
G	Lead wire with connector (Length: 2 m) (Included)
W	Lead wire for switch with energy saving function (Length: 2 m) (Included)
H	Lead wire with connector for IO-Link compatible vacuum pressure switch (With M12 connector, Length: 300 mm) (Included)

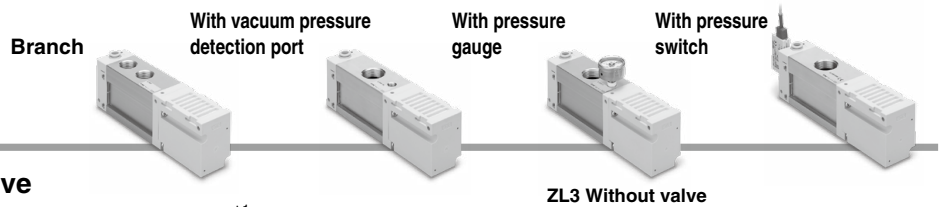

Dimensions

ZL3□□□-□□□□-□ Without valve

Air pressure supply (1/P) port applicable tubing O.D.

	A	Release button color
ZL3□□	8	Light gray
ZL3□N□	5/16"	Orange

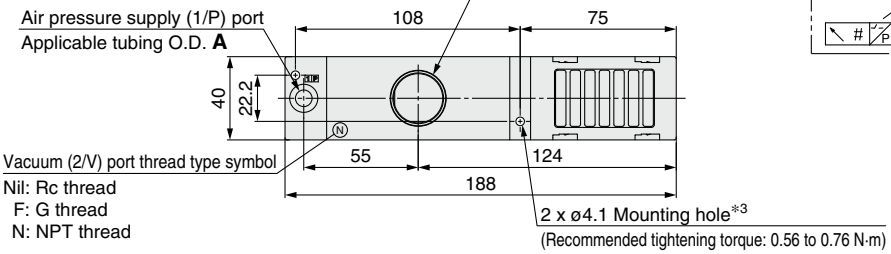

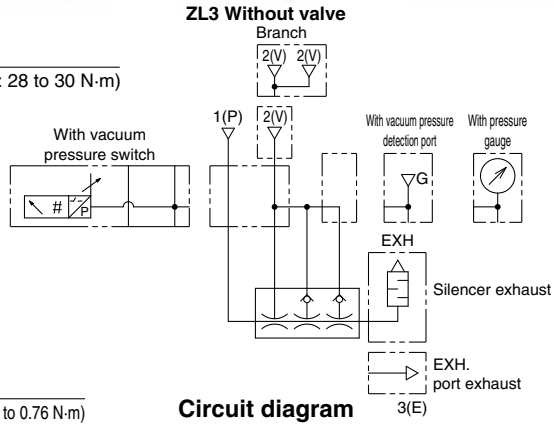

Circuit diagram

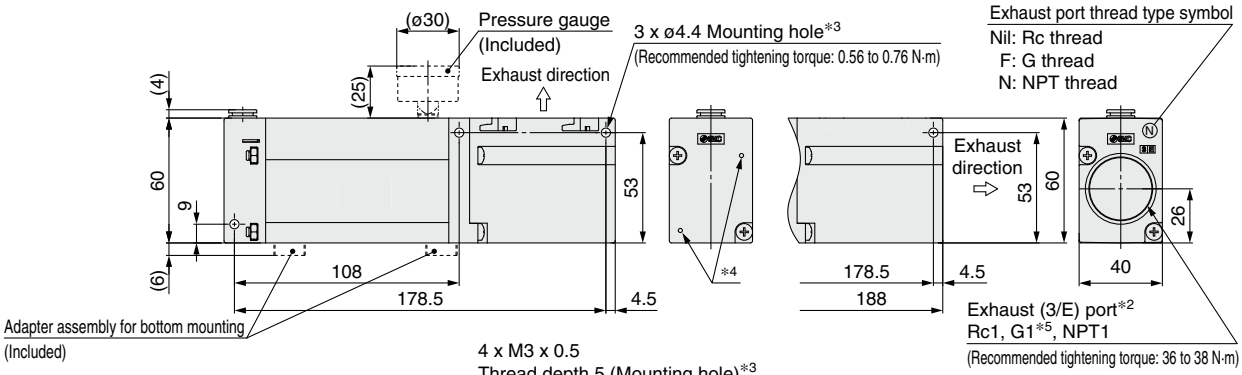

Port exhaust

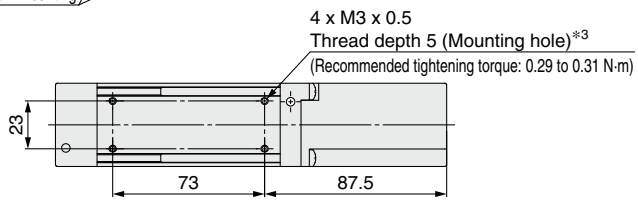

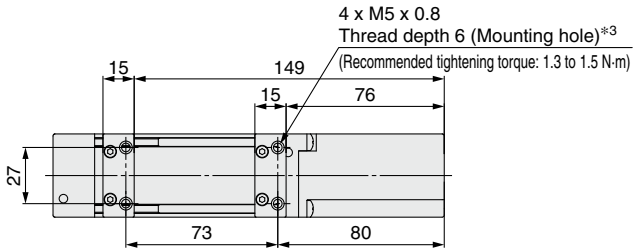

With vacuum pressure switch

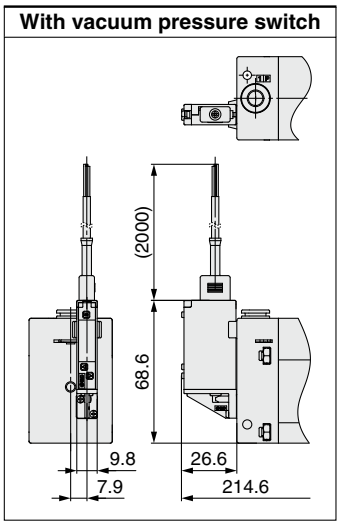

Options

Branch

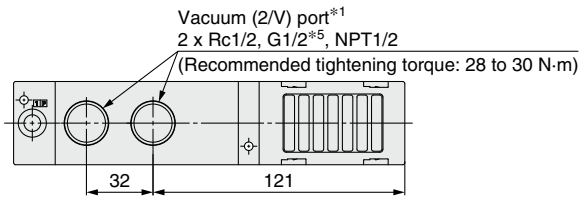

With vacuum pressure detection port

∗ Refer to the vacuum port figure above for the branch specification.

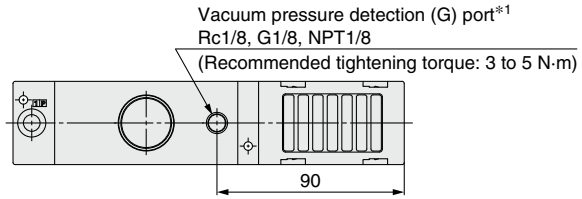

With pressure gauge

∗ Refer to the vacuum port figure above for the branch specification.

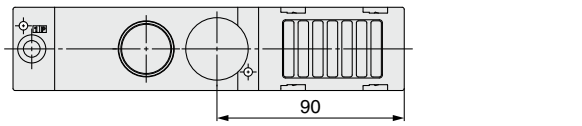

∗1 To connect piping to the vacuum port and vacuum pressure detection port, hold the aluminum alloy body, then connect the piping.
∗2 Hold the exhaust block when connecting piping to the exhaust port.
It is recommended that piping with an inner diameter of 21.7 or more be used.
∗3 Tighten to the recommended torque to mount the body. Tightening with excessive force may damage the product.
∗4 These holes are required for the forming of the product. They are not exhaust ports.
∗5 The thread ridge shape is in compliance with G thread standard ISO 228-1, but the other shapes are not in compliance with ISO 16030 or ISO 1179.
Use a male thread with a length of 10.5 or less for the vacuum port and 11.5 or less for the exhaust port for connection.

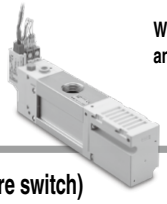
With pressure switch for vacuum with energy saving function

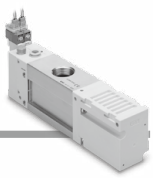
With supply valve and release valve

Dimensions

ZL3□□□-$^{K1}_{B1}$ 5□Z□-$^{E}_{F}$ □□□ With valve (With supply valve, release valve and vacuum pressure switch)

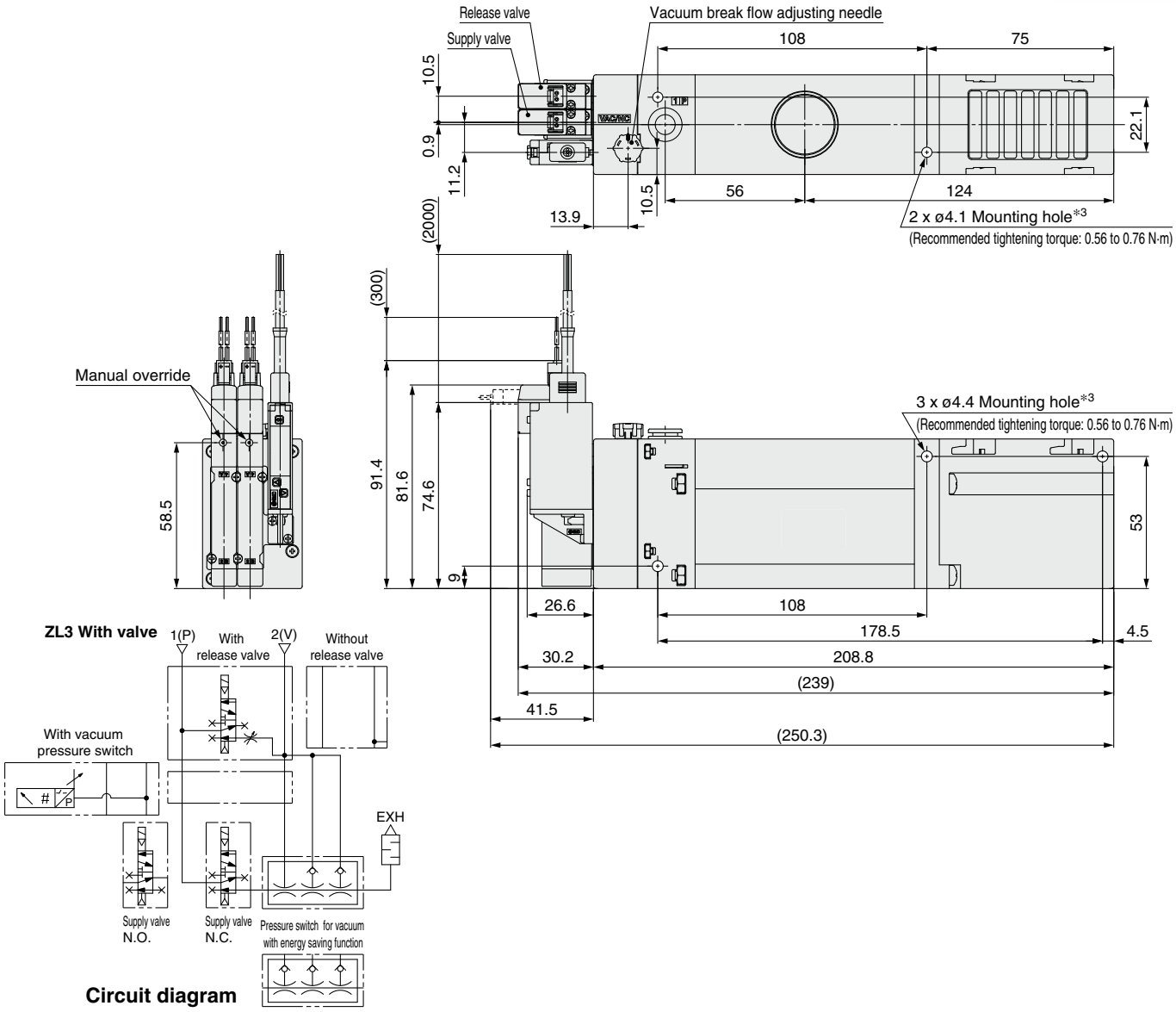

Circuit diagram

ZL3□□□-$^{K2}_{B2}$ 5□Z□-$^{E}_{F}$ □□□	ZL3□□□-$^{K2}_{B2}$ 5□Z□	ZL3□□□-$^{K1}_{B1}$ 5□Z□	ZL3□□□-$^{K1}_{B1}$ 5LOZ-V□□W	ZL3□□□-$^{K1}_{B1}$ 5LOZ-□L□H
With supply valve and vacuum pressure switch	With supply valve	With supply valve and release valve	With pressure switch for vacuum with energy saving function	With IO-Link compatible vacuum pressure switch
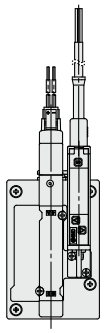	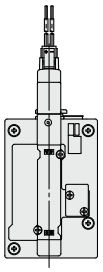	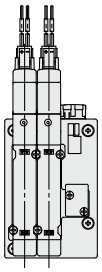	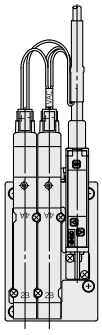	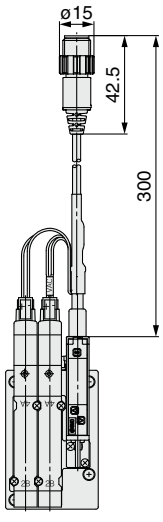

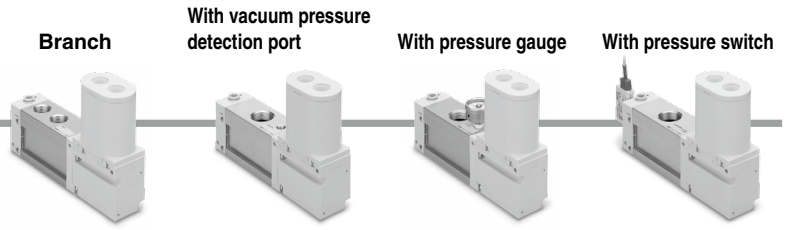

Dimensions

ZL6□□□-□□□□ Without valve

Air pressure supply (1/P) port applicable tubing O.D.

	A	Release button color
ZL6□□	8	Light gray
ZL6□N□	5/16"	Orange

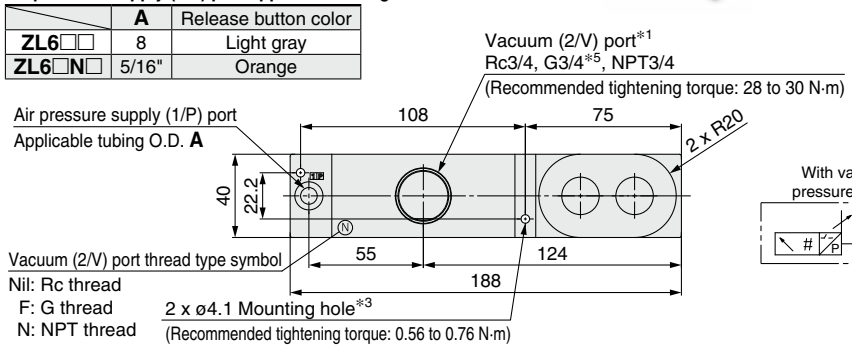

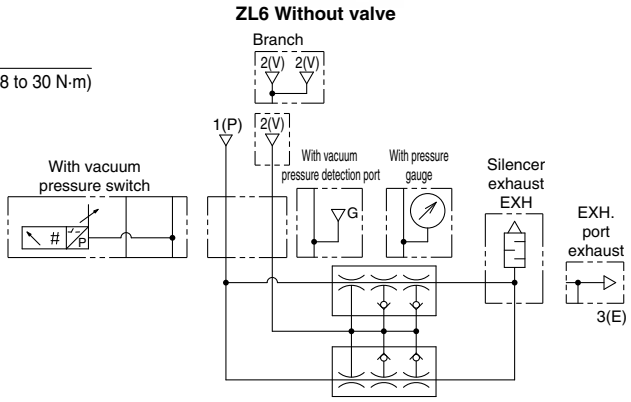

Circuit diagram

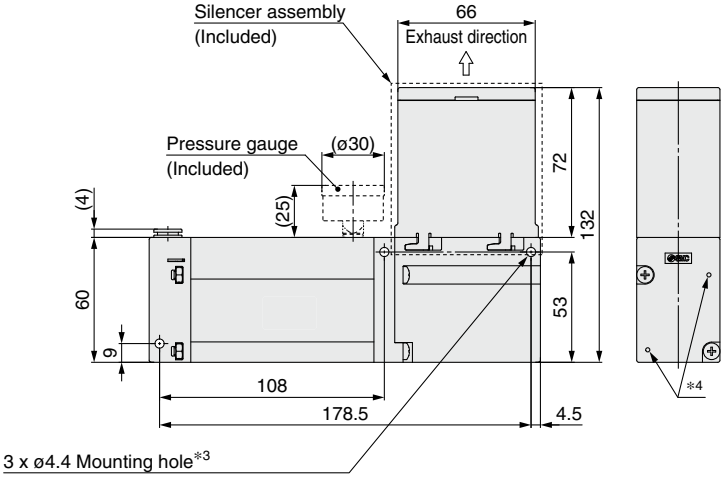

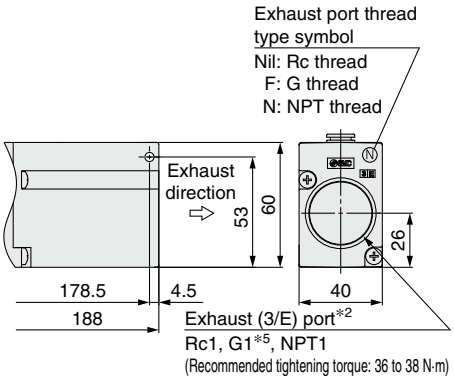

Port exhaust

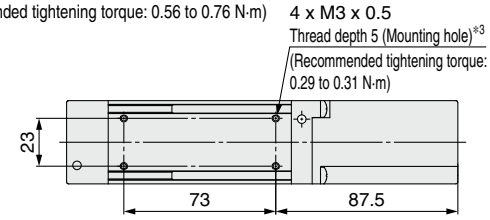

With vacuum pressure switch

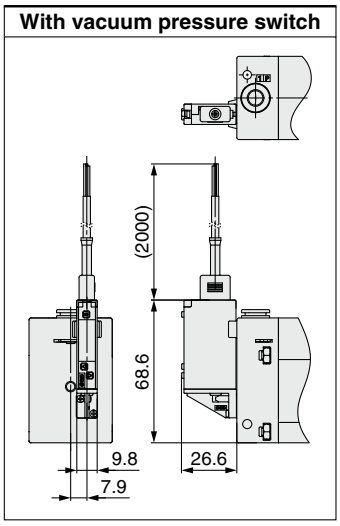

Options

Branch

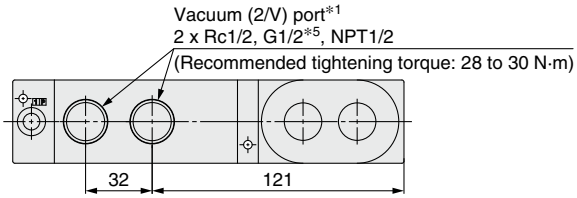

With vacuum pressure detection port

∗ Refer to the vacuum port figure above for the branch specification.

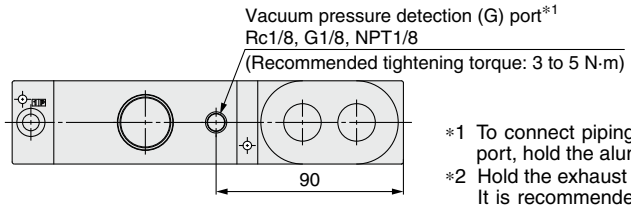

With pressure gauge

∗ Refer to the vacuum port figure above for the branch specification.

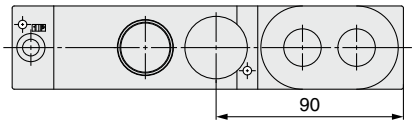

∗1 To connect piping to the vacuum port and vacuum pressure detection port, hold the aluminum alloy body, then connect the piping.
∗2 Hold the exhaust block when connecting piping to the exhaust port. It is recommended that piping with an inner diameter of 21.7 or more be used.
∗3 Tighten to the recommended torque to mount the body. Tightening with excessive force may damage the product.
∗4 These holes are required for the forming of the product. They are not exhaust ports.
∗5 The thread ridge shape is in compliance with G thread standard ISO 228-1, but the other shapes are not in compliance with ISO 16030 or ISO 1179. Use a male thread with a length of 10.5 or less for the vacuum port and 11.5 or less for the exhaust port for connection.

Pressure switch for vacuum with energy saving function

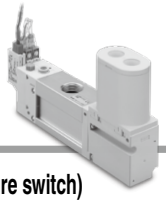

With supply valve and release valve

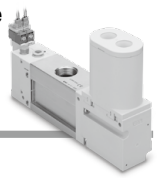

Dimensions

ZL6□□□-$^{K1}_{B1}$ 5□Z□-$^{E}_{F}$ □□□ With valve (With supply valve, release valve and vacuum pressure switch)

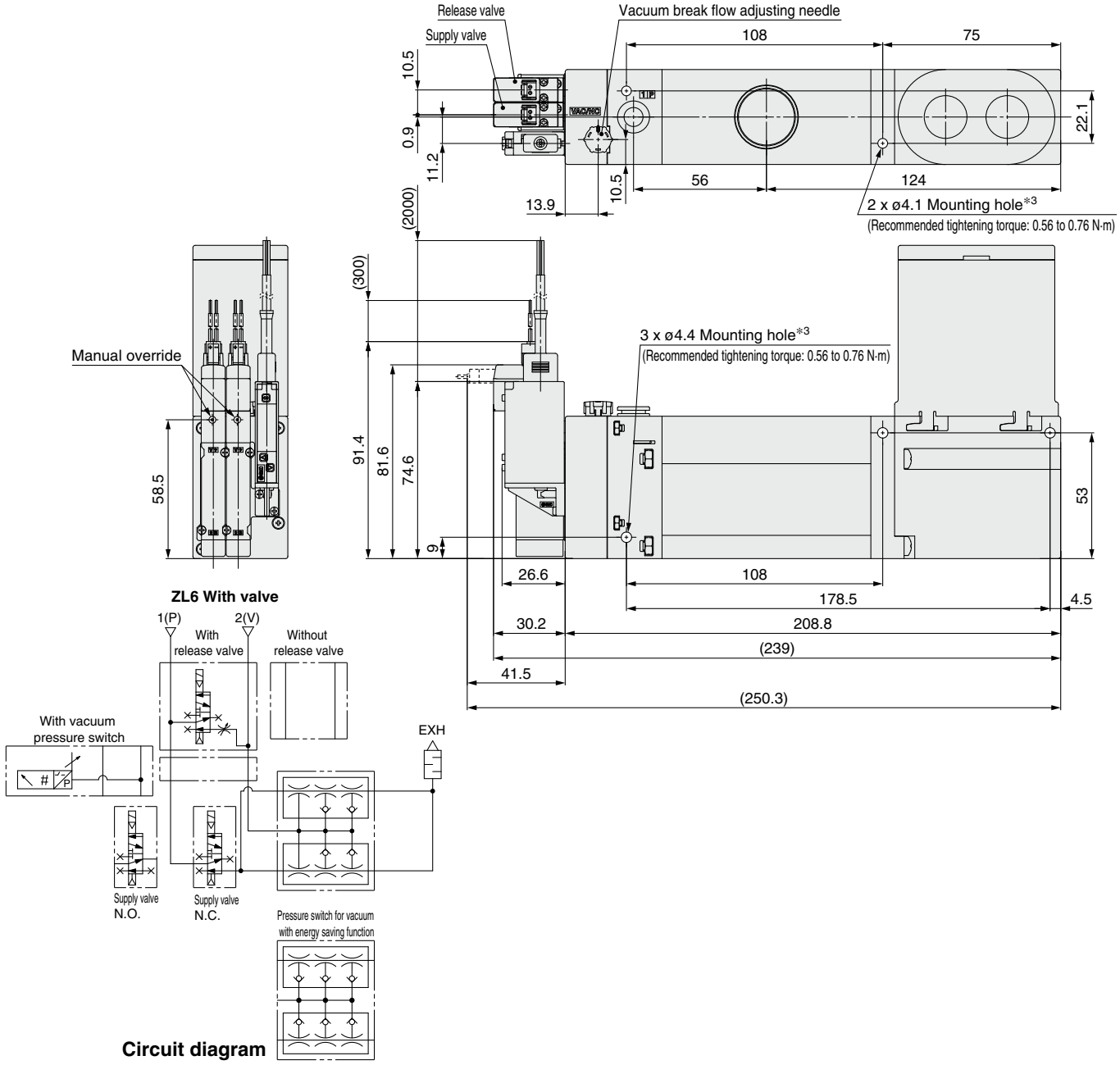

Circuit diagram

ZL6□□□-$^{K2}_{B2}$ 5□Z□-$^{E}_{F}$ □□□	ZL6□□□-$^{K2}_{B2}$ 5□Z□	ZL6□□□-$^{K1}_{B1}$ 5□Z□	ZL6□□□-$^{K1}_{B1}$ 5LOZ-V□□W	ZL6□□□-$^{K1}_{B1}$ 5LOZ-□L□H
With supply valve and vacuum pressure switch	With supply valve	With supply valve and release valve	With pressure switch for vacuum with energy saving function	With IO-Link compatible vacuum pressure switch
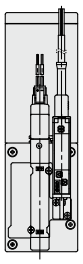	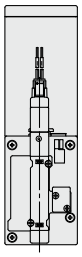	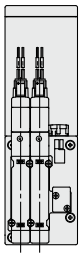	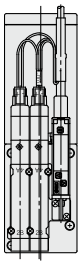	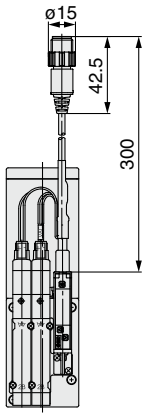

Accessories

Communication Cable

For IO-Link

Connection examples

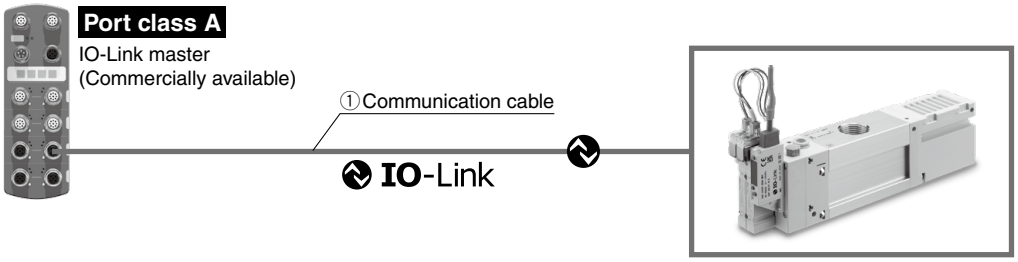

Port class A
vacuum unit

Terminal block wiring type

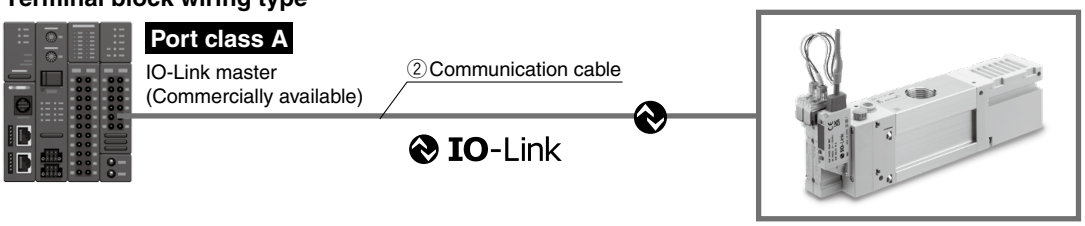

Port class A
vacuum unit

①Communication cable

EX9-AC 005 -SSPS (With connector on both sides (Socket/Plug))

Cable length (L)

005	500 mm
010	1000 mm
020	2000 mm
030	3000 mm
050	5000 mm
100	10000 mm

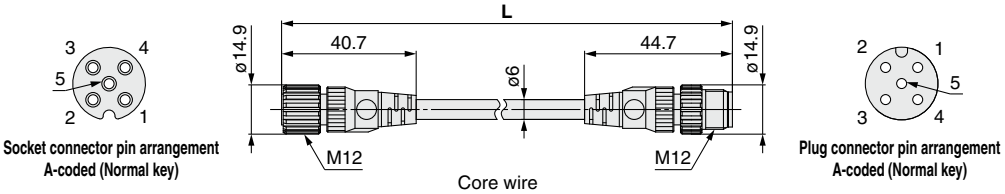

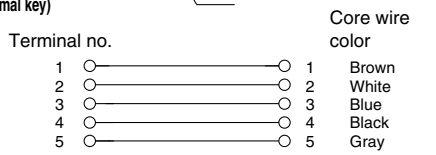

Connections

Item	Specifications
Cable O.D.	ø6 mm
Conductor nominal cross section	0.3 mm²/AWG22
Wire O.D. (Including conductor)	1.5 mm
Min. bending radius (Fixed)	40 mm

EX9-AC 005 -SAPA (With connector on both sides (Socket/Plug))

Cable length (L)

005	500 mm
010	1000 mm
020	2000 mm
030	3000 mm
050	5000 mm
100	10000 mm

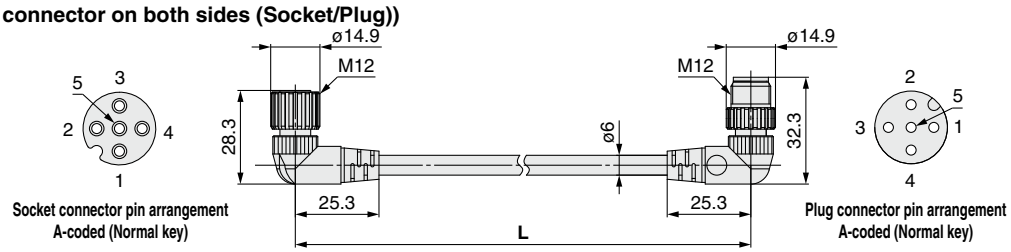

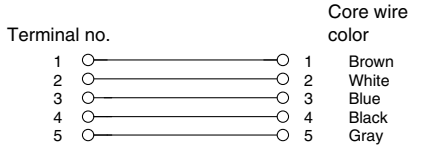

Connections

Item	Specifications
Cable O.D.	ø6 mm
Conductor nominal cross section	0.3 mm²/AWG22
Wire O.D. (Including conductor)	1.5 mm
Min. bending radius (Fixed)	40 mm

Communication Cable

For IO-Link

②Communication cable

EX500-AP 050 - S

Cable length (L)

010	1000 mm
050	5000 mm

Connector specification

S	Straight
A	Angled

Straight connector type

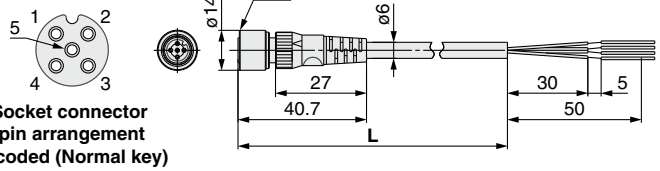

Socket connector pin arrangement A-coded (Normal key)

Item	Specifications
Cable O.D.	ø6 mm
Conductor nominal cross section	0.3 mm²/AWG22
Wire O.D. (Including insulator)	1.5 mm
Min. bending radius (Fixed)	40 mm

Angled connector type

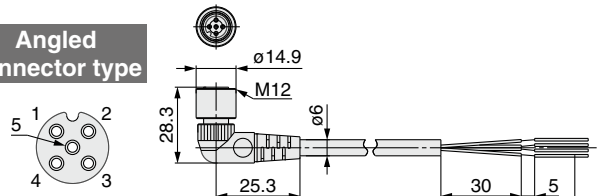

Socket connector pin arrangement A-coded (Normal key)

Item	Specifications
Cable O.D.	ø6 mm
Conductor nominal cross section	0.3 mm²/AWG22
Wire O.D. (Including insulator)	1.5 mm
Min. bending radius (Fixed)	40 mm

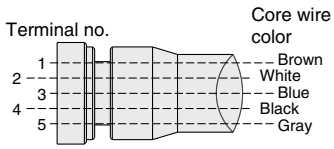

Connections

ZL1/ZL3/ZL6 Series
Specific Product Precautions 1

Be sure to read this before handling the products. Refer to the back cover for safety instructions. For vacuum equipment precautions, refer to the "Handling Precautions for SMC Products" and the "Operation Manual" on the SMC website: https://www.smcworld.com

■ Handling of Products

Handling / Mounting

⚠ Caution

1. Do not drop, hit, or apply excessive impact to the product when handling it.
Even if the body looks undamaged, the internal components may be damaged, leading to a malfunction.

2. Use the product within the specified supply pressure range.
Operation at a pressure which exceeds the specified supply pressure range can cause damage to the product.

3. Load to the ejector body
The ejector body is made of resin; therefore, do not apply load to the port after mounting. Prevent any kind of operation which generates moment as this may cause reduced performance or damage to the body.

4. The exhaust resistance should be as small as possible to obtain max. ejector performance.
There should be no shield around the exhaust port for the silencer exhaust specification.
Note that exhaust resistance may occur depending on the piping diameter and length for the port exhaust specification.
DO NOT block the exhaust port. Doing so will cause the product to crack or break.

5. If the sound absorbing material is clogged, it will cause reduced ejector performance.
In particular, if the product is used in a dusty environment, not only the filter element but also the sound absorbing material will become clogged. It is recommended that the sound absorbing material be replaced periodically.

■ Piping

Piping to the Vacuum Port Adapter (ZL1)

⚠ Caution

1. When mounting or removing the fitting, etc., to or from the vacuum port adapter, hold the vacuum port adapter.
Recommended tightening torque: 3 to 5 N·m
The product may break if it is held directly during mounting or removal.

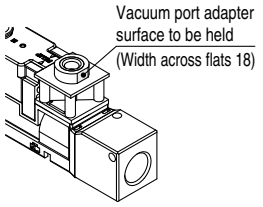

Piping to the Exhaust Port (ZL1)

⚠ Caution

1. When mounting or removing the piping to or from the exhaust port, hold the exhaust block.
Recommended tightening torque: 20 to 25 N·m
The product may break if it is held directly during mounting or removal.

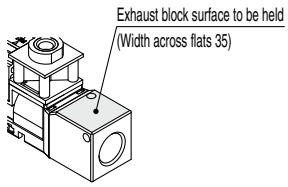

■ Piping

Piping of Each Port (ZL3/ZL6)

⚠ Caution

1. When mounting or removing the fitting to or from the vacuum port or vacuum pressure detection port, hold the aluminum alloy body.

2. When mounting or removing the piping to or from the exhaust port, hold the exhaust block.

Thread size	Recommended tightening torque [N·m]
1/8	3 to 5
1/2	28 to 30
3/4	28 to 30
1	36 to 38

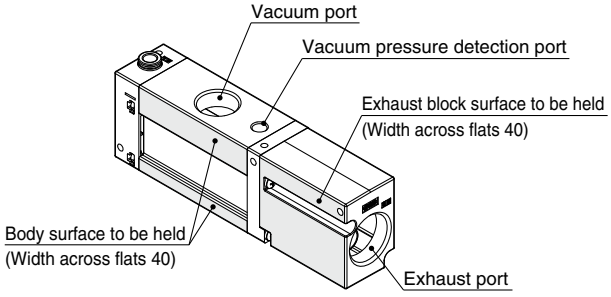

Branch Port

⚠ Warning

1. When using the branch port specification to adsorb and transfer multiple workpieces using branch piping, if one workpiece detaches, the vacuum pressure will decrease and the other workpieces will also detach. When connecting branch piping, please take measures to prevent the dropping of workpieces.

Other Tubing Brands

⚠ Caution

1. When using tubing from a manufacturer other than SMC, be careful of the tolerance of the tubing O.D.
1) Nylon tubing: Within ±0.1 mm
2) Soft nylon tubing: Within ±0.1 mm
3) Polyurethane tubing: Within +0.15 mm, within –0.2 mm
Do not use tubing which does not satisfy the specified tubing O.D. accuracy. It may cause difficulty when connecting the tubing, air leakage after connection, or the disconnection of the tubing.

ZL1/ZL3/ZL6 Series
Specific Product Precautions 2

Be sure to read this before handling the products. Refer to the back cover for safety instructions. For vacuum equipment precautions, refer to the "Handling Precautions for SMC Products" and the "Operation Manual" on the SMC website: https://www.smcworld.com

■ Suction Cover

Replacement Procedure for Filter Element (ZL1)

⚠ Caution

1. The suction cover can easily be attached or detached.
The suction cover can be removed by pushing the suction cover levers (2 pcs.) on the side. (It can be removed from the opposite side as well.)
Replace the filter element assembled in the filter case.
Check that the gasket is sitting correctly in the groove before mounting the suction cover.
Check that the lever hook is locked in the correct position when mounting the suction cover. If the hook or the lever is damaged or deformed, replace the suction cover assembly.

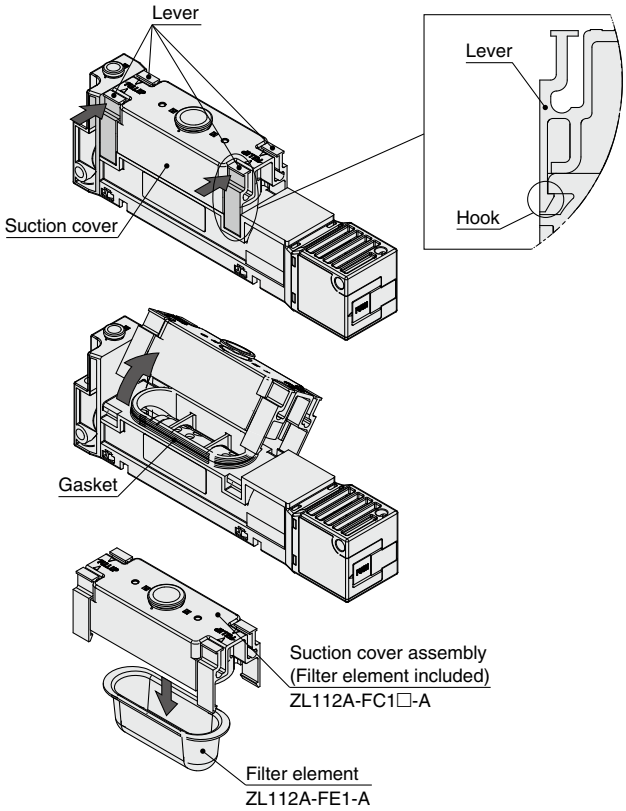

■ Solenoid Valve / Pressure Switch

Wiring and Connection of Solenoid Valves and Vacuum Pressure Switches

⚠ Caution

1. Incorrect wiring can damage the vacuum pressure switch and cause failure or malfunction. Connections should only be made when the power supply is turned OFF.

2. Do not attempt to insert or pull out the connector while the power is ON. Doing so may cause malfunction.

■ Solenoid Valve / Pressure Switch

Wiring and Connection of Solenoid Valves and Vacuum Pressure Switches

⚠ Caution

3. Malfunctions stemming from noise may occur if the wire is installed in the same route as that of the power cable or another high-voltage cable. Wire the switch independently.

4. Be sure to ground the frame ground (FG) terminal when using a commercially available switching power supply. (Pressure switch)

5. The tensile force of the solenoid valve and vacuum pressure switch lead wire is 30 N. Exceeding this value can cause breakage. Hold the body when handling the product.

6. Avoid repeatedly bending or stretching the lead wire of the solenoid valve or vacuum pressure switch.
Lead wires will break if bending stress or tensile force is applied to them repeatedly.
If the lead wire moves around, secure it near the body of the product.

Mounting or Removal of the Vacuum Pressure Switch Connector (ZL1)

⚠ Caution

1. Before the mounting or removal of the vacuum pressure switch connector, it is necessary to remove the silencer case assembly (port block assembly). Remove the silencer case assembly (port block assembly) following the procedure below before mounting or removing the pressure switch connector.
Remove the clip using a flat blade screwdriver from the bottom of the product. Remove the silencer case assembly (port block assembly) from the body. Mount or remove the pressure switch connector.

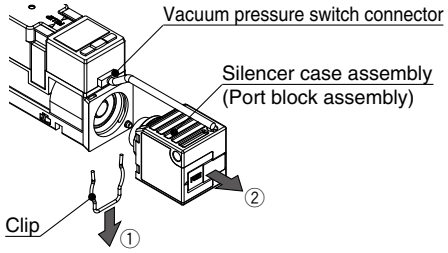

Mounting or Removal of the Vacuum Pressure Switch Connector (ZL3/ZL6)

⚠ Caution

- When mounting the connector to the switch housing, push the connector straight onto the pins until the lever locks into the housing slot.
- When removing the connector from the switch housing, push the lever (section A) down with your thumb to unlock it from the slot, and then lift the connector straight off of the pins.

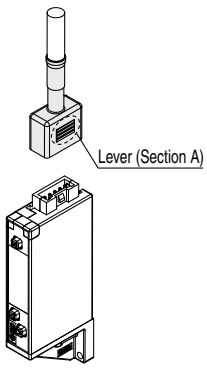

ZL1/ZL3/ZL6 Series
Specific Product Precautions 3

Be sure to read this before handling the products. Refer to the back cover for safety instructions. For vacuum equipment precautions, refer to the "Handling Precautions for SMC Products" and the "Operation Manual" on the SMC website: https://www.smcworld.com

■ Solenoid Valve / Pressure Switch

Environment

⚠ Warning

1. **The solenoid valve and vacuum pressure switch are not designed to be explosion proof, dustproof, or drip proof. Never use in atmospheres which contain flammable or explosive gases.**

⚠ Caution

1. **The vacuum pressure switch and solenoid valve (DC type) are CE/UKCA-compliant but not immune to lightning strikes.**
   Take measures against lightning strikes in your system.
2. **Do not use the product in places where static electricity is a problem. Doing so may result in system failure or malfunction.**

Design

⚠ Caution

1. **Avoid energizing the solenoid valve for long periods of time.**
   If a solenoid valve is continuously energized for an extended period of time, the heat generated by the coil assembly may reduce the performance and life of the valve or have adverse effects on peripheral equipment.
   Therefore, if the solenoid valve is to be continuously energized for an extended period of time or if the energized period per day will be longer than the de-energized period, use an N.O. (normally open) type product.
   When the valve is mounted onto a control panel, take measures to radiate heat in order to keep the product temperature within the specified range.
2. **For specific product precautions on solenoid valves, refer to the solenoid valve catalog.**
   ZL1: SYJ500 Series
   ZL3/ZL6: JSY3000 Series
3. **For specific product precautions on vacuum pressure switches, refer to the pressure switch catalog.**
   ZL1: ZSE30A Series
   ZL3/ZL6: ZSE10 Series

■ Solenoid Valve / Pressure Switch

How to Replace Vacuum Pressure Switch Replacement Assemblies (ZL3/ZL6)

The ZL3/ZL6 series' vacuum pressure switch is mounted to a resin part with tapping screws, so the resin part must be replaced at the same time as the pressure switch.
A pressure switch replacement assembly that includes the resin part is available. When replacing, use the following method.

For the type without a valve

1) Loosen the 4 cross-recessed round head screws, and remove the front adapter assembly to which the pressure switch is mounted.
2) Mount the front adapter assembly included with the vacuum pressure switch replacement assembly using the 4 cross-recessed round head screws from the previous step. (Recommended torque: 0.76 to 0.84 N·m)
   ∗ Be careful not to drop the gasket.
3) Mount the O-ring to the vacuum pressure switch, and mount it to the front adapter assembly with the 2 included tapping screws. (Recommended torque: 0.23 to 0.27 N·m)

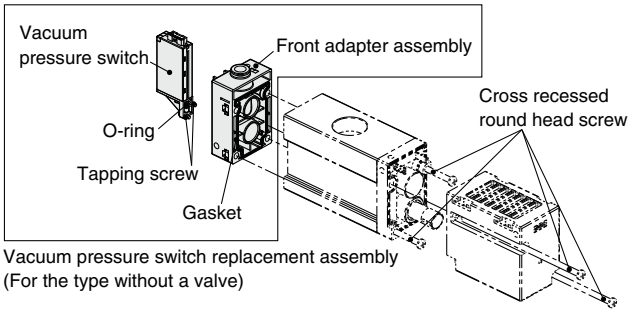

Vacuum pressure switch replacement assembly
(For the type without a valve)

For the type with a valve

1) Remove the installed supply valve, release valve, and vacuum pressure switch from the body.
2) Loosen the 4 round head combination screws, and remove the valve plate assembly.
3) Mount the valve plate assembly included with the vacuum pressure switch replacement assembly to the body using the included round head combination screws. (Recommended torque: 0.18 to 0.20 N·m)
   ∗ Be careful not to drop the gasket and hexagon nuts (4 pcs.).
4) Mount the supply valve and release valve that were installed prior to replacement to the valve plate assembly. (Recommended torque: 0.15 to 0.18 N·m)
5) Mount the O-ring to the vacuum pressure switch, and mount it to the valve plate assembly with the 2 included tapping screws. (Recommended torque: 0.23 to 0.27 N·m)

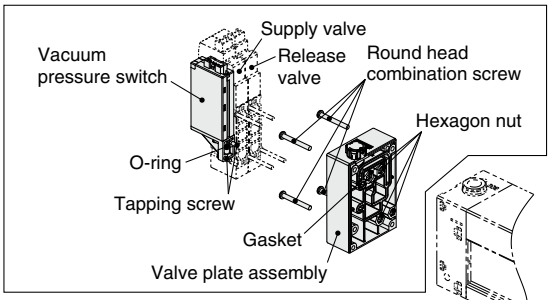

Vacuum pressure switch replacement assembly
(For the type with a valve)

ZL1/ZL3/ZL6 Series
Specific Product Precautions 4

Be sure to read this before handling the products. Refer to the back cover for safety instructions. For vacuum equipment precautions, refer to the "Handling Precautions for SMC Products" and the "Operation Manual" on the SMC website: https://www.smcworld.com

■ Ejector Exhaust

Exhaust Air and How to Replace Sound Absorbing Material (ZL1)

⚠ Caution

1. **Air is exhausted from the connecting part between the silencer case and the silencer cover. This does not affect the performance of the product.**
2. **The sound absorbing material can be easily replaced.**
   Push the area where the word "PUSH" is printed on the silencer cover in the direction shown in Fig. 1.
   The silencer cover will come out. (Refer to Fig. 2.) Remove sound absorbing material 1 and 2, and replace them. (Refer to Fig. 3.)
   After replacing the sound absorbing material, align the end surface of sound absorbing material 1 with the end surface of the diffuser while engaging the hooks with the hook holes, and push the silencer cover back into place. (Refer to Fig. 4.)

Fig. 1

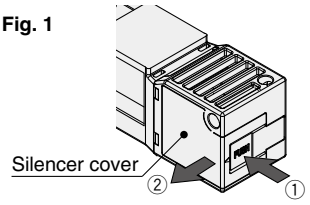

Fig. 2

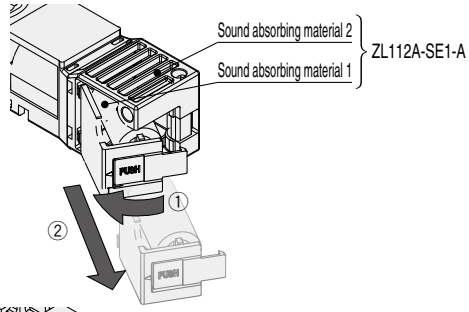

Fig. 3

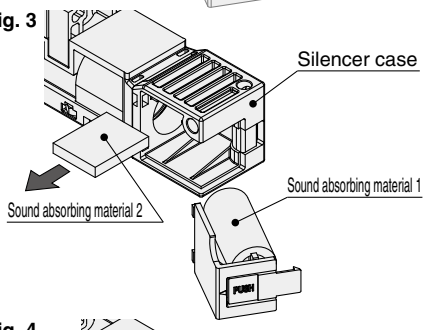

Fig. 4

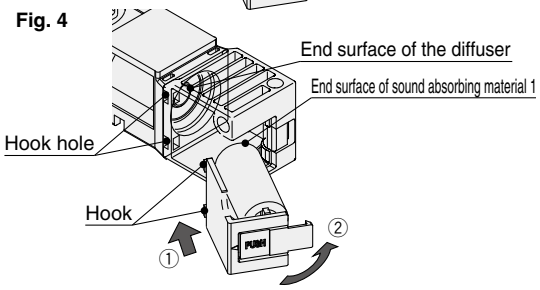

∗ If the product is mounted with the silencer cover side facing a wall, the maintenance method shown in the figures above will not be possible.
Move the product away from the wall before conducting maintenance.

■ Ejector Exhaust

How to Replace Sound Absorbing Material (ZL3)

Loosen the assembly screws as shown in Fig. 1 to remove the silencer assembly.
Replace the sound absorbing material in the silencer assembly in the direction shown in Fig. 2. Assemble the silencer assembly using the assembly screws.
Recommended tightening torque: 0.76 to 0.84 N·m

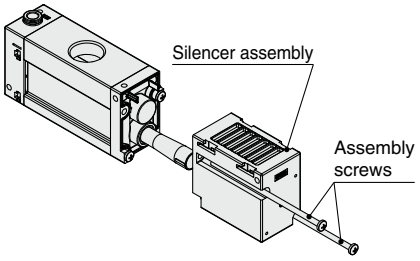

Fig. 1

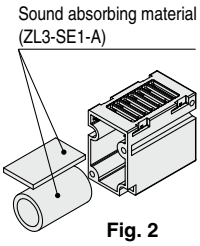

Fig. 2

How to Assemble and Replace Silencer Assembly (ZL6)

The silencer assembly of the ZL6 series is not attached at the time of delivery. Please attach it before use.
As shown in Fig. 1, align the hooks of the silencer assembly with the grooves on the body, and push in the direction of the arrow until it clicks.

Fig. 1

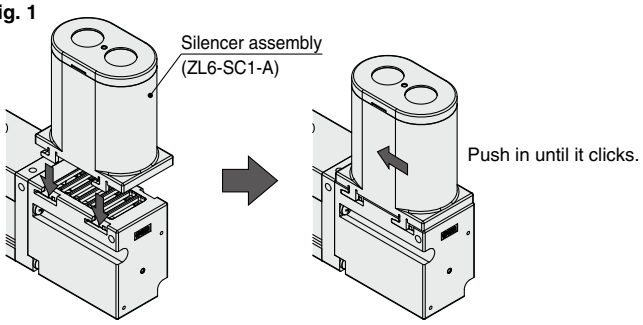

Exhaust Noise

⚠ Caution

- When the vacuum ejector generates vacuum, noise can be heard from the exhaust port when the standard supply pressure is close to the pressure that generates peak vacuum pressure, making the vacuum pressure unstable. If the vacuum pressure range is adequate for adsorption, there should be no problem. If the noise causes a problem or affects the setting of the pressure switch, change the supply pressure slightly to avoid the pressure range of the noise.

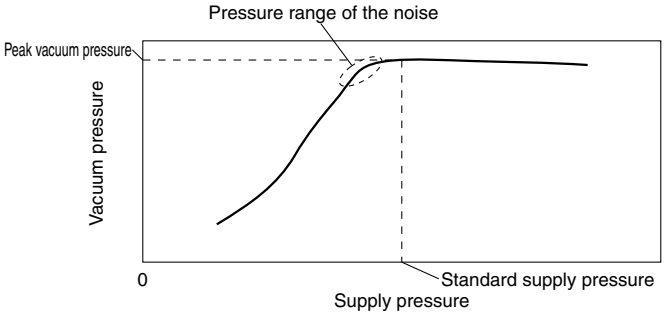

Specific Product Precautions 5

Be sure to read this before handling the products. Refer to the back cover for safety instructions. For vacuum equipment precautions, refer to the "Handling Precautions for SMC Products" and the "Operation Manual" on the SMC website: https://www.smcworld.com

■ Vacuum Break Flow Adjusting Needle

Vacuum Break Air

⚠ Caution

1. **The flow rate characteristics show the representative values of the product itself.**
   They may change depending on piping, circuit and pressure conditions, etc. The flow rate characteristics and the number of needle rotations will vary due to the range of the specifications of the product.
2. **When fully closed, leakage cannot be prevented completely. There is an allowance for a certain amount of leakage in the product's specifications. Tightening the needle to reduce leakage to zero may result in equipment damage.**

Operation of Vacuum Break Flow Adjusting Needle (ZL1)

⚠ Caution

1. **The needle has a retaining mechanism, so it will not continue to rotate after it reaches the rotation stop position.**
   Turning the needle too far may cause damage.
2. **Do not use tools, such as pliers, to rotate the knob.**
   This can cause the idle rotation of the knob or damage.
3. **Do not overtighten the lock nut.**
   It is possible to tighten the lock nut (hexagon) manually. When tightening further with tools, tighten by approximately 15° to 30°. Overtightening may cause breakage.

Operation of Vacuum Break Flow Adjusting Needle (ZL3/ZL6)

⚠ Warning

1. **After pushing the knob down to lock, confirm that it is locked.**
   It should not be possible to rotate the knob to the right or to the left. If the knob is pulled with force, it may break. Do not pull the knob with excessive force.

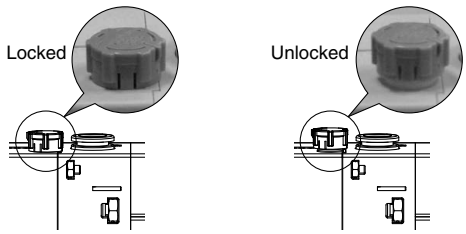

2. **Check the number of rotations of the needle valve.**
   The needle valve has a retaining mechanism, so it will not continue to rotate any further. Turning the needle too far may cause damage.
3. **Do not use tools, such as pliers, to rotate the knob.**
   This can cause the idle rotation of the knob or damage.

⚠ Safety Instructions

These safety instructions are intended to prevent hazardous situations and/or equipment damage. These instructions indicate the level of potential hazard with the labels of **"Caution," "Warning"** or **"Danger."** They are all important notes for safety and must be followed in addition to International Standards (ISO/IEC)*1), and other safety regulations.

⚠ Danger : **Danger** indicates a hazard with a high level of risk which, if not avoided, will result in death or serious injury.

⚠ Warning: **Warning** indicates a hazard with a medium level of risk which, if not avoided, could result in death or serious injury.

⚠ Caution: **Caution** indicates a hazard with a low level of risk which, if not avoided, could result in minor or moderate injury.

*1) ISO 4414: Pneumatic fluid power - General rules and safety requirements for systems and their components
ISO 4413: Hydraulic fluid power - General rules and safety requirements for systems and their components
IEC 60204-1: Safety of machinery - Electrical equipment of machines - Part 1: General requirements
ISO 10218-1: Robots and robotic devices - Safety requirements for industrial robots - Part 1:Robots
etc.

⚠ Warning

1. The compatibility of the product is the responsibility of the person who designs the equipment or decides its specifications.

Since the product specified here is used under various operating conditions, its compatibility with specific equipment must be decided by the person who designs the equipment or decides its specifications based on necessary analysis and test results. The expected performance and safety assurance of the equipment will be the responsibility of the person who has determined its compatibility with the product. This person should also continuously review all specifications of the product referring to its latest catalog information, with a view to giving due consideration to any possibility of equipment failure when configuring the equipment.

2. Only personnel with appropriate training should operate machinery and equipment.

The product specified here may become unsafe if handled incorrectly. The assembly, operation and maintenance of machines or equipment including our products must be performed by an operator who is appropriately trained and experienced.

3. Do not service or attempt to remove product and machinery/ equipment until safety is confirmed.

1. The inspection and maintenance of machinery/equipment should only be performed after measures to prevent falling or runaway of the driven objects have been confirmed.
2. When the product is to be removed, confirm that the safety measures as mentioned above are implemented and the power from any appropriate source is cut, and read and understand the specific product precautions of all relevant products carefully.
3. Before machinery/equipment is restarted, take measures to prevent unexpected operation and malfunction.

4. Our products cannot be used beyond their specifications. Our products are not developed, designed, and manufactured to be used under the following conditions or environments. Use under such conditions or environments is not covered.

1. Conditions and environments outside of the given specifications, or use outdoors or in a place exposed to direct sunlight.
2. Use for nuclear power, railways, aviation, space equipment, ships, vehicles, military application, equipment affecting human life, body, and property, fuel equipment, entertainment equipment, emergency shut-off circuits, press clutches, brake circuits, safety equipment, etc., and use for applications that do not conform to standard specifications such as catalogs and operation manuals.
3. Use for interlock circuits, except for use with double interlock such as installing a mechanical protection function in case of failure. Please periodically inspect the product to confirm that the product is operating properly.

⚠ Caution

We develop, design, and manufacture our products to be used for automatic control equipment, and provide them for peaceful use in manufacturing industries.
Use in non-manufacturing industries is not covered.
Products we manufacture and sell cannot be used for the purpose of transactions or certification specified in the Measurement Act.
The new Measurement Act prohibits use of any unit other than SI units in Japan.

Limited warranty and Disclaimer/ Compliance Requirements

The product used is subject to the following "Limited warranty and Disclaimer" and "Compliance Requirements".
Read and accept them before using the product.

Limited warranty and Disclaimer

1. The warranty period of the product is 1 year in service or 1.5 years after the product is delivered, whichever is first.*2)
   Also, the product may have specified durability, running distance or replacement parts. Please consult your nearest sales branch.
2. For any failure or damage reported within the warranty period which is clearly our responsibility, a replacement product or necessary parts will be provided.
   This limited warranty applies only to our product independently, and not to any other damage incurred due to the failure of the product.
3. Prior to using SMC products, please read and understand the warranty terms and disclaimers noted in the specified catalog for the particular products.

***2) Vacuum pads are excluded from this 1 year warranty.**
A vacuum pad is a consumable part, so it is warranted for a year after it is delivered.
Also, even within the warranty period, the wear of a product due to the use of the vacuum pad or failure due to the deterioration of rubber material are not covered by the limited warranty.

Compliance Requirements

1. The use of SMC products with production equipment for the manufacture of weapons of mass destruction (WMD) or any other weapon is strictly prohibited.
2. The exports of SMC products or technology from one country to another are governed by the relevant security laws and regulations of the countries involved in the transaction. Prior to the shipment of a SMC product to another country, assure that all local rules governing that export are known and followed.

Revision History

Edition B	* The ZL3 and ZL6 have been added. * Errors in text have been corrected. * The number of pages has been increased from 20 to 36.	YP
Edition C	* An N.O. specification has been added to the pressure switch for vacuum with energy saving function. * An IO-Link compatible vacuum pressure switch has been added. * The number of pages has been increased from 36 to 44.	BZ

⚠ Safety Instructions Be sure to read the "Handling Precautions for SMC Products" (M-E03-3) and "Operation Manual" before use.

SMC Corporation
Akihabara UDX 15F,
4-14-1, Sotokanda, Chiyoda-ku, Tokyo 101-0021, JAPAN
Phone: 03-5207-8249 Fax: 03-5298-5362
https://www.smcworld.com
© 2023 SMC Corporation All Rights Reserved

Specifications are subject to change without prior notice
and any obligation on the part of the manufacturer.