Separate Controller

IO-Link
* The IZT40 is not compatible with IO-Link.

CE UKCA

RoHS

Bar Type / Nozzle Type Ionizer

IZT40/41(-L)/42(-L)/43(-L) Series

Space saving

Bar type *IZT40/41/42 Series* — Height 37 mm x Width 30 mm

Nozzle type *IZT43 Series* — Height 32 mm x Width 16 mm

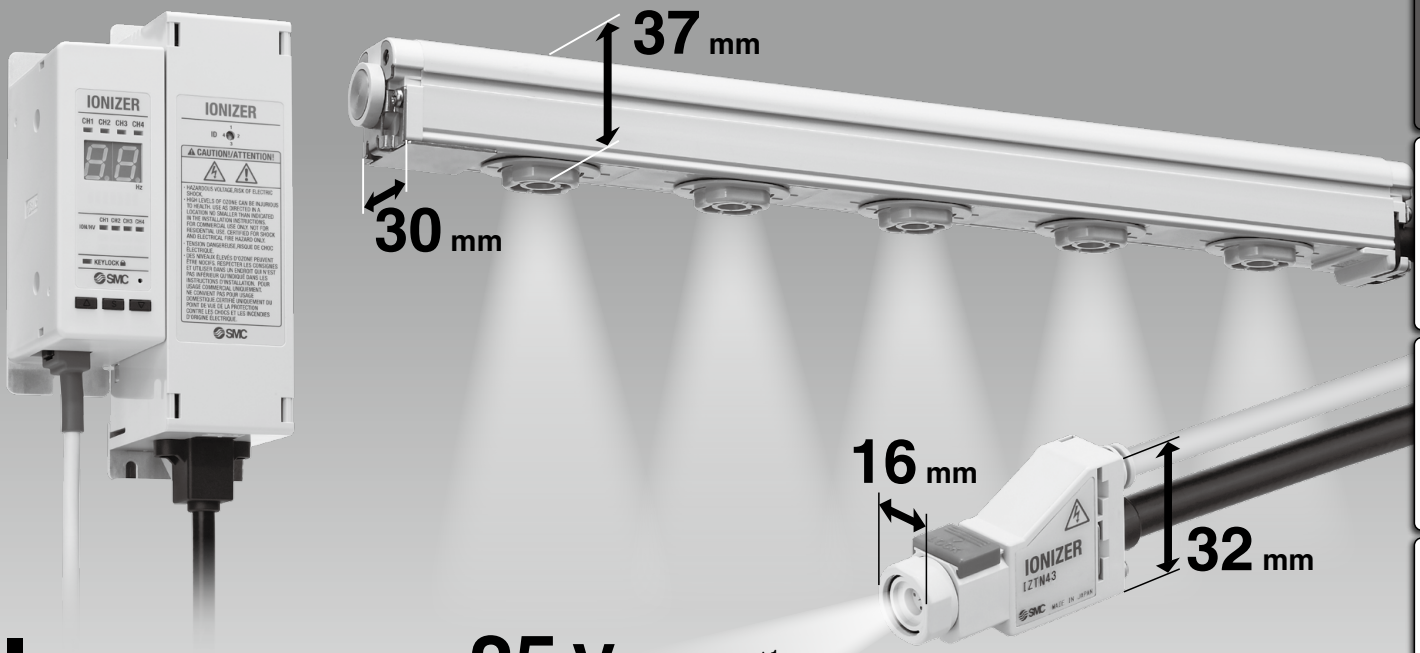

Potential amplitude: 25 V or less[*1]

Rapid static neutralization: Fastest time 0.1 s[*2]

Static neutralization is possible even when air is not being supplied.

IO-Link Compatible

- ON/OFF with a single communication line[*1] (Periodic transmission of set values and status for up to 4 channels)
- Reading of the device information and parameter batch settings are possible.

*1 Wiring with an auxiliary power line is required separately.

Series		Type	Application	IO-Link
Bar	IZT42	Dual AC	For reducing the potential amplitude	●
	IZT41	AC	For maintaining a constant offset voltage	●
	IZT40	Standard	Simple operation by just turning the power on	—
Nozzle	IZT43	AC	For maintaining a constant offset voltage	●

*1 IZT42 installation height: 300 mm
*2 IZT40, 41
Conditions: Discharge time from 1000 V to 100 V
Object to be neutralized: Charged plate (Dimensions: 150 mm x 150 mm, Capacitance: 20 pF)
Installation distance: 100 mm (High speed static neutralization cartridge, Tungsten emitter with air purge)
Bar length: 1120 mm

Dual AC Type *IZT42 Series* (Potential amplitude reduction specification)

Bar

Potential amplitude: 25 V or less[*1]

Rapid static neutralization: 0.1 s[*2]

*1 IZT42 installation height: 300 mm
*2 IZT40, 41
Conditions: Discharge time from 1000 V to 100 V
Object to be neutralized: Charged plate (Dimensions: 150 mm x 150 mm, Capacitance: 20 pF)
Installation distance: 100 mm (High speed static neutralization cartridge, Tungsten emitter with air purge)
Bar length: 1120 mm

The potential amplitude can be reduced with SMC's original dual AC type sensor.

Static neutralization in consideration of damage to a device which is sensitive to electrostatic discharge (ESD) can be achieved. The potential amplitude applied to the applicable workpiece is reduced even if the workpiece is mounted within close proximity of the ionizer.

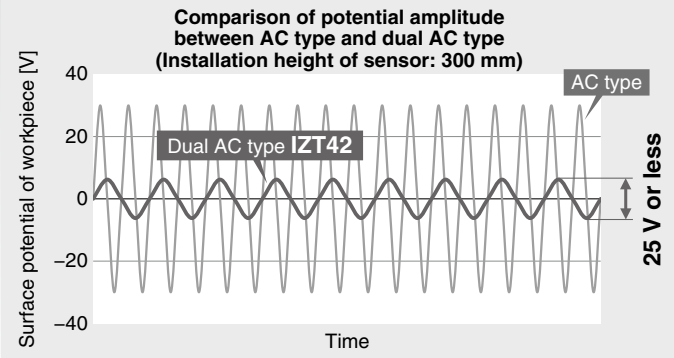

Dual AC type IZT42

+ ions and – ions are discharged at the same time to allow the + and – ions to reach the workpiece evenly, thereby reducing the potential amplitude.

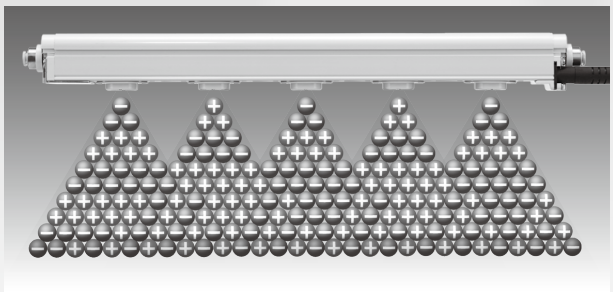

AC type IZT40, 41, 43

+ ion and – ion layers reach the workpiece alternately, which increases the potential amplitude.

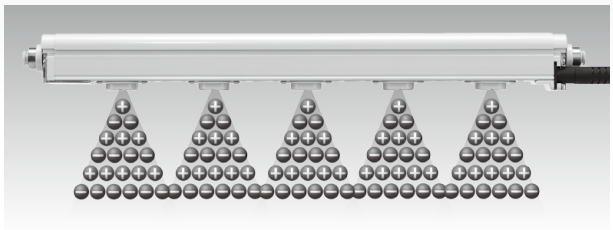

Application Examples

For the static neutralization of glass substrates

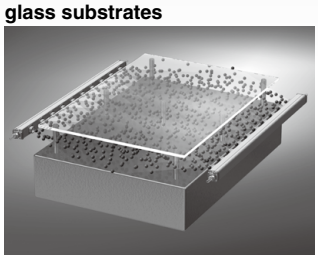

Prevents the breakage of glass substrates by the static electricity generated when the substrate is lifted from the surface plate

For the static neutralization of electric substrates

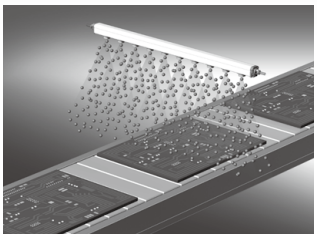

· Prevents element disruption due to discharge
· Prevents the adhesion of dust

AC Type *IZT41, 43 Series*

Bar Nozzle

● With auto balance function

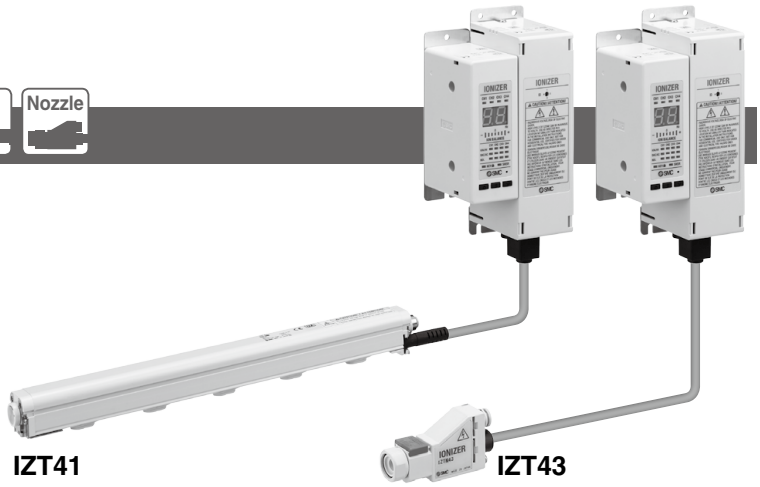

* The controller can be used with either type.
Use a high voltage power supply module compatible with the selected type.

- **Emitter contamination detection continually displayed and output**
- **Individual ON/OFF command from an external input signal**

With auto balance function

The sensor is installed within the ionizer body and may be mounted anywhere.

The offset voltage (ion balance) in the static neutralization area is controlled so that the voltage is maintained at a constant value by monitoring the ions emitted from the ionizer using the ground line.

Effect of auto balance (Image)

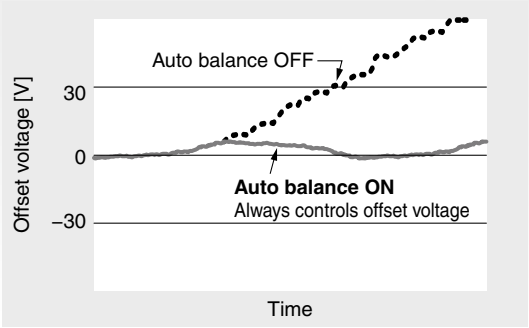

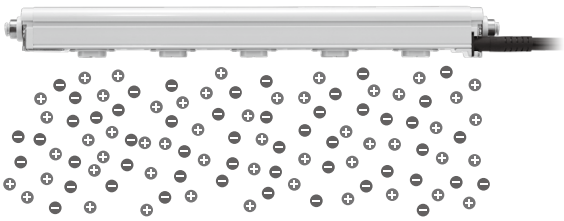

Standard Type *IZT40 Series* Bar

- **Simple operation: Can be controlled by powering the ionizer ON**

An AC adapter is available.
(The AC adapter can only be used for 1 ionizer.)

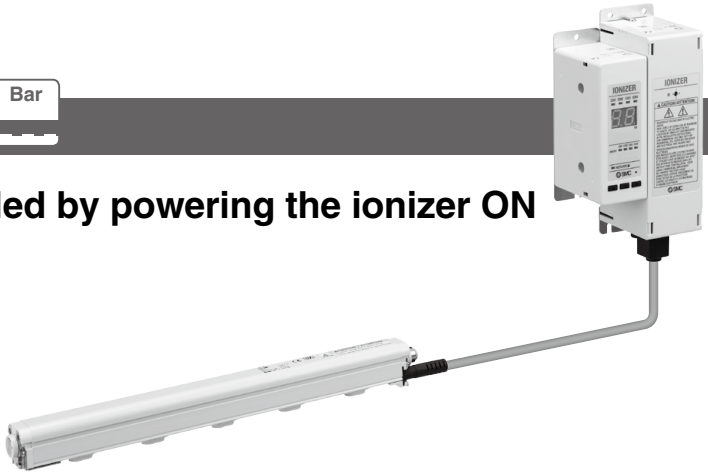

The compact body allows for space saving.

Bar

- **Reduced height**

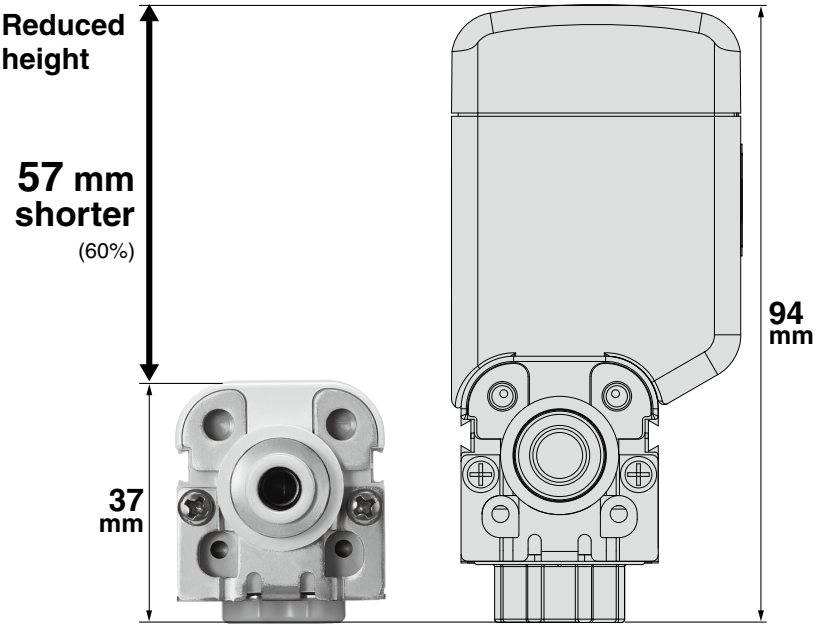

Separate controller
IZT40, 41, 42

Integrated type
IZS41, 42

- **Can be mounted in narrow spaces**

Static neutralization of a rotary press

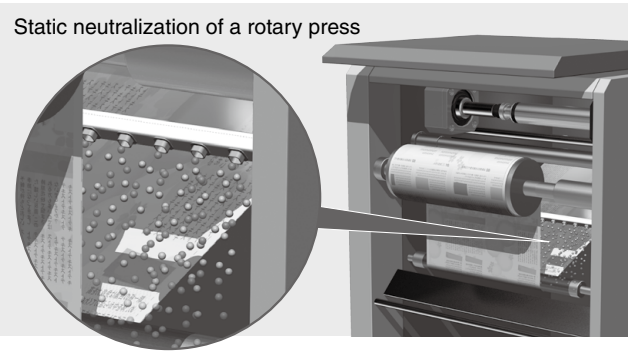

Static neutralization during wafer production

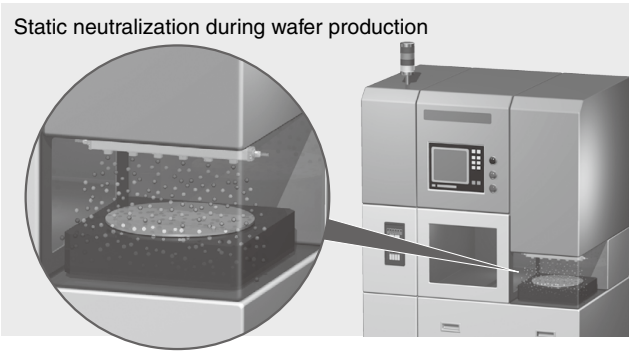

Space saving

Nozzle

Thickness 16 mm x Width 53 mm x Height 32 mm

- **For the removal of dust and static neutralization by air blow**

For the static neutralization of plastic bottles and particle elimination

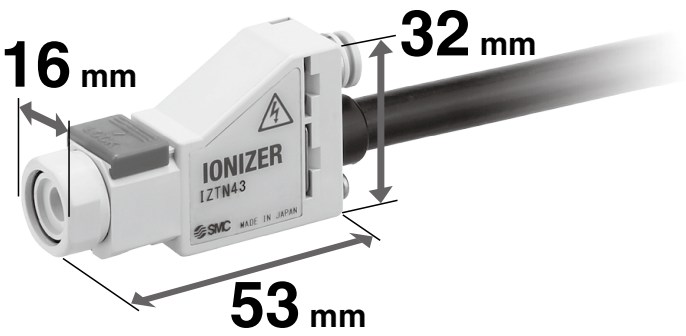

One controller can control up to 4 ionizers.

Bar Nozzle

- **Mixed bar and nozzle connection is possible.**

Concentrated control is available.

- **Bar and nozzle errors can be detected.**
- **Contamination of the emitter can be monitored.**

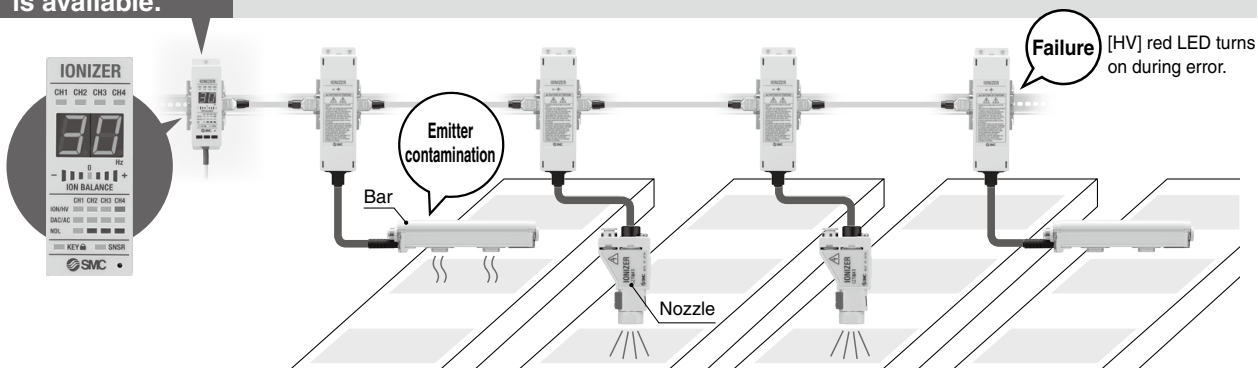

A flexible layout can be achieved due to the various module connection methods.

Bar Nozzle

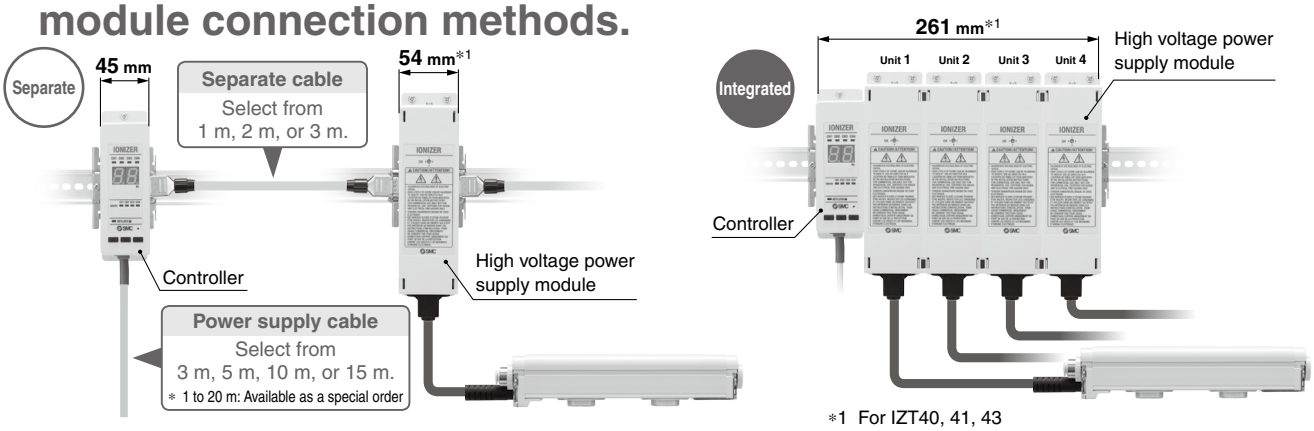

*1 For IZT40, 41, 43

- **Max. installation distance between controller and bar/nozzle: 15 m**

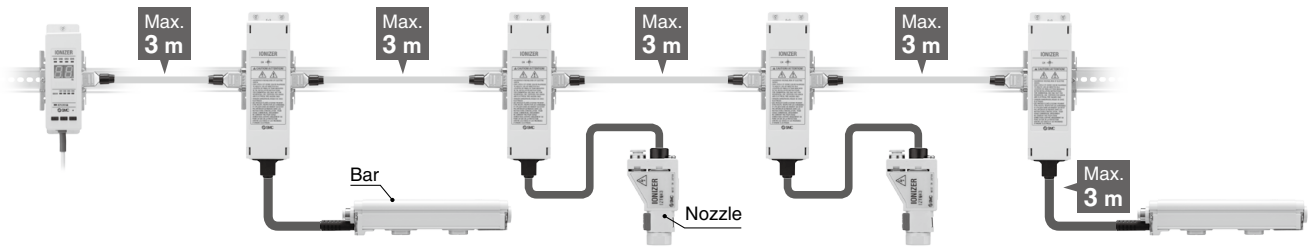

The simple installation of each module is possible by connector connection.

Bar Nozzle

- **The connector connection of cables is possible for each module after installation.**

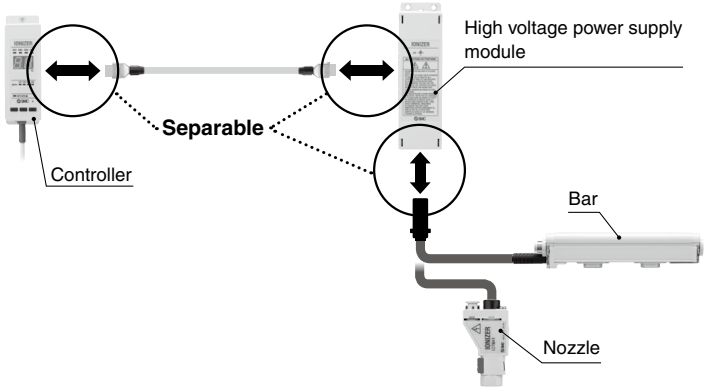

Easy insertion and removal due to connector connection

Bar Nozzle

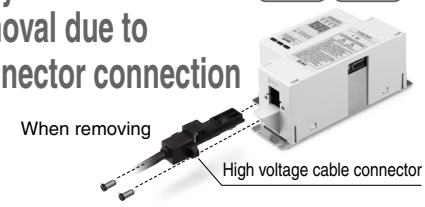

For the insertion and removal of high voltage cables

Nozzle

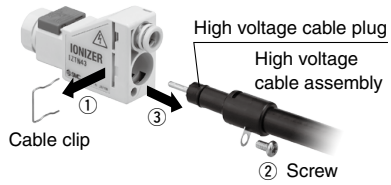

Bar Nozzle

Various low maintenance cartridges can be selected according to the application.

- **Minimizes the contamination of emitters by discharging compressed air at the surface of the emitters**

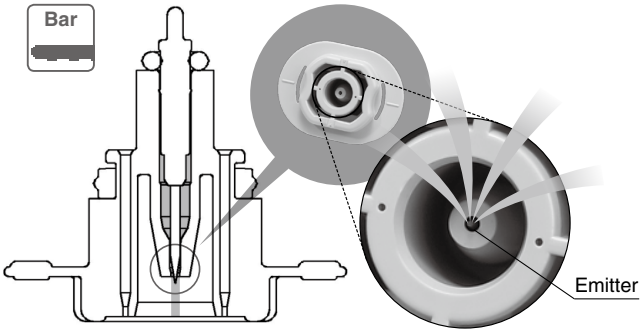

Air covers the emitter.

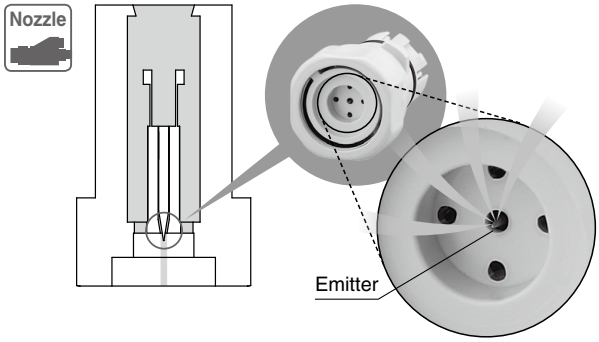

Air covers the emitter.

- **Emitter cartridge type**

	High speed static neutralization cartridge	Energy saving static neutralization cartridge
For Bar	**Long range static neutralization and dust removal** 1 cartridge equipped with 2 assist air nozzles allows for high speed static neutralization by transferring ionized air produced in the emitter to the workpiece.	**Short range static neutralization** Reducing the number of assist nozzles by half for static neutralization, which does not require a high volume of assist air due to the close distance to the object to be neutralized, allows for energy savings by reducing air consumption.
For Nozzle		

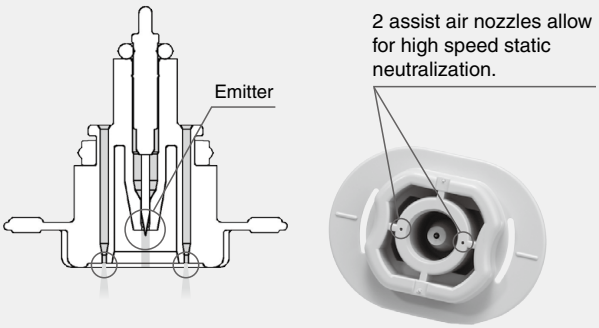

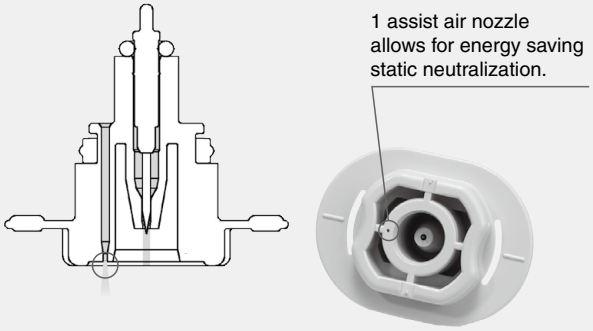

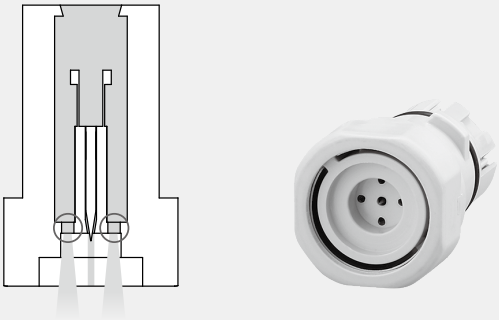

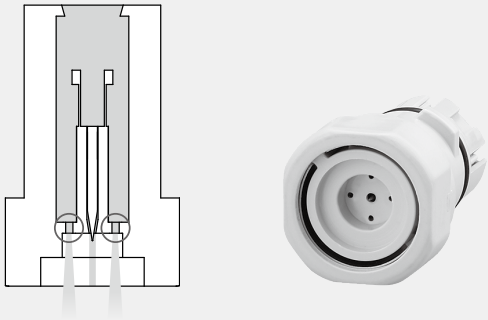

<For Nozzle> The external shape of the high speed static neutralization cartridge and that of the energy saving static neutralization cartridge is the same. However, as shown in the image above, the diameter of the holes differs.

● Emitter material type

Tungsten/Single crystal silicon (for silicon wafers)

Bar

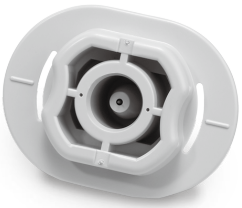

Tungsten
(Emitter cartridge color: White)

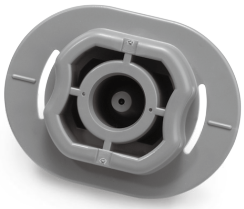

Silicon
(Emitter cartridge color: Gray)

Nozzle

Tungsten
(Emitter cartridge color: White)

Energy saving high-efficiency cartridge

Assist air amplified by the sucking in of ambient air (the ejector effect) allows for highly efficient static neutralization through the efficient transfer of the produced ionized air.

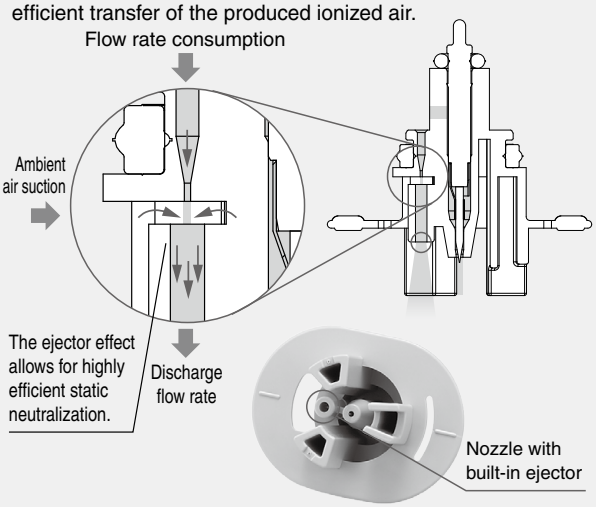

Flow rate for installation distance of each cartridge

Conditions: IZT41-112□ (Number of cartridges: 18 pcs.),
Discharge time 1 s

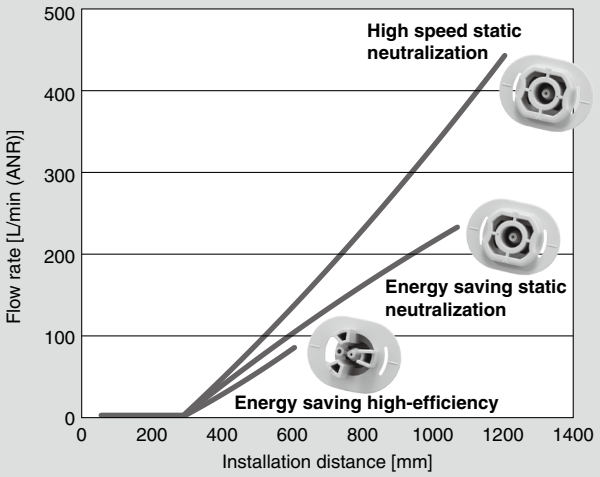

Flow rate for installation distance of each cartridge

Discharge time 1 s

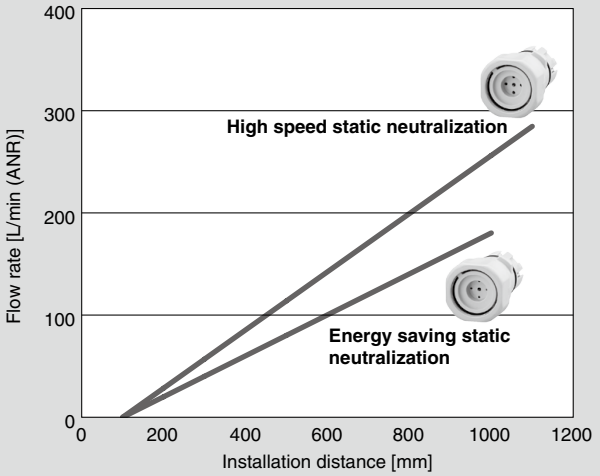

Air can be supplied by air piping on one side.

Bar

- **The optimal design of the piping port size allows for sufficient blow performance even with piping only on one side.**

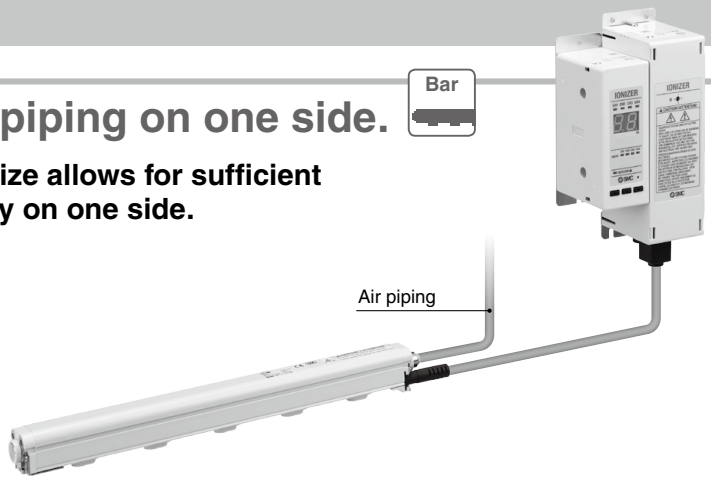

Piping on both sides
Piping only on one side

High speed static neutralization cartridge

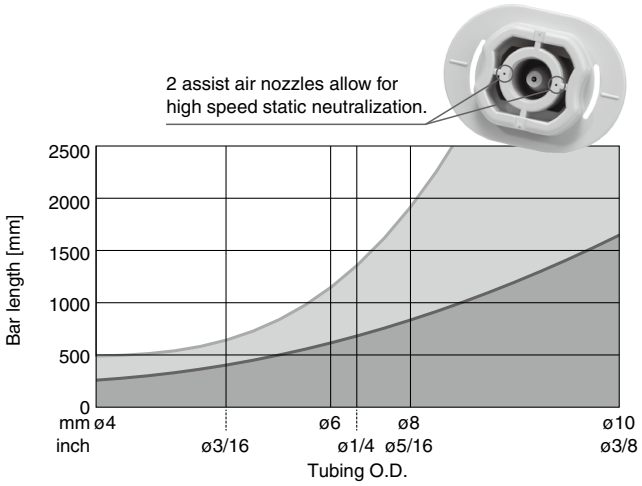

Energy saving static neutralization cartridge

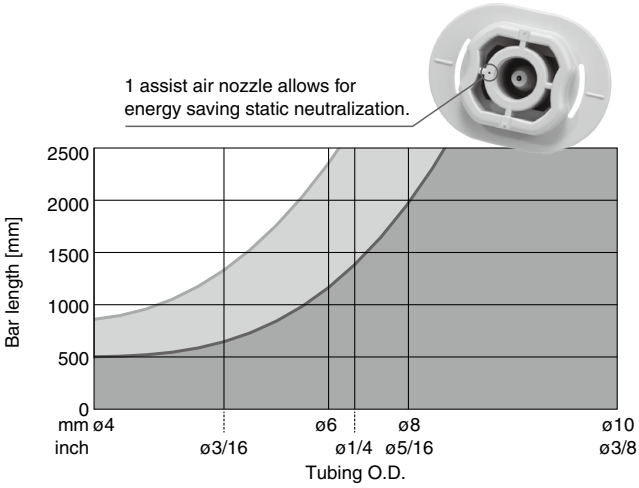

Energy saving high-efficiency cartridge

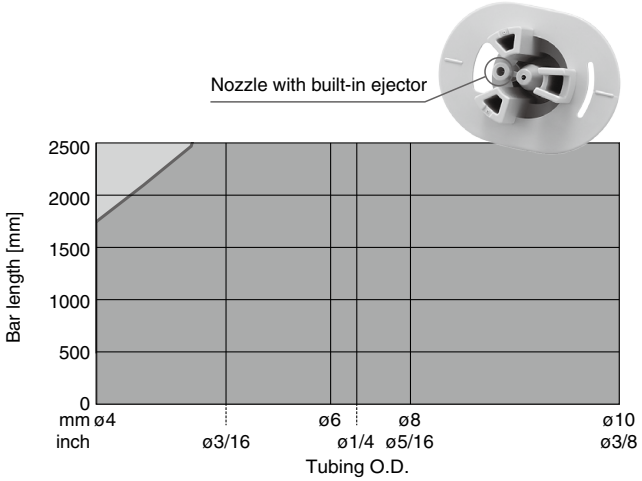

Air supply port position is selectable: Right side/ Left side/Both sides

Bar

Bar and high voltage cable lengths are selectable.

Bar Nozzle

pp. 69, 73, 95

Bar lengths in 60 mm increments are either available in standard lengths (see page 69) or non-standard lengths (-X10, see page 73) from 160 to 2500 mm. In addition, bar lengths exceeding 2500 mm up to 3040 mm are available in 60 mm increments as a special order product.

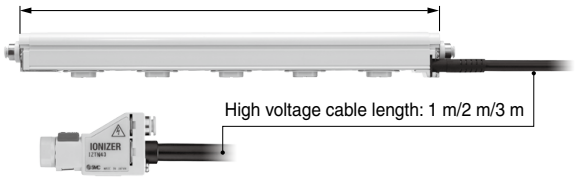

2 types of brackets are available.

Bar

For the bar type

■ When an adjustable mounting angle is required/Bracket 1

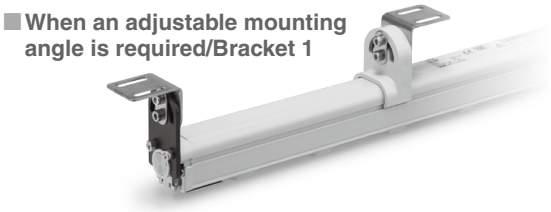

■ When space reduction is required/Bracket 2

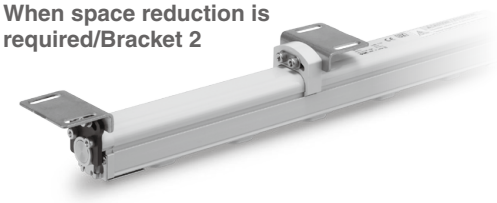

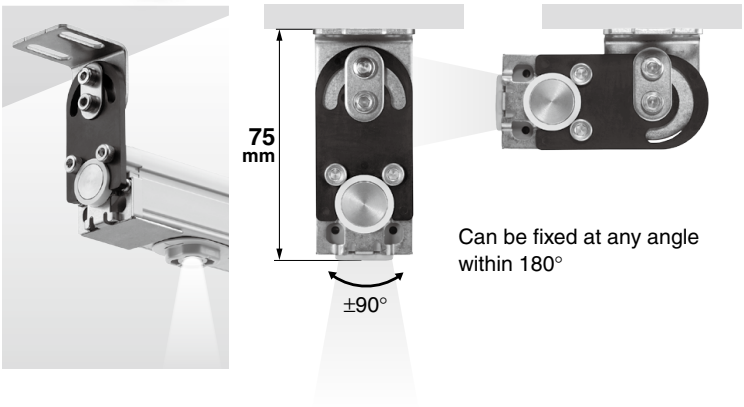

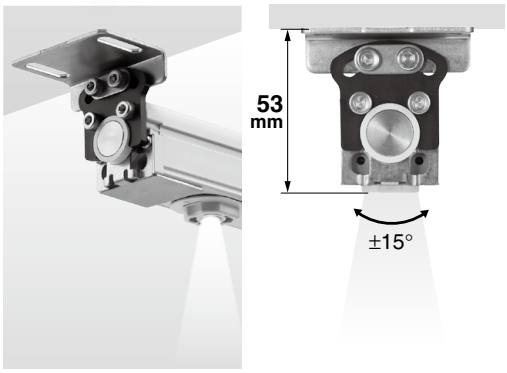

Nozzle

For the nozzle type

■ Angle adjustment bracket

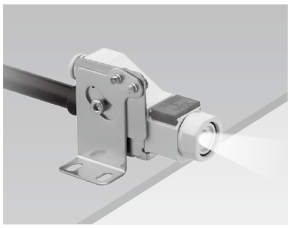

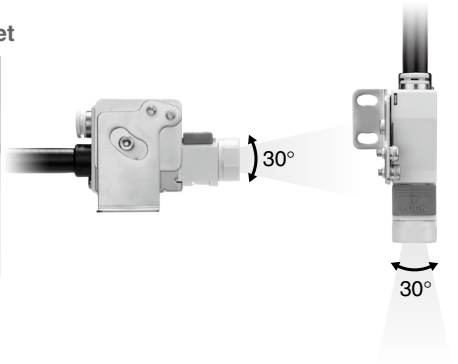

■ L-bracket

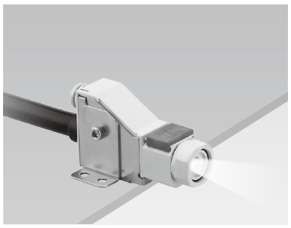

Emitter cartridge drop prevention

Bar Nozzle

● Emitter cartridge drop prevention function

Double-action locking

Bar type

Nozzle type

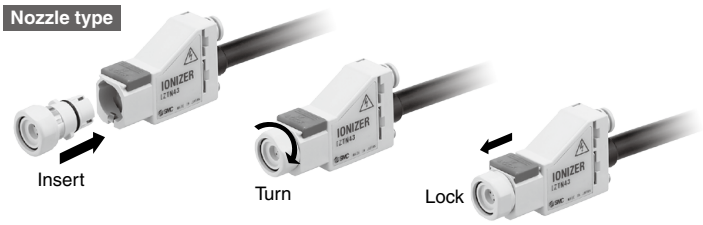

● Drop prevention cover Made to order

For the increased cartridge drop prevention

∗ Only for the bar type

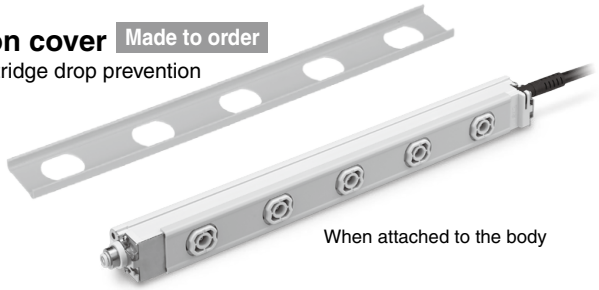

When attached to the body

IO-Link

IO-Link is an open communication interface technology between the sensor/actuator and the I/O terminal that is an international standard: IEC 61131-9.

Visualization of operation and equipment status/Remote monitoring and control by communication

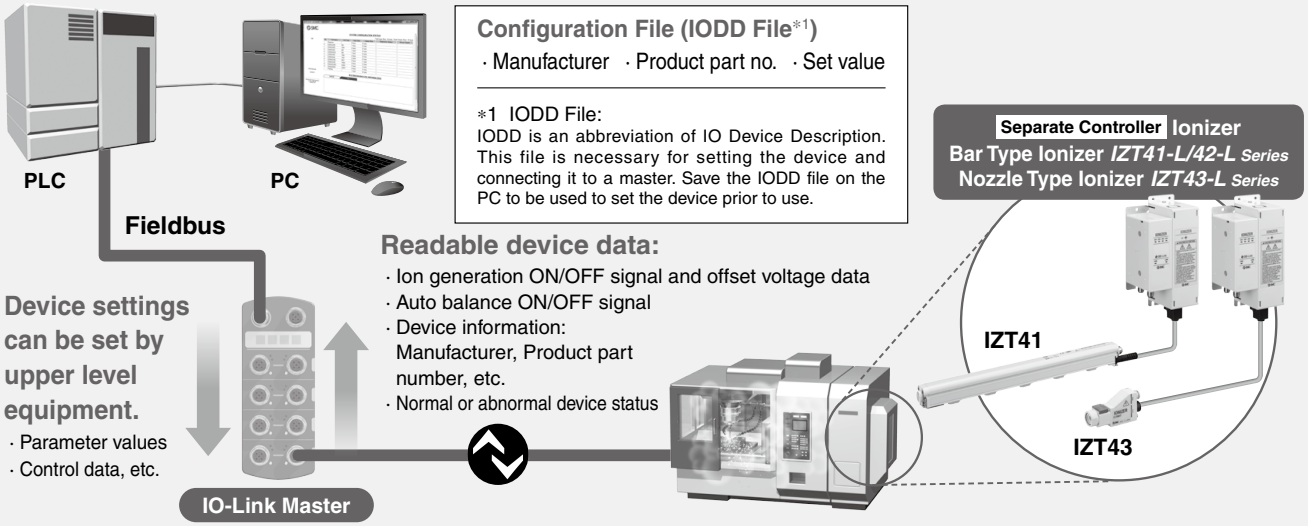

Automatic setting function [Data storage function]

When replacing the controller with another of the same type (the same device ID), the parameters (set values) stored in the IO-Link master are automatically copied (set) to the new controller.

Process Data

PD_IN

Bit offset	103	102	101	100	99	98	97	96
Item	CH1: Initial set status	CH2: Initial set status	CH3: Initial set status	CH4: Initial set status	CH1: Ion generation	CH2: Ion generation	CH3: Ion generation	CH4: Ion generation

Bit offset	95	94	93	92	91	90	89	88	87	86	85	84	83	82	81	80
Item	Reservation						CH1: Ion balance (10-bit signed integer)									
Bit offset	79	78	77	76	75	74	73	72	71	70	69	68	67	66	65	64
Item	Reservation						CH2: Ion balance (10-bit signed integer)									
Bit offset	63	62	61	60	59	58	57	56	55	54	53	52	51	50	49	48
Item	Reservation						CH3: Ion balance (10-bit signed integer)									
Bit offset	47	46	45	44	43	42	41	40	39	38	37	36	35	34	33	32
Item	Reservation						CH4: Ion balance (10-bit signed integer)									

It is possible to monitor the offset voltage value for each channel with the cyclic (periodic) data.

Bit offset	31	30	29	28	27	26	25	24
Item	Error diagnosis	CPU failure (Controller)	Power supply failure (Controller)	Power supply failure (High voltage power supply)	Non-connection of high voltage power supply module	Reservation		
Bit offset	23	22	21	20	19	18	17	16
Item	CH1: CPU failure	CH2: CPU failure	CH3: CPU failure	CH4: CPU failure	CH1: High voltage failure	CH2: High voltage failure	CH3: High voltage failure	CH4: High voltage failure
Bit offset	15	14	13	12	11	10	9	8
Item	CH1: Internal communication failure	CH2: Internal communication failure	CH3: Internal communication failure	CH4: Internal communication failure	CH1: Fan failure	CH2: Fan failure	CH3: Fan failure	CH4: Fan failure
Bit offset	7	6	5	4	3	2	1	0
Item	CH1: CH duplication failure	CH2: CH duplication failure	CH3: CH duplication failure	CH4: CH duplication failure	CH1: Maintenance notification	CH2: Maintenance notification	CH3: Maintenance notification	CH4: Maintenance notification

It is possible to find problems with the equipment in detail for each channel with the cyclic (periodic) data.

PD_OUT

Bit offset	71	70	69	68	67	66	65	64
Item	PD_OUT Valid/Invalid	Reservation			CH1: Ion generation	CH2: Ion generation	CH3: Ion generation	CH4: Ion generation

Bit offset	63	62	61	60	59	58	57	56	55	54	53	52	51	50	49	48
Item	Reservation						CH1: Offset voltage adjustment (10-bit signed integer)									
Bit offset	47	46	45	44	43	42	41	40	39	38	37	36	35	34	33	32
Item	Reservation						CH2: Offset voltage adjustment (10-bit signed integer)									
Bit offset	31	30	29	28	27	26	25	24	23	22	21	20	19	18	17	16
Item	Reservation						CH3: Offset voltage adjustment (10-bit signed integer)									
Bit offset	15	14	13	12	11	10	9	8	7	6	5	4	3	2	1	0
Item	Reservation						CH4: Offset voltage adjustment (10-bit signed integer)									

It is possible to adjust the offset voltage for each channel with the cyclic (periodic) data.

<Models and Functions>

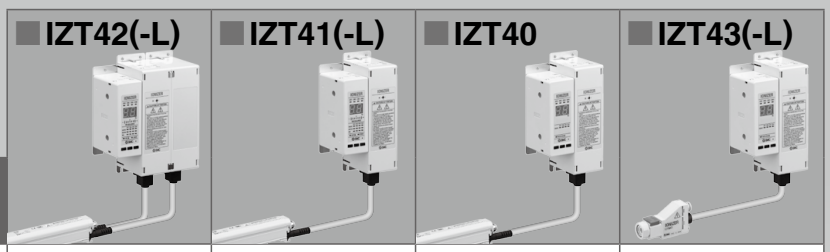

Series			IZT42(-L)	IZT41(-L)	IZT40	IZT43(-L)
Method of applying voltage			Dual AC	AC, DC*1	AC, DC*1	AC, DC*1
Auto balance			●	●	—	●
I/O			NPN/PNP (IZT42) IO-Link (IZT42-L)	NPN/PNP (IZT41) IO-Link (IZT41-L)	—	NPN/PNP (IZT43) IO-Link (IZT43-L)
Ion balance display			●	●	—	●
High voltage abnormality detection			●	●	●	●
Maintenance detection			●	●	—	●
Low maintenance emitter			●	●	●	●
Emitter cartridge	High speed static neutralization	For Bar	●	●	●	—
		For Nozzle	—	—	—	●
	Energy saving static neutralization	For Bar	●	●	●	—
		For Nozzle	—	—	—	●
	Energy saving high-efficiency	For Bar	●	●	●	—
One-touch fitting	Metric size		ø4, ø6, ø8, ø10	ø4, ø6, ø8, ø10	ø4, ø6, ø8, ø10	ø6
	Inch size		ø3/16", ø1/4", ø5/16", ø3/8"	ø3/16", ø1/4", ø5/16", ø3/8"	ø3/16", ø1/4", ø5/16", ø3/8"	ø1/4"
Bracket mounting			●	●	●	●
Made to order p. 73 • Non-standard bar length (-X10) • Model with emitter cartridge drop prevention cover (-X14)			●	●	●	—

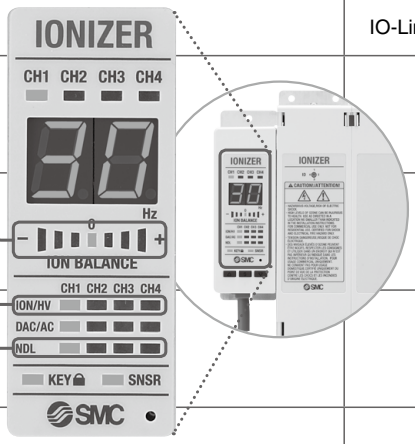

*1 Apply cathode or anode to DC.

<Accessories (for Individual Parts)>

Series		IZT42(-L)	IZT41(-L)	IZT40	IZT43(-L)
Emitter cartridge	For Bar High speed static neutralization / Energy saving static neutralization / Energy saving high-efficiency Cartridge color: White, Gray Emitter material: Tungsten, Silicon	●	●	●	—
pp. 77, 99	For Nozzle Tungsten (Color: White)	—	—	—	●
Bracket	For Bar End ①, Intermediate ①, Intermediate ②, End ②	●	●	●	—
pp. 77, 99	For Nozzle Angle adjustment, L-bracket	—	—	—	●
Power supply cable (For transistor input/output) pp. 77, 99		● (IZT42)	● (IZT41)	●	● (IZT43)
Power supply cable (For IO-Link) pp. 77, 99		● (IZT42-L)	● (IZT41-L)	—	● (IZT43-L)
Communication cable (For IO-Link) pp. 77, 99		● (IZT42-L)	● (IZT41-L)	—	● (IZT43-L)
DIN rail mounting bracket for controller and high voltage power supply module pp. 77, 99	For Controller, For High voltage power supply module, For IZT40/41/43, For IZT42	●	●	●	●
High voltage cable holder pp. 77, 99	Straight, Elbow	●	●	●	●
Drop prevention cover (Only for the bar type) p. 78		●	●	●	—
AC adapter*1, *2 pp. 78, 100		● (IZT42)	● (IZT41)	● (IZT40)	● (IZT43)
Separate cable pp. 78, 100		●	●	●	●
Cleaning kit pp. 78, 100	For Bar	●	●	●	—
	For Nozzle	—	—	—	●
High voltage cable assembly (For Nozzle) p. 100		—	—	—	●
Body assembly (For Nozzle) p. 100		—	—	—	●

*1 Only for use with 1 ionizer bar/nozzle *2 Cannot be used when the input/output specification is IO-Link

<Application Examples: Bar Type>

For the static neutralization of resin frames

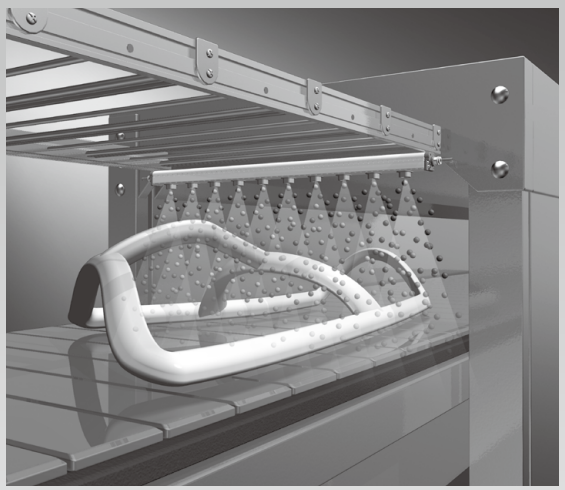

For the static neutralization of film-molded goods

- Prevents goods from adhering to the conveyer
- Prevents the dispersion of finished goods

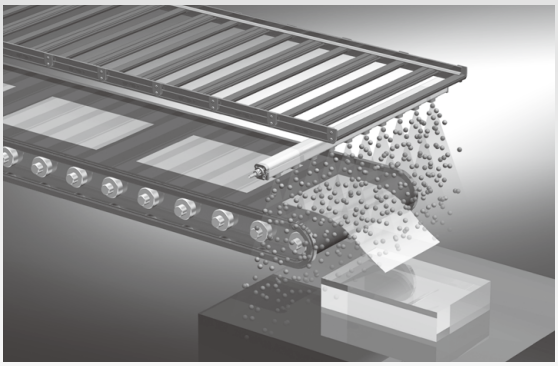

For the static neutralization of substrate cutting machines

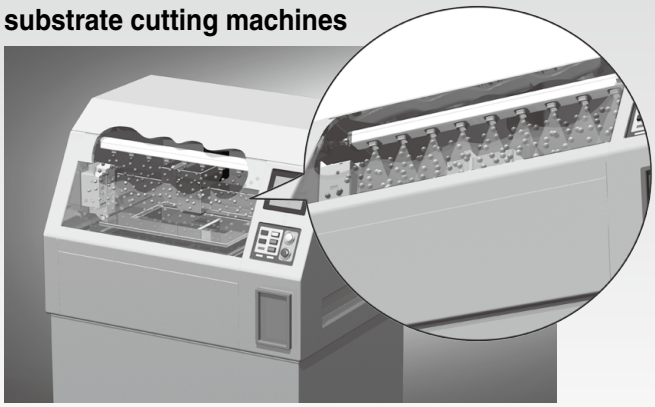

For the static neutralization of packing films

- Prevents the filled substances from adhering to packing films
- Reduces packing mistakes

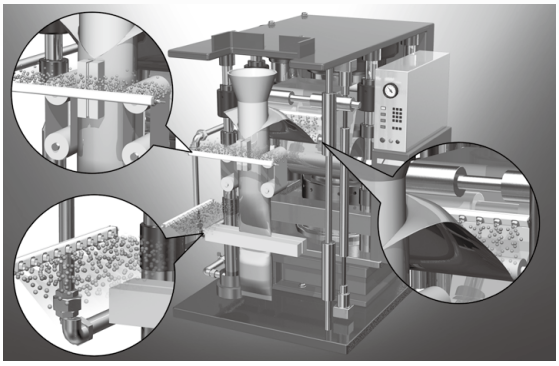

For the static neutralization during wafer transfer

- Prevents breakage due to discharge between wafers and hands

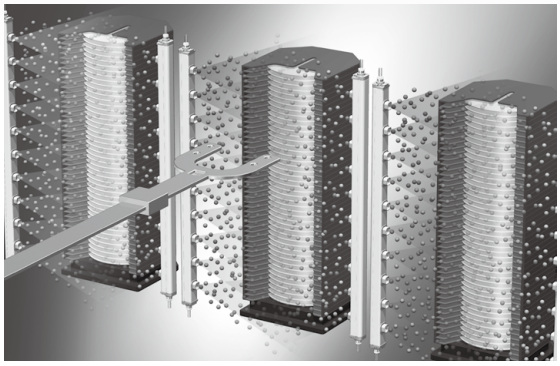

For the static neutralization of glass substrates

- Prevents the breakage of glass substrates by the static electricity generated when the substrate is lifted from the surface plate

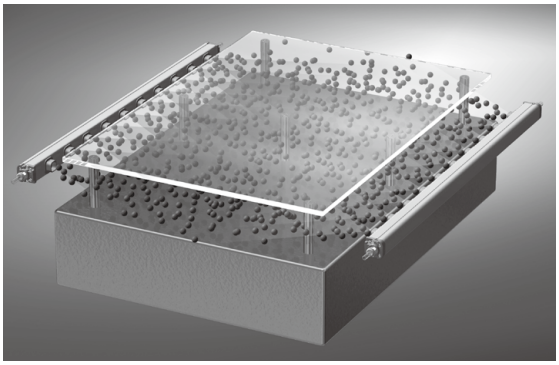

For the static neutralization of lenses

- Removes dust from lenses
- Prevents the adhesion of dust

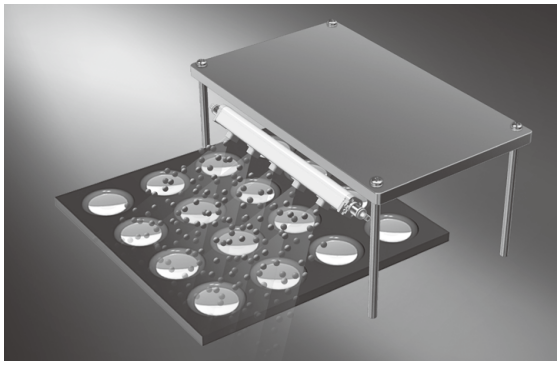

<Application Examples: Nozzle Type>

For the static neutralization of caps

• Removes dust from caps and prevents the adhesion of dust

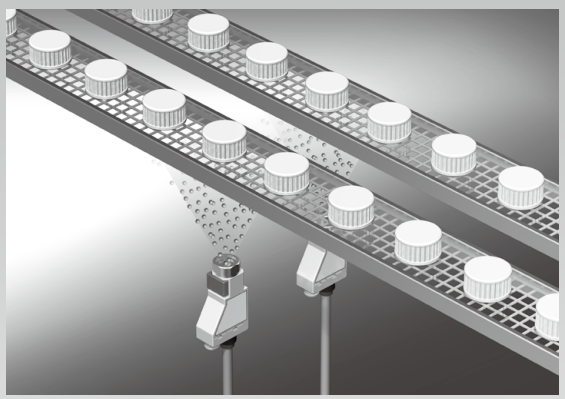

For the static neutralization of films

• Prevents the adhesion of dust
• Prevents winding failure due to wrinkles, etc.

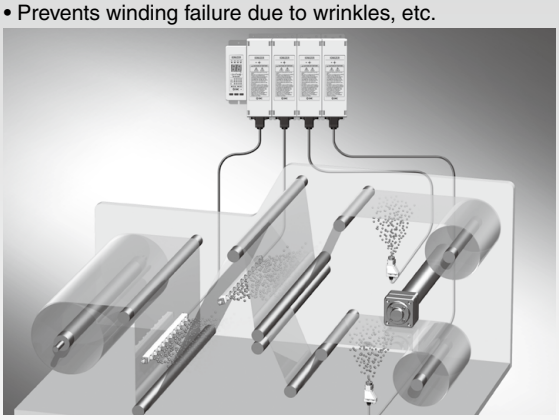

For the spot type static neutralization

• Prevents the electrostatic breakdown of electric parts
• Prevents detachment failure

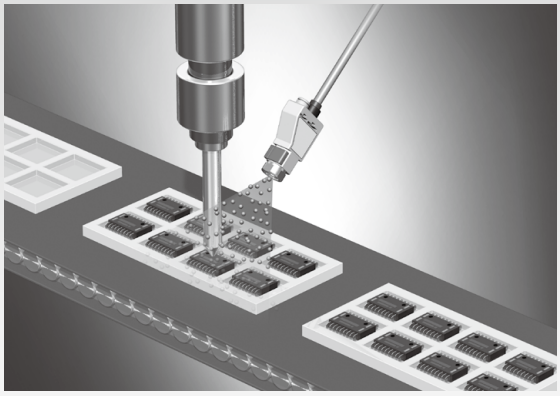

For the static neutralization of parts feeders

• Prevents the clogging of parts feeders

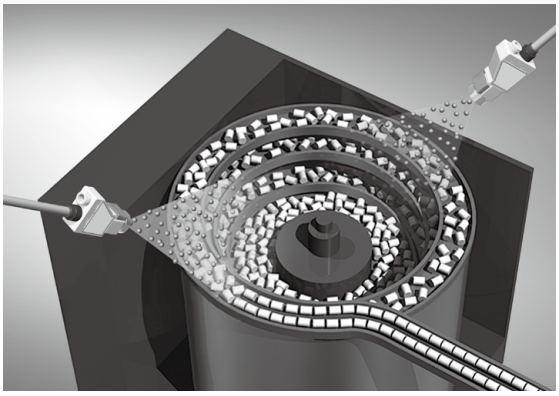

For the static neutralization of electric substrates

• Prevents the electrostatic breakdown of electric parts

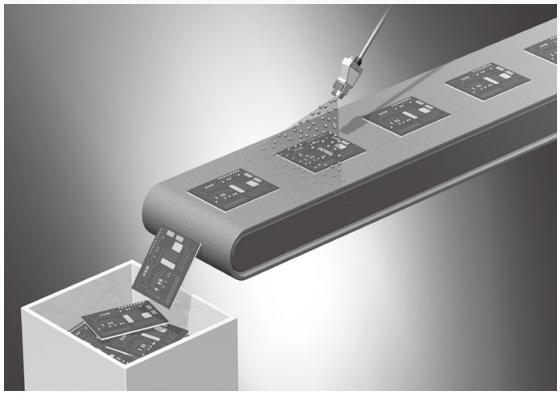

For the removal of dust when detaching from film

• Removes dust generated by static electricity when detaching from film

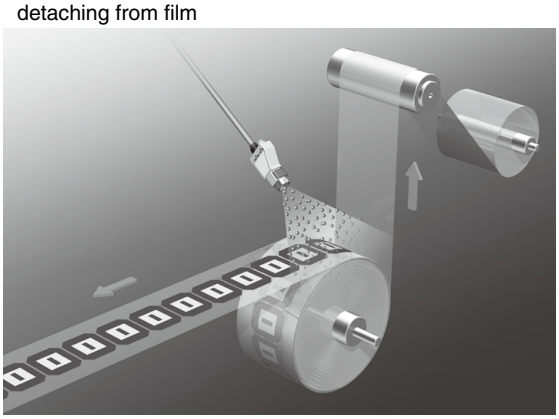

For the prevention of punching press sticking

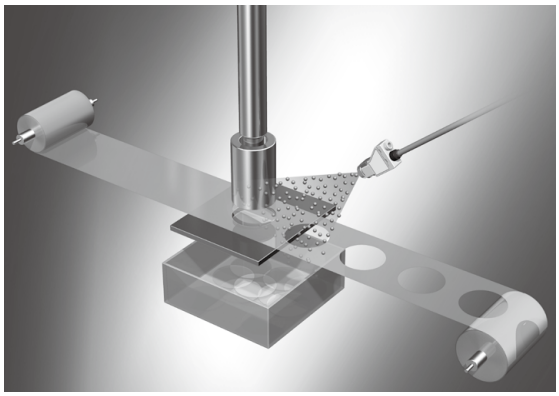

CONTENTS

Separate Controller Bar Type/Nozzle Type Ionizer
IZT40/41(-L)/42(-L)/43(-L) Series

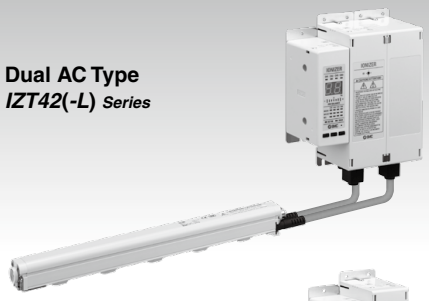

Dual AC Type
IZT42(-L) Series

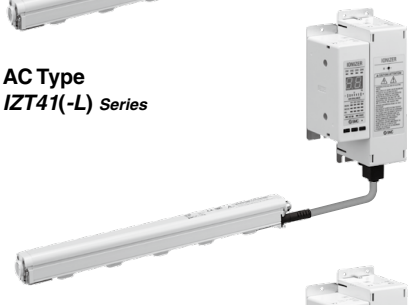

AC Type
IZT41(-L) Series

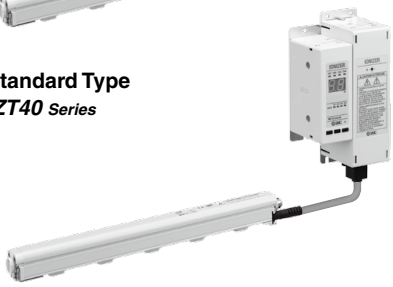

Standard Type
IZT40 Series

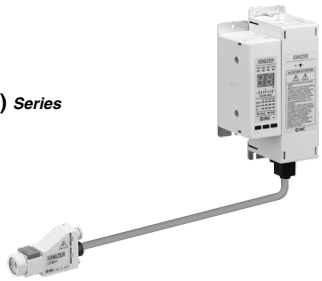

AC Type
IZT43(-L) Series

Separate Controller

Bar Type Ionizer IZT40/41(-L)/42(-L) Series

Technical Data: Static Neutralization Characteristics
① Installation Distance and Discharge Time ..... p. 63
② Static Neutralization Range ..... p. 64
③ Potential Amplitude ..... p. 67
④ Pressure — Flow Rate Characteristics ..... p. 68
How to Order
Bar + High Voltage Power Supply Module + Controller ..... p. 69
For Individual Parts (Bar/Controller/High Voltage Power Supply Module) ..... p. 71
Made to Order ..... p. 73
Specifications ..... p. 74
Construction ..... p. 76
Accessories (for Individual Parts) ..... p. 77
Accessories Sold Separately ..... p. 78
Wiring: IZT40, 41(-L), 42(-L) ..... p. 79
Wiring Circuit: IZT40 ..... p. 79
Wiring Circuit: IZT41, 42 ..... p. 80
Wiring Circuit: IZT41-L, 42-L ..... p. 81
Dimensions
IZT40, 41(-L) ..... p. 82
IZT42(-L) ..... p. 84
Controller ..... p. 85
High Voltage Power Supply Module ..... p. 87
Cable ..... p. 89

Separate Controller

Nozzle Type Ionizer IZT43(-L) Series

Technical Data: Static Neutralization Characteristics
① Installation Distance and Discharge Time ..... p. 93
② Static Neutralization Range ..... p. 93
③ Pressure — Flow Rate Characteristics ..... p. 94
How to Order
Nozzle + High Voltage Power Supply Module + Controller ..... p. 95
For Individual Parts (Nozzle/Controller/High Voltage Power Supply Module) ..... p. 96
Specifications ..... p. 97
Construction ..... p. 98
Accessories (for Individual Parts) ..... p. 99
Accessories Sold Separately ..... p. 100
Wiring: IZT43(-L) ..... p. 101
Wiring Circuit: IZT43-L ..... p. 101
Wiring Circuit: IZT43 ..... p. 102
Dimensions
IZT43(-L) ..... p. 103
Controller ..... p. 105
High Voltage Power Supply Module ..... p. 107
Cable ..... p. 108

Specific Product Precautions ..... p. 111

IZT40/41(-L)/42(-L) Series
Technical Data

Static Neutralization Characteristics

＊ Static neutralization characteristics are based on data using a charged plate (Dimensions: 150 mm x 150 mm, Capacitance: 20 pF) as defined in the U.S. ANSI standards (ANSI/ESD STM3.1-2015). Use this data only as a guideline for model selection because the values vary depending on the material and/or size of the subject.

① Installation Distance and Discharge Time (Discharge Time from 1000 V to 100 V)

IZT40, 41 AC Mode | **IZT42 Dual AC Mode**

For cartridges without air purge

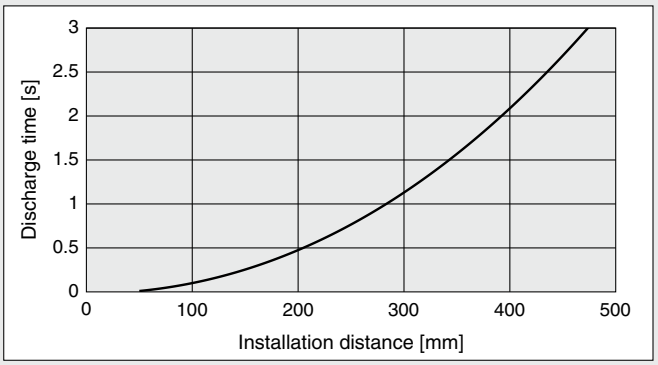

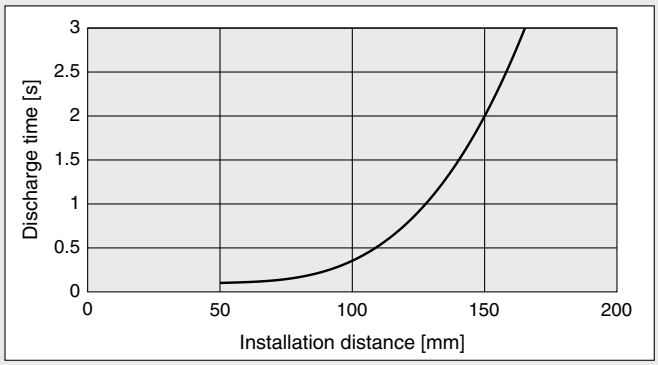

High speed static neutralization cartridge

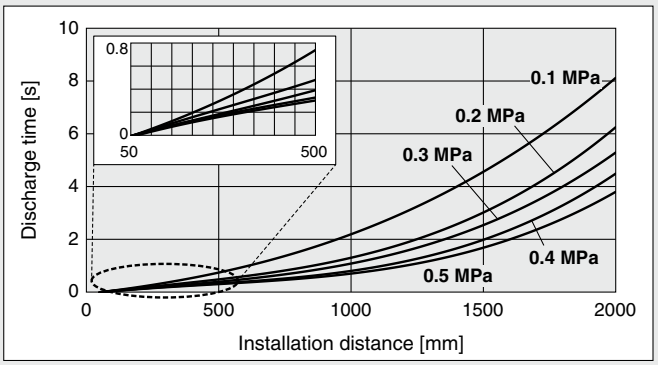

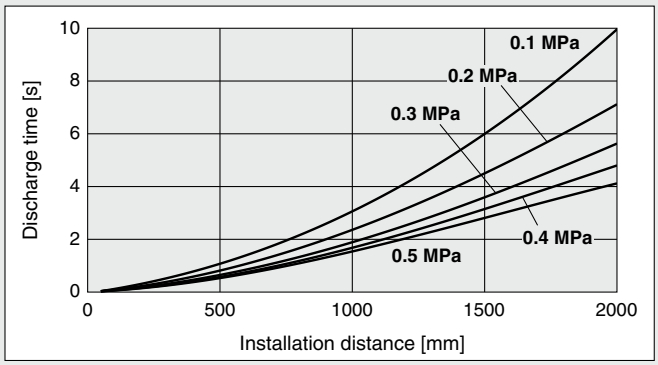

Energy saving static neutralization cartridge

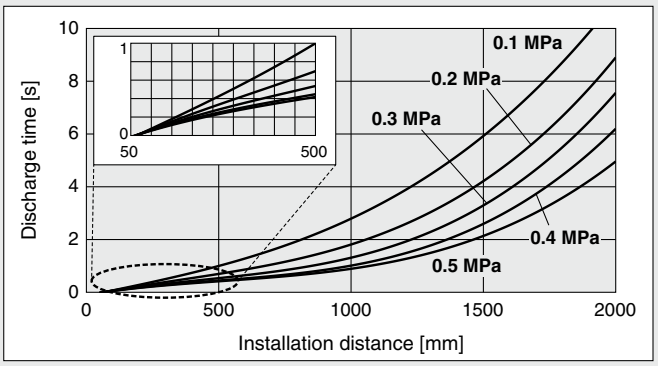

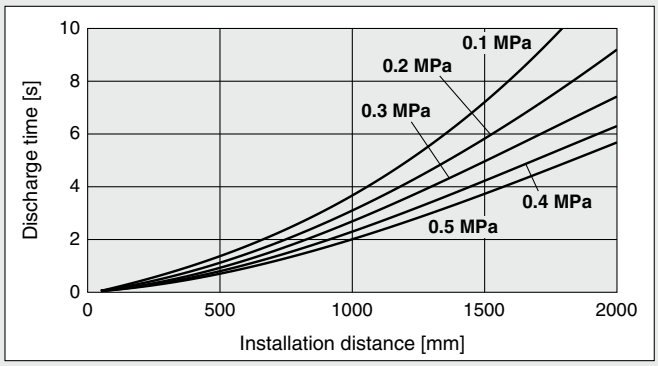

Energy saving high-efficiency cartridge

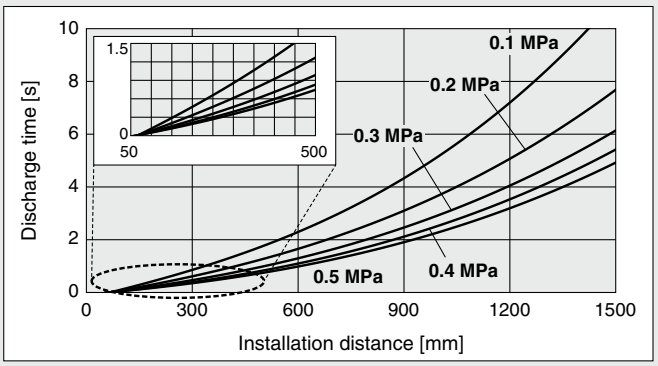

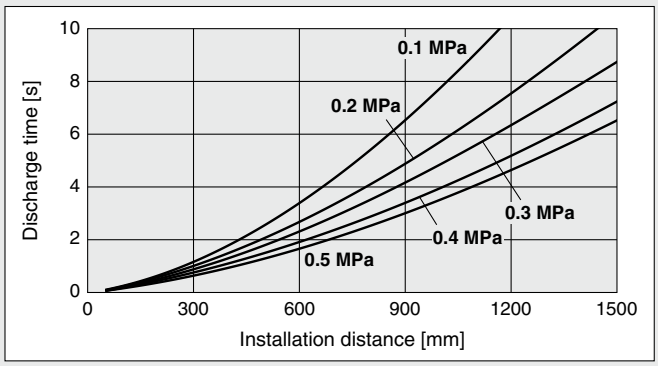

Static Neutralization Characteristics

＊ Static neutralization characteristics are based on data using a charged plate (Dimensions: 150 mm x 150 mm, Capacitance: 20 pF) as defined in the U.S. ANSI standards (ANSI/ESD STM3.1-2015). Use this data only as a guideline for model selection because the values vary depending on the material and/or size of the subject.

②Static Neutralization Range (Discharge Time from 1000 V to 100 V)

IZT40, 41 Ion Generation Frequency: 30 Hz

1) For cartridges without air purge

For IZT40-□D, L, V
For IZT41-□D, L, V

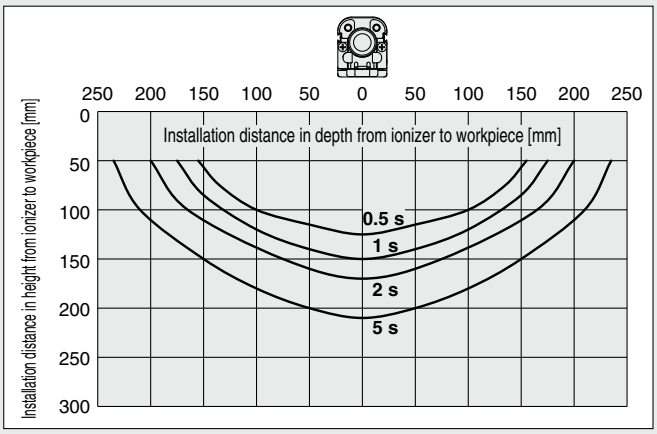

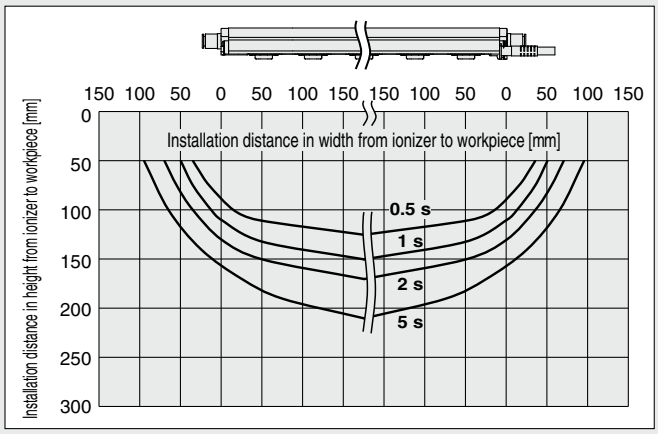

2) High speed static neutralization cartridge, Supply pressure: 0.3 MPa

For IZT40-□D
For IZT41-□D

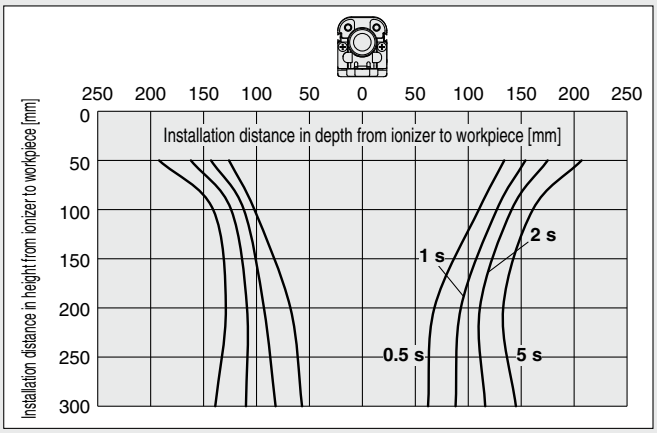

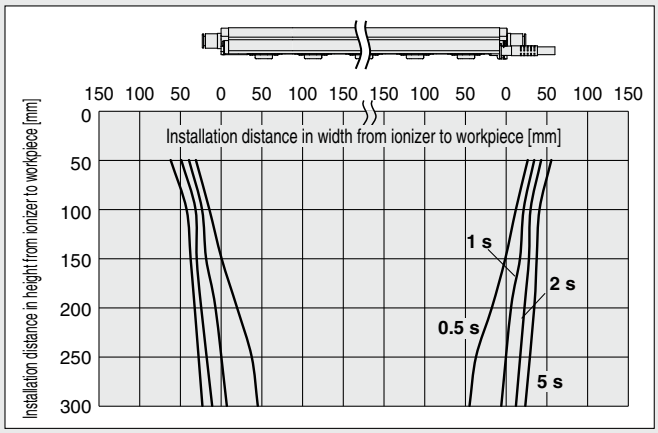

3) Energy saving static neutralization cartridge, Supply pressure: 0.3 MPa

For IZT40-□L
For IZT41-□L

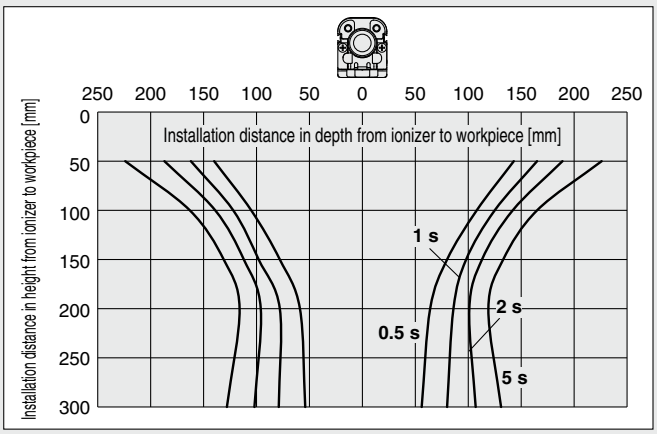

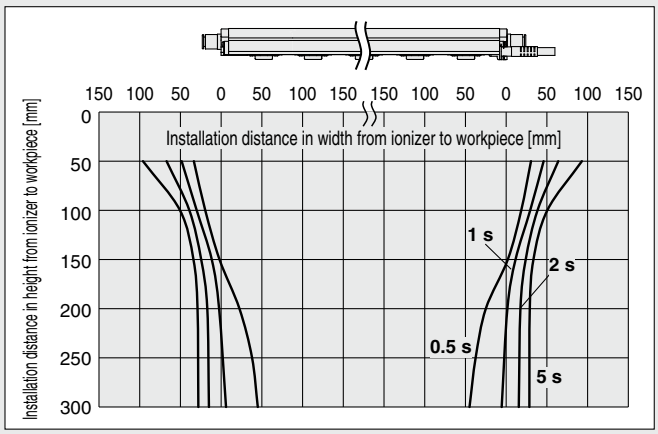

Static Neutralization Characteristics

* Static neutralization characteristics are based on data using a charged plate (Dimensions: 150 mm x 150 mm, Capacitance: 20 pF) as defined in the U.S. ANSI standards (ANSI/ESD STM3.1-2015). Use this data only as a guideline for model selection because the values vary depending on the material and/or size of the subject.

② Static Neutralization Range (Discharge Time from 1000 V to 100 V)

IZT40, 41 Ion Generation Frequency: 30 Hz

4) Energy saving high-efficiency cartridge, Supply pressure: 0.3 MPa

For IZT40-□V
For IZT41-□V

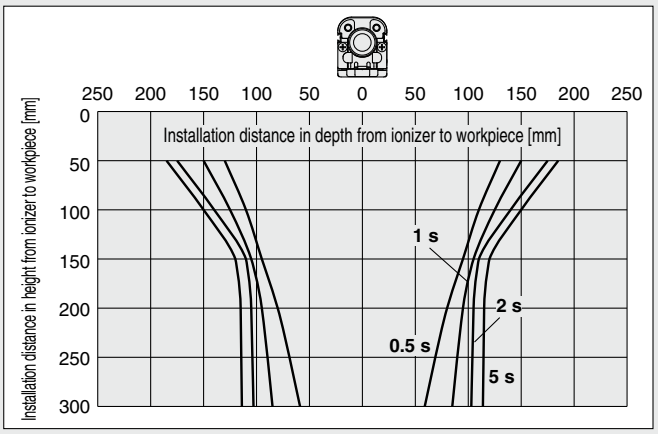

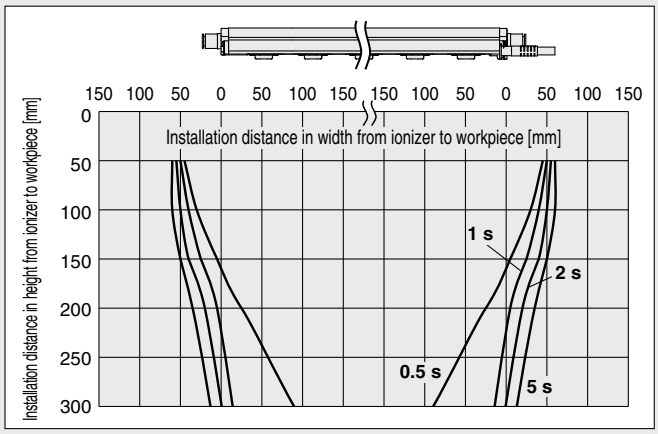

IZT42 Ion Generation Frequency: 30 Hz

1) For cartridges without air purge

For IZT42-□D, L, V

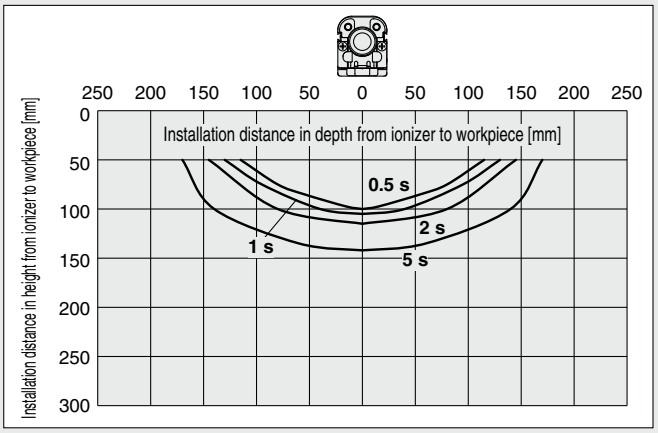

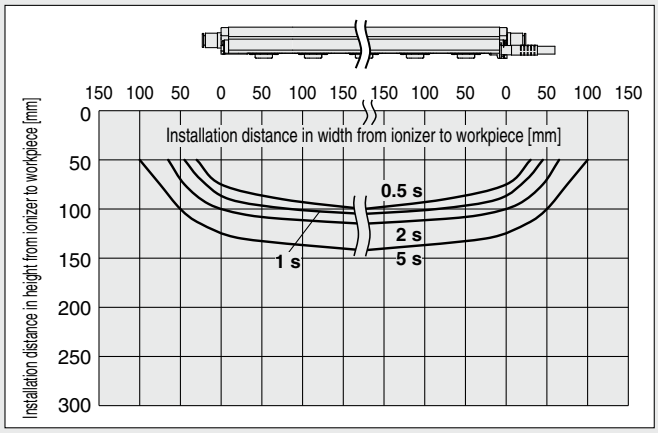

2) High speed static neutralization cartridge, Supply pressure: 0.3 MPa

For IZT42-□D

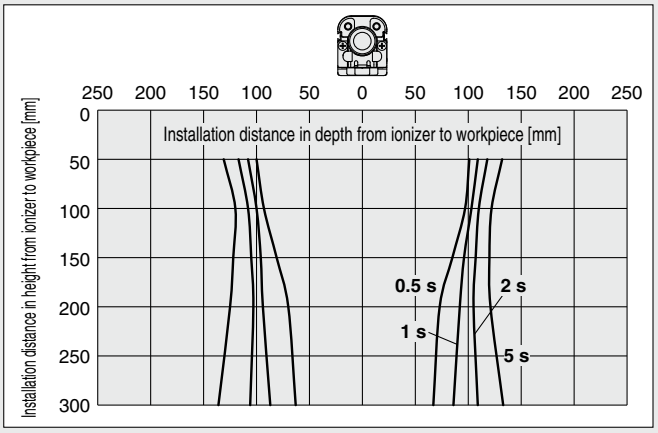

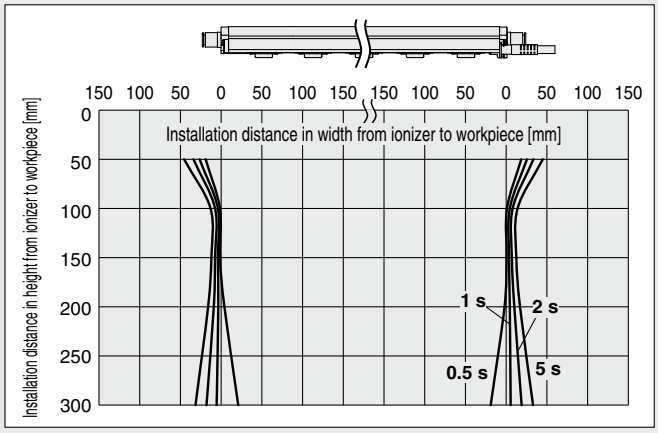

Static Neutralization Characteristics

＊ Static neutralization characteristics are based on data using a charged plate (Dimensions: 150 mm x 150 mm, Capacitance: 20 pF) as defined in the U.S. ANSI standards (ANSI/ESD STM3.1-2015). Use this data only as a guideline for model selection because the values vary depending on the material and/or size of the subject.

②Static Neutralization Range (Discharge Time from 1000 V to 100 V)

IZT42 Ion Generation Frequency: 30 Hz

3) Energy saving static neutralization cartridge, Supply pressure: 0.3 MPa

For IZT42-□L

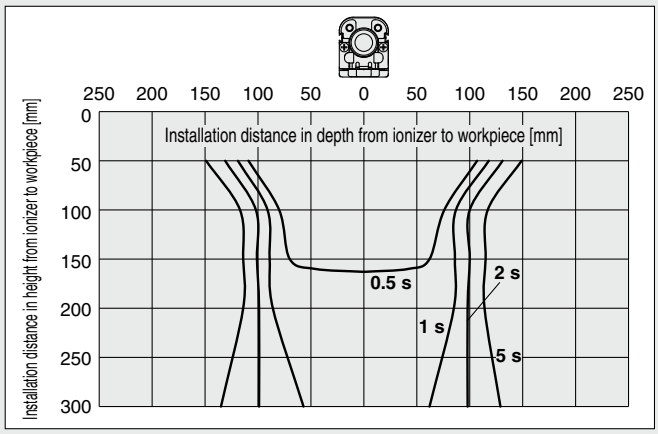

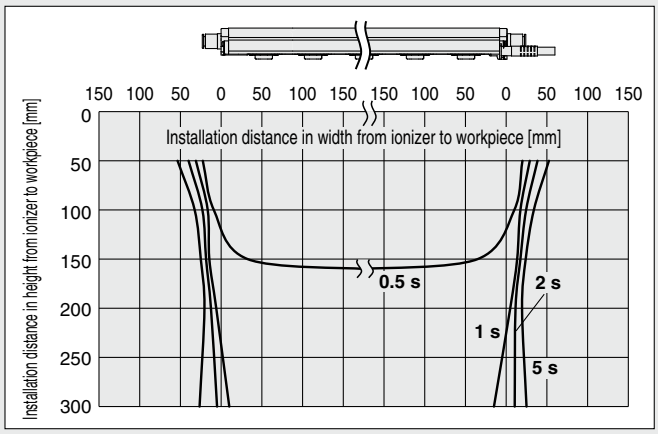

4) Energy saving high-efficiency cartridge, Supply pressure: 0.3 MPa

For IZT42-□V

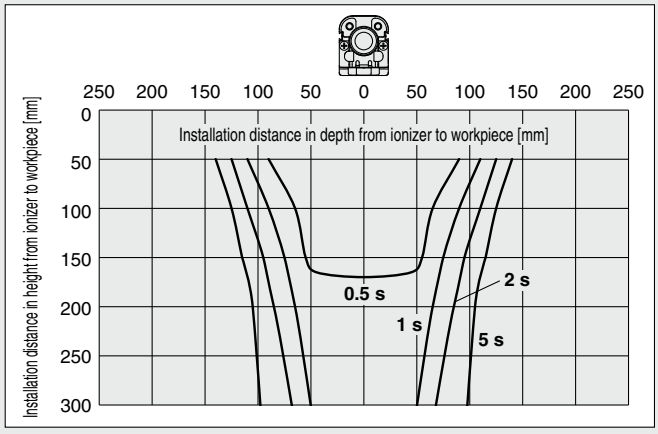

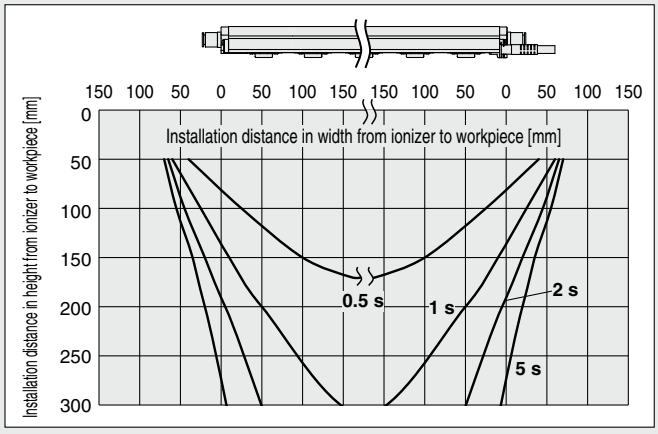

Static Neutralization Characteristics

* Static neutralization characteristics are based on data using a charged plate (Dimensions: 150 mm x 150 mm, Capacitance: 20 pF) as defined in the U.S. ANSI standards (ANSI/ESD STM3.1-2015). Use this data only as a guideline for model selection because the values vary depending on the material and/or size of the subject.

③ Potential Amplitude

IZT40, 41 Supply Pressure: 0.3 MPa

IZT42 Supply Pressure: 0.3 MPa

High speed static neutralization cartridge

For IZT40-112D
For IZT41-112D

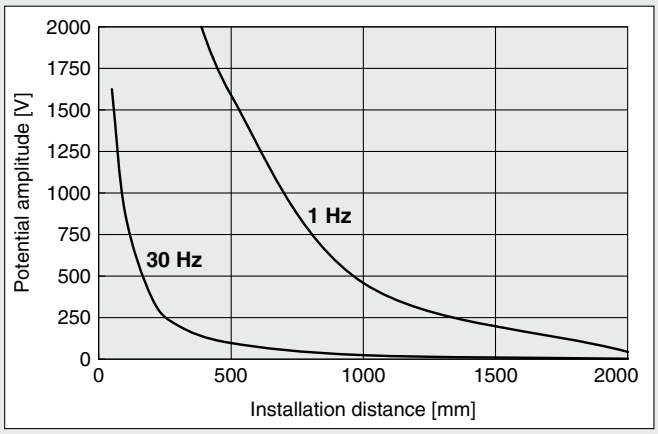

For IZT42-112D

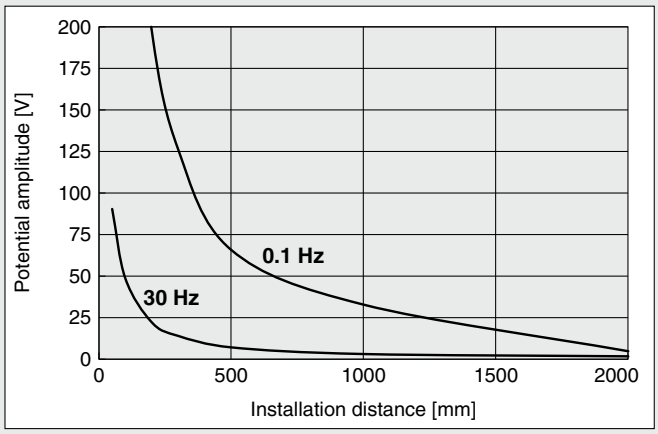

Energy saving static neutralization cartridge

For IZT40-112L
For IZT41-112L

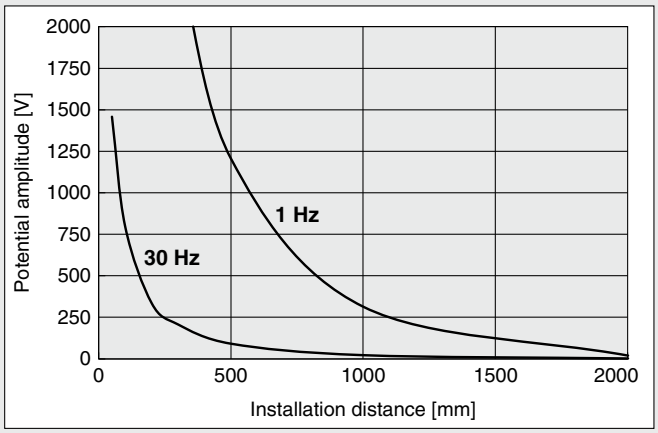

For IZT42-112L

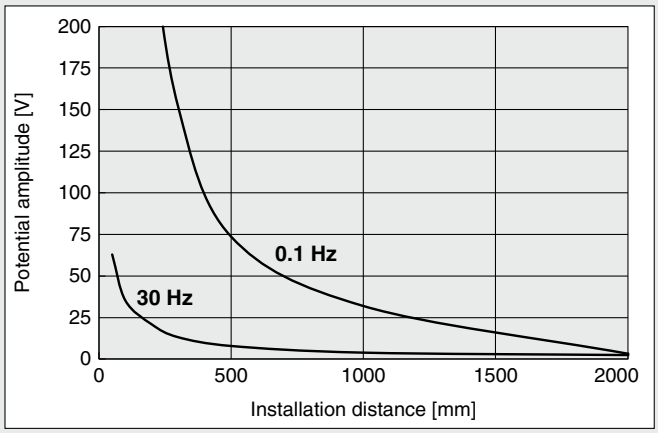

Energy saving high-efficiency cartridge

For IZT40-112V
For IZT41-112V

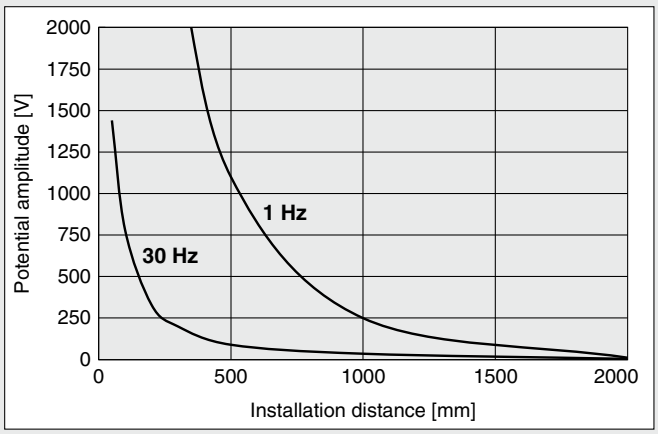

For IZT42-112V

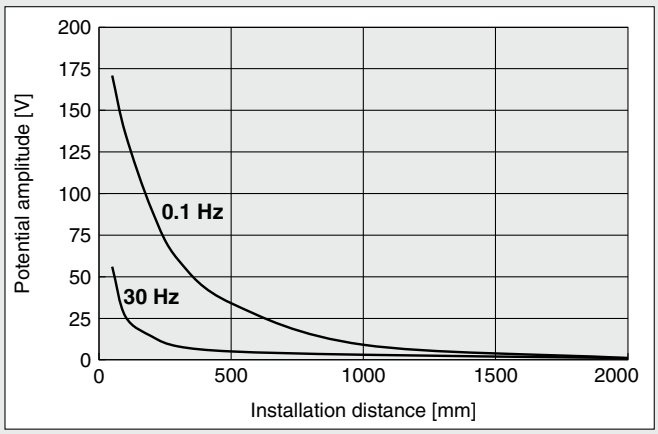

Static Neutralization Characteristics

* Static neutralization characteristics are based on data using a charged plate (Dimensions: 150 mm x 150 mm, Capacitance: 20 pF) as defined in the U.S. ANSI standards (ANSI/ESD STM3.1-2015). Use this data only as a guideline for model selection because the values vary depending on the material and/or size of the subject.

④ Pressure — Flow Rate Characteristics

High speed static neutralization cartridge

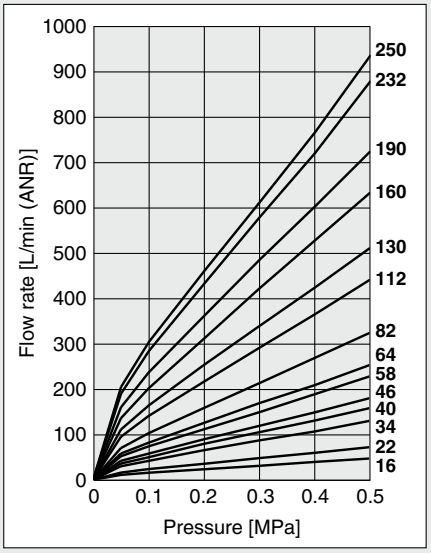

Energy saving static neutralization cartridge

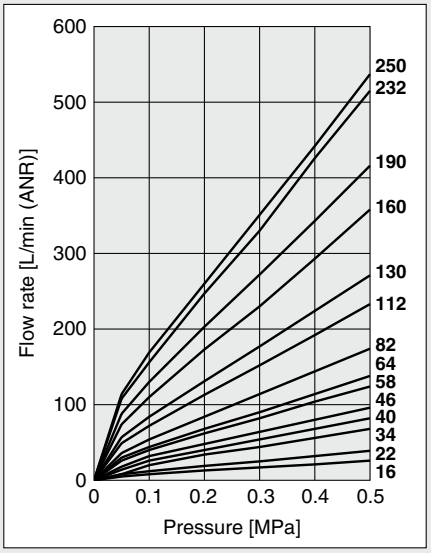

Energy saving high-efficiency cartridge

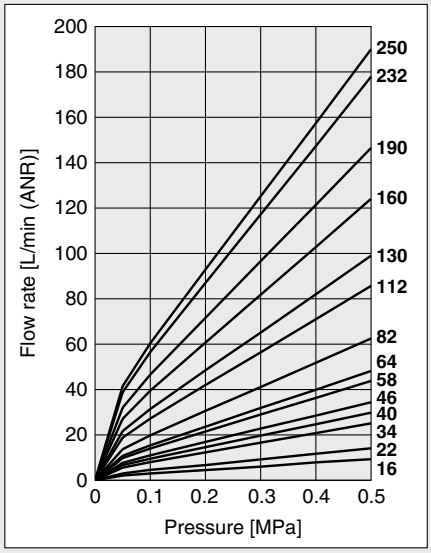

How to measure

a) Air supply from one side

IZT40, IZT41, IZT42 -16, 22, 34, 40, 46, 58 Connecting tube: O.D. ø6 x I.D. ø4

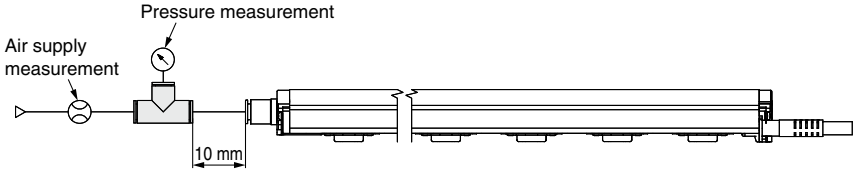

b) Air supply from both sides

IZT40, IZT41, IZT42 -64, 82, 112 Connecting tube: O.D. ø6 x I.D. ø4

IZT40, IZT41, IZT42 -130, 160, 190 Connecting tube: O.D. ø8 x I.D. ø5

IZT40, IZT41, IZT42 -232, 250 Connecting tube: O.D. ø10 x I.D. ø6.5

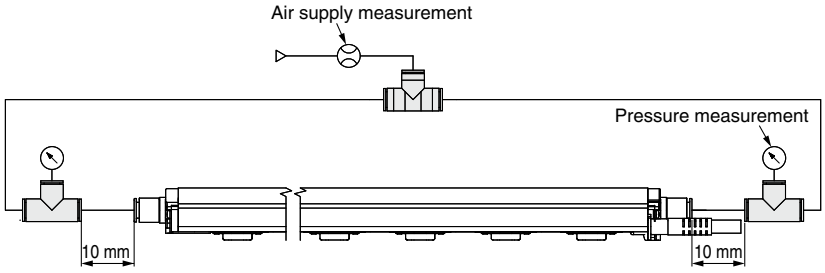

Separate Controller Bar Type Ionizer

IZT40/41(-L)/42(-L) Series

How to Order

Bar + High voltage power supply module + Controller

Transistor input/output

IZT ❶40 – ❸34 ❹D ❺1 ❻6H ❼R – ❾3 F U – ❹

IZT ❷41 – ❸34 ❹D ❺1 ❻6H ❼R ❽ – ❾3 F U – ❹

IO-Link

IZT ❷41 – ❸34 ❹D ❺1 ❻6H ❼R L – ❿T ⓫R ⓬F ⓭U – ⓮

❶ Model

Symbol	Model
40	Standard type

❷ Model

Symbol	Model
41	AC type
42	Dual AC type

❸ Bar length

Symbol	Length [mm]	Symbol	Length [mm]
16	160	82	820
22	220	112	1120
34	340	130	1300
40	400	160	1600
46	460	190	1900
58	580	232	2320
64	640	250	2500

❹ Emitter cartridge type/ Emitter material

Symbol	Type	Material
D	High speed static neutralization cartridge	Tungsten
E		Silicon
L	Energy saving static neutralization cartridge	Tungsten
M		Silicon
V	Energy saving high-efficiency cartridge	Tungsten
S		Silicon

❺ High voltage cable length

Symbol	High voltage cable length [m]
1	1
2	2
3	3

∗ The number of included high voltage cable holders differs depending on the high voltage cable length. (Refer to the table below.)

Number of included high voltage cable holders

⇨ Refer to page 77.

Symbol	IZT40		IZT41		IZT42	
	Straight	Elbow	Straight	Elbow	Straight	Elbow
1	1	1	1	1	2	2
2	2	1	2	1	4	2
3	3	1	3	1	6	2

❻ One-touch fitting

Symbol	Metric size
4H	ø4 Straight
6H	ø6 Straight
8H	ø8 Straight
AH	ø10 Straight
4L	ø4 Elbow
6L	ø6 Elbow
8L	ø8 Elbow
AL	ø10 Elbow

Symbol	Inch size
5H	ø3/16" Straight
7H	ø1/4" Straight
9H	ø5/16" Straight
BH	ø3/8" Straight
5L	ø3/16" Elbow
7L	ø1/4" Elbow
9L	ø5/16" Elbow
BL	ø3/8" Elbow

∗ Refer to the recommended piping port size on the next page for selecting a One-touch fitting.

❼ Plug position

Symbol	Plug position
Nil	Without plug
Q	High voltage cable side
R	Opposite side of the high voltage cable

❽ Input/Output

Symbol	Input/Output
Nil	NPN
P	PNP

∗ The input/output function cannot be used when an AC adapter is being used.

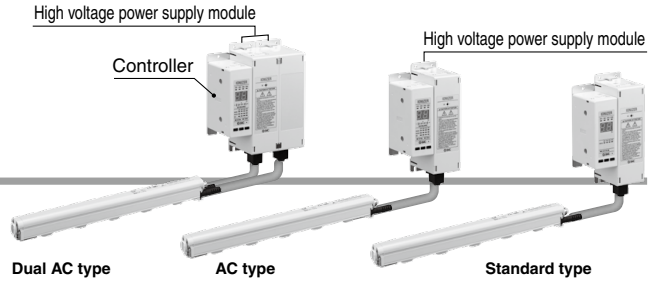

❾ Power supply cable length

Symbol	Length [m]
3	3
5	5
10	10
15	15
N	None

∗ To use an AC adapter, specify "N", and select the AC adapter sold separately.

❿ Power supply cable entry direction/length

Symbol	Entry direction	Length [m]
N	None	
J	Straight	3
K		5
M		10
S	Angled	3
T		5
Z		10

⓫ Communication cable entry direction/length

Symbol	Entry direction	Length [m]
N	None	
E	Straight	0.5
G		1
H		2
J		3
K		5
M		10
P	Angled	0.5
Q		1
R		2
S		3
T		5
Z		10

⓬ Bar bracket ⇨ Refer to page 77.

Symbol	Type
Nil	Without bracket
B	With bracket 1
F	With bracket 2

∗ The number of intermediate brackets differs depending on the bar length. (Refer to the table below.)

Number of brackets

Bar length [mm]	End bracket	Intermediate bracket
160 to 760	2	None
820 to 1600		1
1660 to 2380		2
2440 to 2500		3

⓭ DIN rail mounting bracket for controller and high voltage power supply module

⇨ Refer to page 77.

Symbol	For controller	For high voltage power supply module
Nil	None	None
U	Included	Included
W	Included	None
Y	None	Included

⓮ Made to order ⇨ Refer to page 73.

Symbol	Description
-X10	Non-standard bar length
-X14	Model with drop prevention cover

Recommended piping port size for the IZT4□
High speed static neutralization cartridge

One-touch fitting symbol	Applicable tubing O.D. [mm]	Bar length [mm]													
		160	220	340	400	460	580	640	820	1120	1300	1600	1900	2320	2500
4H/4L	ø4	○	○	●	●	●	—	—	—	—	—	—	—	—	—
6H/6L	ø6	○	○	○	○	○	○	●	●	●	—	—	—	—	—
8H/8L	ø8	○	○	○	○	○	○	○	○	●	●	●	●	—	—
AH/AL	ø10	○	○	○	○	○	○	○	○	○	○	○	●	●	●
5H/5L	ø3/16"	○	○	○	○	●	●	●	—	—	—	—	—	—	—
7H/7L	ø1/4"	○	○	○	○	○	○	○	●	●	●	—	—	—	—
9H/9L	ø5/16"	○	○	○	○	○	○	○	○	●	●	●	●	—	—
BH/BL	ø3/8"	○	○	○	○	○	○	○	○	○	○	○	●	●	●

○: With piping only on one side ●: With piping on both sides —: Unrecommended piping

Energy saving static neutralization cartridge

One-touch fitting symbol	Applicable tubing O.D. [mm]	Bar length [mm]													
		160	220	340	400	460	580	640	820	1120	1300	1600	1900	2320	2500
4H/4L	ø4	○	○	○	○	○	●	●	●	—	—	—	—	—	—
6H/6L	ø6	○	○	○	○	○	○	○	○	○	●	●	●	●	—
8H/8L	ø8	○	○	○	○	○	○	○	○	○	○	○	○	●	●
AH/AL	ø10	○	○	○	○	○	○	○	○	○	○	○	○	○	○
5H/5L	ø3/16"	○	○	○	○	○	○	○	●	●	●	—	—	—	—
7H/7L	ø1/4"	○	○	○	○	○	○	○	○	○	○	●	●	●	●
9H/9L	ø5/16"	○	○	○	○	○	○	○	○	○	○	○	○	●	●
BH/BL	ø3/8"	○	○	○	○	○	○	○	○	○	○	○	○	○	○

○: With piping only on one side ●: With piping on both sides —: Unrecommended piping

Energy saving high-efficiency cartridge

One-touch fitting symbol	Applicable tubing O.D. [mm]	Bar length [mm]													
		160	220	340	400	460	580	640	820	1120	1300	1600	1900	2320	2500
4H/4L	ø4	○	○	○	○	○	○	○	○	○	○	○	●	●	●
6H/6L	ø6	○	○	○	○	○	○	○	○	○	○	○	○	○	○
8H/8L	ø8	○	○	○	○	○	○	○	○	○	○	○	○	○	○
AH/AL	ø10	○	○	○	○	○	○	○	○	○	○	○	○	○	○
5H/5L	ø3/16"	○	○	○	○	○	○	○	○	○	○	○	○	○	○
7H/7L	ø1/4"	○	○	○	○	○	○	○	○	○	○	○	○	○	○
9H/9L	ø5/16"	○	○	○	○	○	○	○	○	○	○	○	○	○	○
BH/BL	ø3/8"	○	○	○	○	○	○	○	○	○	○	○	○	○	○

○: With piping only on one side ●: With piping on both sides

For Individual Parts

How to Order

Bar IZTB 40 – 16 D 1 6H R – F – X10

❶ ❷ ❸ ❹ ❺ ❻ ❼ ❽

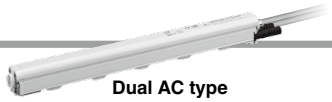
Dual AC type

Standard, AC type

❶ Model

Symbol	Model
40	Standard type (For IZT40), AC type (For IZT41)
42	Dual AC type (For IZT42)

❷ Bar length

Symbol	Length [mm]	Symbol	Length [mm]
16	160	82	820
22	220	112	1120
34	340	130	1300
40	400	160	1600
46	460	190	1900
58	580	232	2320
64	640	250	2500

❸ Emitter cartridge type

Symbol	Type	Material
D	High speed static neutralization cartridge	Tungsten
E		Silicon
L	Energy saving static neutralization cartridge	Tungsten
M		Silicon
V	Energy saving high-efficiency cartridge	Tungsten
S		Silicon

❹ High voltage cable length

Symbol	High voltage cable length [m]
1	1
2	2
3	3

∗ The number of included high voltage cable holders differs depending on the high voltage cable length. (Refer to the table below.)

Number of included high voltage cable holders

⇨ Refer to page 77.

Symbol	IZT40		IZT41		IZT42	
	Straight	Elbow	Straight	Elbow	Straight	Elbow
1	1	1	1	1	2	2
2	2	1	2	1	4	2
3	3	1	3	1	6	2

❺ One-touch fitting

Symbol	Metric size
4H	ø4 Straight
6H	ø6 Straight
8H	ø8 Straight
AH	ø10 Straight
4L	ø4 Elbow
6L	ø6 Elbow
8L	ø8 Elbow
AL	ø10 Elbow

Symbol	Inch size
5H	ø3/16" Straight
7H	ø1/4" Straight
9H	ø5/16" Straight
BH	ø3/8" Straight
5L	ø3/16" Elbow
7L	ø1/4" Elbow
9L	ø5/16" Elbow
BL	ø3/8" Elbow

∗ Refer to the table below for selecting a One-touch fitting.
∗ The position of the One-touch fitting and the plug cannot be changed after the delivery of the product.

❻ Plug position

Symbol	Position
Nil	Without plug
Q	High voltage cable side
R	Opposite side of the high voltage cable

❼ Bar bracket

⇨ Refer to page 77.

Symbol	Type
Nil	Without bracket
B	With bracket 1
F	With bracket 2

∗ The number of intermediate brackets differs depending on the bar length. (Refer to the table below.)

Number of brackets

Bar length	End bracket	Intermediate bracket
160 to 760	2	None
820 to 1600		1
1660 to 2380		2
2440 to 2500		3

❽ Made to order

⇨ Refer to page 73.

Symbol	Description
-X10	Non-standard bar length
-X14	Model with drop prevention cover

Recommended piping port size for the IZT4□

High speed static neutralization cartridge

One-touch fitting symbol	Applicable tubing O.D.	Bar length [mm]													
		160	220	340	400	460	580	640	820	1120	1300	1600	1900	2320	2500
4H/4L	ø4 mm	○	○	●	●	●	—	—	—	—	—	—	—	—	—
6H/6L	ø6 mm	○	○	○	○	○	○	●	●	●	—	—	—	—	—
8H/8L	ø8 mm	○	○	○	○	○	○	○	○	●	●	●	●	—	—
AH/AL	ø10 mm	○	○	○	○	○	○	○	○	○	○	○	●	●	●
5H/5L	ø3/16"	○	○	○	○	●	●	●	—	—	—	—	—	—	—
7H/7L	ø1/4"	○	○	○	○	○	○	○	●	●	●	—	—	—	—
9H/9L	ø5/16"	○	○	○	○	○	○	○	○	●	●	●	●	—	—
BH/BL	ø3/8"	○	○	○	○	○	○	○	○	○	○	○	●	●	●

○: With piping only on one side ●: With piping on both sides —: Unrecommended piping

Energy saving static neutralization cartridge

One-touch fitting symbol	Applicable tubing O.D.	Bar length [mm]													
		160	220	340	400	460	580	640	820	1120	1300	1600	1900	2320	2500
4H/4L	ø4 mm	○	○	○	○	○	●	●	●	—	—	—	—	—	—
6H/6L	ø6 mm	○	○	○	○	○	○	○	○	○	●	●	●	●	—
8H/8L	ø8 mm	○	○	○	○	○	○	○	○	○	○	○	○	●	●
AH/AL	ø10 mm	○	○	○	○	○	○	○	○	○	○	○	○	○	○
5H/5L	ø3/16"	○	○	○	○	○	○	○	●	●	●	—	—	—	—
7H/7L	ø1/4"	○	○	○	○	○	○	○	○	○	○	●	●	●	●
9H/9L	ø5/16"	○	○	○	○	○	○	○	○	○	○	○	○	●	●
BH/BL	ø3/8"	○	○	○	○	○	○	○	○	○	○	○	○	○	○

○: With piping only on one side ●: With piping on both sides —: Unrecommended piping

Energy saving high-efficiency cartridge

One-touch fitting symbol	Applicable tubing O.D.	Bar length [mm]													
		160	220	340	400	460	580	640	820	1120	1300	1600	1900	2320	2500
4H/4L	ø4 mm	○	○	○	○	○	○	○	○	○	○	○	●	●	●
6H/6L	ø6 mm	○	○	○	○	○	○	○	○	○	○	○	○	○	○
8H/8L	ø8 mm	○	○	○	○	○	○	○	○	○	○	○	○	○	○
AH/AL	ø10 mm	○	○	○	○	○	○	○	○	○	○	○	○	○	○
5H/5L	ø3/16"	○	○	○	○	○	○	○	○	○	○	○	○	○	○
7H/7L	ø1/4"	○	○	○	○	○	○	○	○	○	○	○	○	○	○
9H/9L	ø5/16"	○	○	○	○	○	○	○	○	○	○	○	○	○	○
BH/BL	ø3/8"	○	○	○	○	○	○	○	○	○	○	○	○	○	○

○: With piping only on one side ●: With piping on both sides

Individual Parts Combinations

	Bar/IZTB		High voltage power supply module/IZTP			Controller/IZTC	
	40	42	40	41	42	40	41
IZT40	●		●			●	
IZT41	●			●			●
IZT42		●			●		●

⚠ Caution

The transistor input/output specification and the IO-Link specification cannot be installed in combination.

Controller

Transistor input/output

IZTC 40 – 3 – W

IZTC 41 – ☐ 3 – W

IO-Link

IZTC 41 – L J G – W

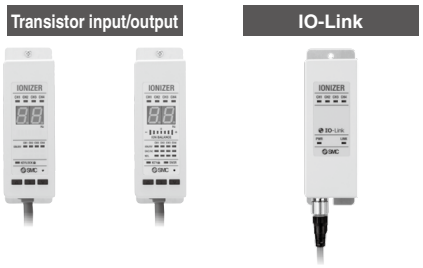

Standard type

AC, Dual AC type

❶ Model

Symbol	Model
40	Standard type

❷ Model

Symbol	Model
41	AC type, Dual AC type

❸ Input/Output

Symbol	Input/Output
Nil	NPN
P	PNP

❹ Power supply cable length

Symbol	Length [m]
3	3
5	5
10	10
15	15
N	None

❺ Power supply cable entry direction/length

Symbol	Entry direction	Length [m]
N	None	
J	Straight	3
K		5
M		10
S	Angled	3
T		5
Z		10

❻ Communication cable entry direction/length

Symbol	Entry direction	Length [m]
N	None	
E	Straight	0.5
G		1
H		2
J		3
K		5
M		10
P	Angled	0.5
Q		1
R		2
S		3
T		5
Z		10

❼ DIN rail mounting bracket

⇨ Refer to page 77.

Symbol	Type
Nil	None
W	Included

High voltage power supply module

Transistor input/output

IZTP 41 – Y

IO-Link

IZTP 41 – L – Y

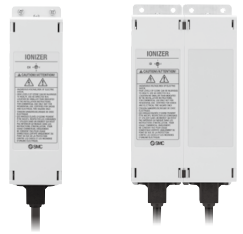

Standard, AC type

Dual AC type

❶ Model

Symbol	Model
40	Standard type (For Bar)
41	AC type (For Bar)
42	Dual AC type (For Bar)
43	AC type (For Nozzle)

❷ Model

Symbol	Model
41	AC type (For Bar)
42	Dual AC type (For Bar)
43	AC type (For Nozzle)

❸ DIN rail mounting bracket

⇨ Refer to page 77.

Symbol	Type
Nil	None
Y	Included

Made to Order

Symbol	Description	Specifications
-X10	Non-standard bar length	Manufacturable bar length (Symbol): 10 + 6 x n (n: Integer from 1 to 39) (For n = 1, 2, 4, 5, 6, 8, 9, 12, 17, 20, 25, 30, and 37, use a standard model.)

Bar + High voltage power supply module + Controller

	IZT	40	–	52	D	1	6H	R		–			F			–	X10
Transistor input/output	IZT	42	–	52	D	1	6H	R		–			F			–	X10
IO-Link	IZT	42	–	52	D	1	6H	R	L	–			F			–	X10
Bar	IZTB	40	–	52	D	1	6H	R		–			F			–	X10

❶ ❷ ❸

Standard model number ⇨ Refer to pages 69, 70, and 71.

❶ Type

41
42

❷ Type

40
42

❸ Bar length

Symbol	Bar length [mm]	Symbol	Bar length [mm]	Symbol	Bar length [mm]	Symbol	Bar length [mm]
28	280	106	1060	166	1660	214	2140
52	520	118	1180	172	1720	220	2200
70	700	124	1240	178	1780	226	2260
76	760	136	1360	184	1840	238	2380
88	880	142	1420	196	1960	244	2440
94	940	148	1480	202	2020		
100	1000	154	1540	208	2080		

Symbol	Description	Specifications
-X14	Model with emitter cartridge drop prevention cover	The main unit is shipped fitted with a drop prevention cover available as an optional accessory.

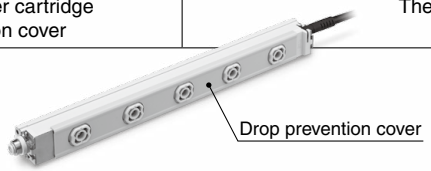

Bar + High voltage power supply module + Controller

	IZT	40	–	34	D	1	6H	R		–			F			–	X14
Transistor input/output	IZT	42	–	34	D	1	6H	R		–			F			–	X14
IO-Link	IZT	42	–	34	D	1	6H	R	L	–			F			–	X14
Bar	IZTB	40	–	34	D	1	6H	R		–			F			–	X14

❶ ❷ ❸

Standard model number ⇨ Refer to pages 69, 70, and 71.

❶ Type

41
42

❷ Type

40
42

❸ Bar length

	Symbol	16	22	34	40	46	58	64	82	112	130	160	190	232	250
Standard	Bar length [mm]	160	220	340	400	460	580	640	820	1120	1300	1600	1900	2320	2500
Non-standard	The bar of non-standard length is available. Refer to “How to Order” above.														

Specifications

Ionizer Specifications

Ionizer model		IZT40	IZT41(-L)	IZT42(-L)
Ion generation method		Corona discharge type		
Method of applying voltage		AC, DC*1		Dual AC
Applied voltage		±7000 V		±6000 V
Offset voltage*2		Within ±30 V		
Air purge	**Fluid**	Air (Clean, dry air)		
	Operating pressure	0.5 MPa or less		
	Proof pressure	0.7 MPa		
	Connecting tube size (One side can be plugged.)	Metric size: ø4, ø6, ø8, ø10 Inch size: ø3/16", ø1/4", ø5/16", ø3/8"		
Current consumption		0.7 A or less (+0.6 A or less per ionizer when connected)	0.8 A or less (+0.7 A or less per ionizer when connected)	1.4 A or less (+1.3 A or less per ionizer when connected)
Power supply voltage		24 VDC ±10%		
Input signal*3	**NPN specification**	—	Connected to DC (–) Voltage range: 5 VDC or less Current consumption: 5 mA or less	
	PNP specification		Connected to DC (+) Voltage range: 19 VDC to power supply voltage Current consumption: 5 mA or less	
Output signal*3	**NPN specification**	—	Max. load current: 100 mA Residual voltage: 1 V or less (Load current at 100 mA) Max. applied voltage: 26.4 VDC	
	PNP specification		Max. load current: 100 mA Residual voltage: 1 V or less (Load current at 100 mA)	
IO-Link device*4		—	Voltage range: 18 to 30 VDC Current consumption: 100 mA or less * For details, refer to the "IO-Link Communication Specifications" table below.	
Function		High voltage abnormality detection (Ion generation stops when an abnormality is detected.)	Auto balance, Maintenance detection, High voltage abnormality detection (Ion generation stops when an abnormality is detected.), and Ion generation stop input	
Effective static neutralization distance		50 to 2000 mm		
Ambient and fluid temperatures	**Controller, High voltage power supply module**	0 to 40°C		
	Bar	0 to 50°C		
Ambient humidity		35 to 80%RH (No condensation)		
Material	**Controller**	Cover: ABS, Aluminum, Switch: Silicone rubber*3		
	High voltage power supply module	ABS, Aluminum		
	Bar	Cover: ABS, Emitter cartridge: PBT, Emitter: Tungsten or Single crystal silicon, High voltage cable: Silicone rubber, PVC		
Standards/Directive		CE (EMC directive, RoHS directive), UKCA		

*1 Apply cathode or anode to DC.
*2 When air purge is performed between a charged object and an ionizer at a distance of 300 mm
*3 For transistor input/output specification products
*4 For IO-Link compatible products

IO-Link Communication Specifications

IO-Link type	Device
IO-Link version	V1.1
Configuration file format	IODD file*1
Communication speed	COM2 (38.4 kbps)
Min. cycle time	8.0 ms
Process data length	Input data: 13 bytes, Output data: 9 bytes
On request data communication	Yes
Data storage function	Yes
Event function	Yes
Vendor ID	131 (0 x 0083)
Device ID	581 (0 x 000245)

*1 The configuration file can be downloaded from the SMC website: https://www.smcworld.com

Specifications

Weight

[g]

	Controller	High voltage power supply module
IZT40	210 (230)	680 (690)
IZT41(-L)	210 (230)	680 (690)
IZT42(-L)	210 (230)	1350 (1360)

∗ The values in ( ) are for IO-Link compatible products.

Number of Emitter Cartridges/Bar Weight

[g]

Bar length symbol		16	22	34	40	46	58	64	82	112	130	160	190	232	250
Number of emitter cartridges (pcs.)		2	3	5	6	7	9	10	13	18	21	26	31	38	41
IZT40 IZT41 (Common for bars)	**High voltage cable (1 m)**	360	420	530	590	650	760	820	990	1270	1440	1720	2010	2410	2580
	High voltage cable (2 m)	490	550	660	720	780	890	950	1120	1400	1570	1850	2140	2540	2710
	High voltage cable (3 m)	610	670	780	840	900	1010	1070	1240	1520	1690	1970	2260	2660	2830
IZT42	**High voltage cable (1 m)**	520	580	690	750	810	920	980	1150	1430	1600	1880	2170	2570	2740
	High voltage cable (2 m)	770	830	940	1000	1060	1170	1230	1400	1680	1850	2130	2420	2820	2990
	High voltage cable (3 m)	1010	1070	1180	1240	1300	1410	1470	1640	1920	2090	2370	2660	3060	3230

AC Adapter (Sold Separately) ⇨ Refer to page 78.

Model	**IZT40-CG1, IZT40-CG2**
Input voltage	100 to 240 VAC, 50/60 Hz
Output current	1.9 A
Ambient temperature	0 to 40°C
Ambient humidity	35 to 65%RH (No condensation)
Weight	375 g
Safety standards	IEC 62368-1

Construction

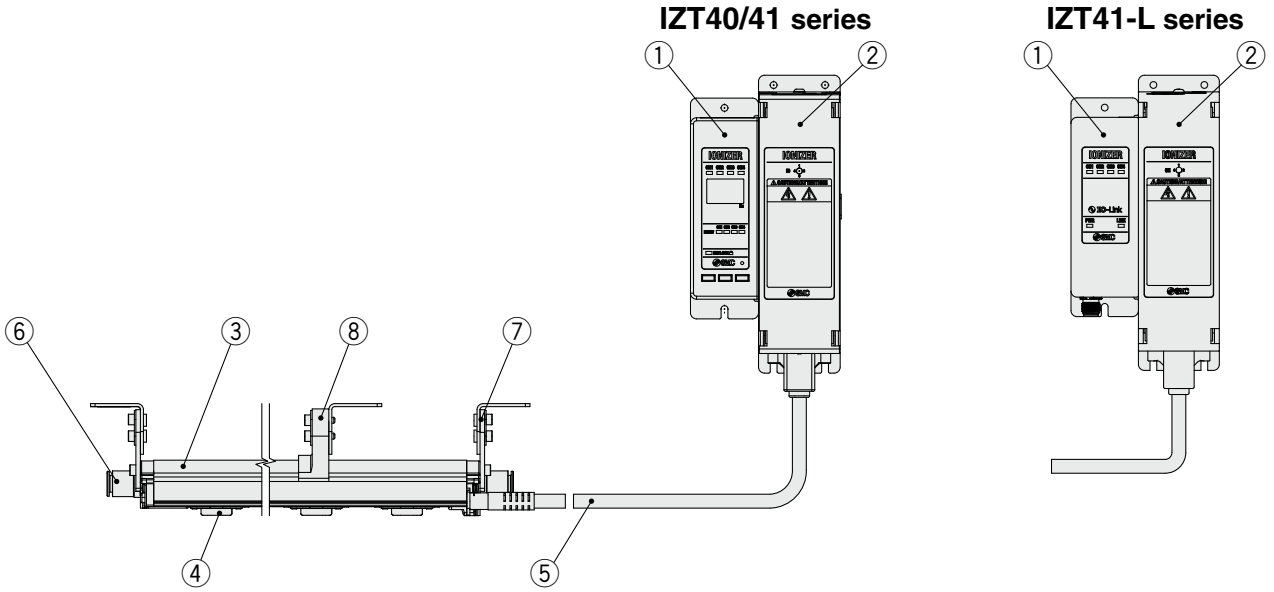

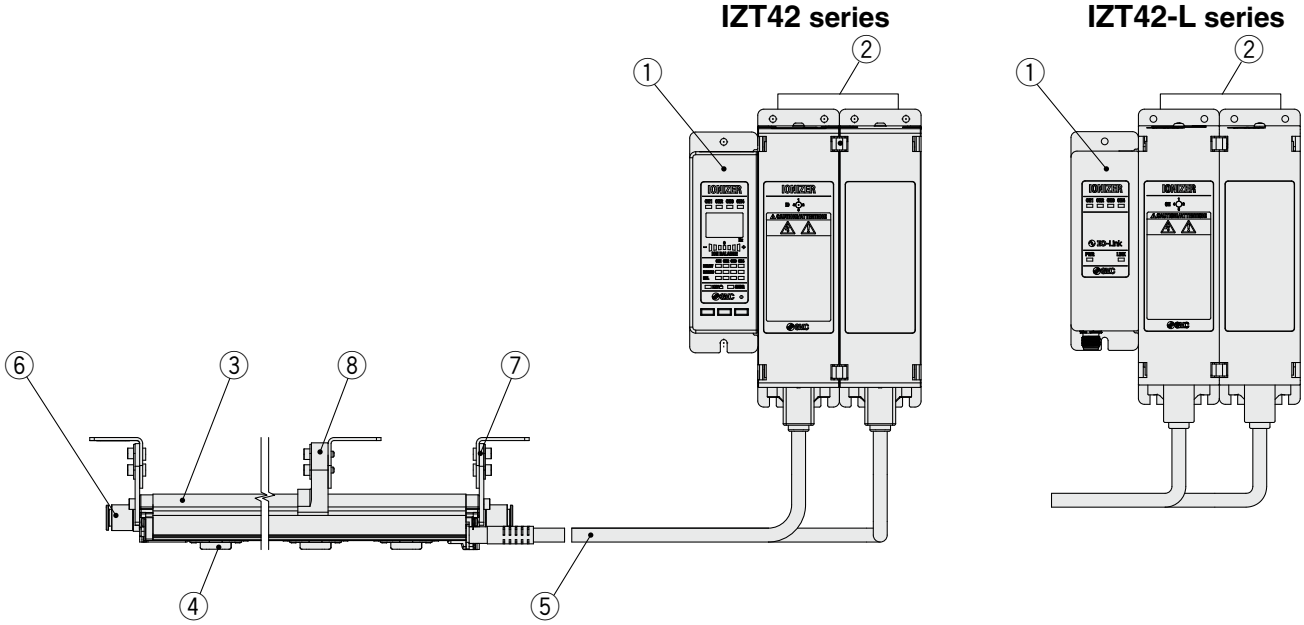

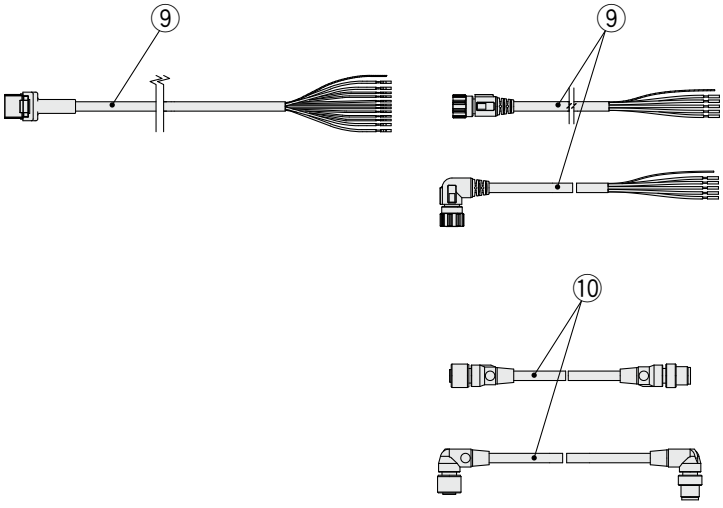

No.	Description
1	**Controller**
2	**High voltage power supply module**
3	**Bar**
4	**Emitter cartridge**
5	**High voltage cable**
6	**One-touch fitting**
7	**End bracket**
8	**Intermediate bracket**
9	**Power supply cable**
10	**Communication cable**

Accessories (for Individual Parts)

Emitter cartridge (For IZT40, 41(-L), 42(-L))

IZT40 − N D

High speed static neutralization

Energy saving static neutralization

Emitter cartridge type/Emitter material

Symbol	Type	Material
D	High speed static neutralization cartridge	Tungsten
E		Silicon
L	Energy saving static neutralization cartridge	Tungsten
M		Silicon

Cartridge color	Emitter material
White	Tungsten
Gray	Silicon

IZS40 − N V

Energy saving high-efficiency

Emitter cartridge type/Emitter material

Symbol	Type	Material
V	Energy saving high-efficiency cartridge	Tungsten
S		Silicon

Cartridge color	Emitter material
White	Tungsten
Gray	Silicon

Bar bracket (For IZT40, 41(-L), 42(-L))

IZT40 − B E1

Bar bracket

Symbol	Type
E1	End bracket 1
E2	End bracket 2
M1	Intermediate bracket 1
M2	Intermediate bracket 2

∗ Refer to the table below for selecting a bracket.

Bracket combinations

	Intermediate bracket 1	Intermediate bracket 2
End bracket 1	○ (Adjustment angle ±90°)	×
End bracket 2	×	○ (Adjustment angle ±15°)

○: Available ×: Not available

∗ The number of intermediate brackets required, as listed below, depends on the bar length. 2 end brackets are always required regardless of the bar length.

Number of brackets

Bar length	End bracket	Intermediate bracket
160 to 760	2	None
820 to 1600		1
1660 to 2380		2
2440 to 2500		3

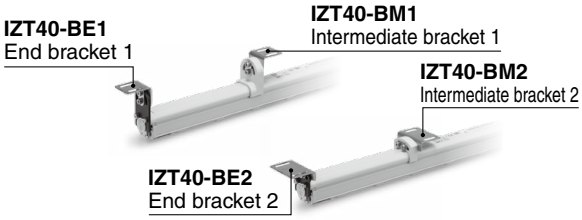

Power supply cable (IZT40, 41, 42)

IZT40 − CP 3

Cable specifications
⇨ Refer to page 89.

Power supply cable length

Symbol	Length [m]
3	3
5	5
10	10
15	15

IO-Link power supply cable (IZT41-L, 42-L)

IZT41 − CP J

Power supply cable entry direction/length

Symbol	Entry direction	Length [m]
J	Straight	3
K		5
M		10
S	Angled	3
T		5
Z		10

IO-Link communication cable (IZT41-L, 42-L)

IZT41 − CE G

Communication cable entry direction/length

Symbol	Entry direction	Length [m]
E	Straight	0.5
G		1
H		2
J		3
K		5
M		10
P	Angled	0.5
Q		1
R		2
S		3
T		5
Z		10

DIN rail mounting bracket for controller and high voltage power supply module

IZT40 − B 1

DIN rail mounting bracket

Symbol	Type
1	For Controller
2	For High voltage power supply module
3	For High voltage power supply module for IZT42

For Controller

IZT40-B1

For High voltage power supply module

IZT40-B2

For IZTP42

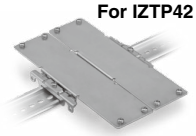

IZT40-B3

High voltage cable holder

IZT40 − E 1

High voltage cable holder

Symbol	Type
1	Straight
2	Elbow

Straight

IZT40-E1

Elbow

IZT40-E2

Accessories Sold Separately

Drop prevention cover (For IZT40, 41(-L), 42(-L))

IZS40 − E 2

Number of fixed emitter cartridges

Symbol	Type
2	2 pcs.
3	3 pcs.
4	4 pcs.
5	5 pcs.

Standard bar length

Bar length symbol	Number of required drop prevention covers			
	IZS40-E2	IZS40-E3	IZS40-E4	IZS40-E5
16	1	—	—	—
22	—	1	—	—
34	—	—	—	1
40	—	2	—	—
46	—	1	1	—
58	—	—	1	1
64	—	—	—	2
82	—	1	—	2
112	—	1	—	3
130	—	2	—	3
160	—	2	—	4
190	—	2	—	5
232	—	1	—	7
250	—	2	—	7

∗ Please contact SMC for the non-standard bar length.

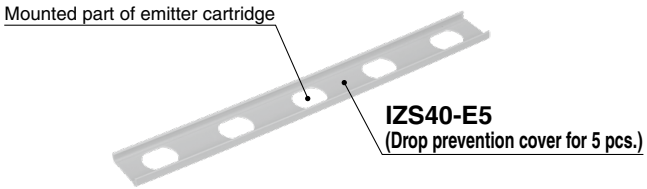

Specify "-X14" at the end of the standard model number when ordering a drop prevention cover attached to the body.
⇨ Refer to page 73.

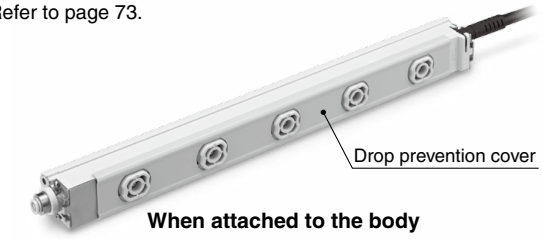

When attached to the body

AC adapter (IZT40, 41, 42)

IZT40 − CG 1

AC cord selection

Symbol	Type
1	With AC cord
2	Without AC cord

∗ An AC cord is only for use in Japan. (Rated voltage 125 V, Plug JIS C 8303, Inlet IEC 60320-C6) The external input/output function cannot be used when an AC adapter is being used.
∗ Cannot be used for the IO-Link specification

AC adapter

Separate cable (IZT40, 41, 42)

IZT40 − CF 1

Cable length

Symbol	Length [m]
1	1
2	2
3	3

Cleaning kit (For IZT40, 41, 42)

IZS30 − M2

Replacement felt pad: IZS30-A0201
Replacement rubber grindstone: IZS30-A0202

Wiring: IZT40, 41(-L), 42(-L)

IZT40

Cable color	Signal name	Signal direction	Description
Brown	DC (+)	IN	Connects to the power supply to operate the product
Blue	DC (–)	IN	
Green	F.G.	—	Frame ground of the product. Make sure to ground with a resistance value of 100 Ω or less to use it as a reference electric potential for the offset voltage. If not grounded, sufficient performance cannot be obtained and equipment failure may result.
Pink	Ion generation stop signal CH1	—	—
Gray	Ion generation stop signal CH2	—	—
Yellow	Ion generation stop signal CH3	—	—
Purple	Ion generation stop signal CH4	—	—
White	Maintenance detection signal	—	—
Black	Error signal	—	—
Orange	Unused	—	—

IZT41, 42

Cable color	Signal name	Signal direction	Description
Brown	DC (+)	IN	Connects to the power supply to operate the product
Blue	DC (–)	IN	
Green	F.G.	—	Frame ground of the product. Make sure to ground with a resistance value of 100 Ω or less to use it as a reference electric potential for the offset voltage. If not grounded, sufficient performance cannot be obtained and equipment failure may result.
Pink	Ion generation stop signal CH1	IN	Signal input to turn ion generation of each bar (CH1 to 4) ON/OFF NPN specification: Stops generating ions by connecting to 0 V (Starts generating ions when disconnected) PNP specification: Stops generating ions by connecting to +24 VDC (Starts generating ions when disconnected)
Gray	Ion generation stop signal CH2	IN	
Yellow	Ion generation stop signal CH3	IN	
Purple	Ion generation stop signal CH4	IN	
White	Maintenance detection signal	OUT (A contact)	Turns ON when emitters need cleaning
Black	Error signal	OUT (B contact)	Turns OFF in case of power supply failure, high voltage failure, CPU failure, communication failure, cooling fan motor failure, output signal overcurrent, or inconsistent or CH setting duplication or non-connection of high voltage power supply module (ON when there is no problem)
Orange	—	—	—

IZT41-L, 42-L: IO-Link Power Supply Cable

No.	Cable color	Signal name	Description
1	Brown	DC (+)	Connects to the power supply to operate the ionizer
2			
3	Blue	DC (–)	
4			
5	Green	F.G.	Make sure to ground with a resistance value of 100 Ω or less to use it as a reference electric potential for ionizer.

∗ Refer to the power supply cable dimensions on page 89 for the cable specifications.

IZT41-L, 42-L: IO-Link Communication Cable

No.	Signal name	Description
1	L+	Power supply for IO-Link
2	—	—
3	L–	Power supply for IO-Link
4	C/Q	—
5	—	—

Frequencies

Series	IZT40	IZT41(-L)	IZT42(-L)
Controller	IZTC40	IZTC41(-L)	
Frequency [Hz]	1	1	0.1
	3	3	0.5
	5	5	1
	8	8	3
	10	10	5
	15	15	8
	20	20	10
	30	30	15
	DC+	DC+	20
	DC–	DC–	30

Wiring Circuit: IZT40

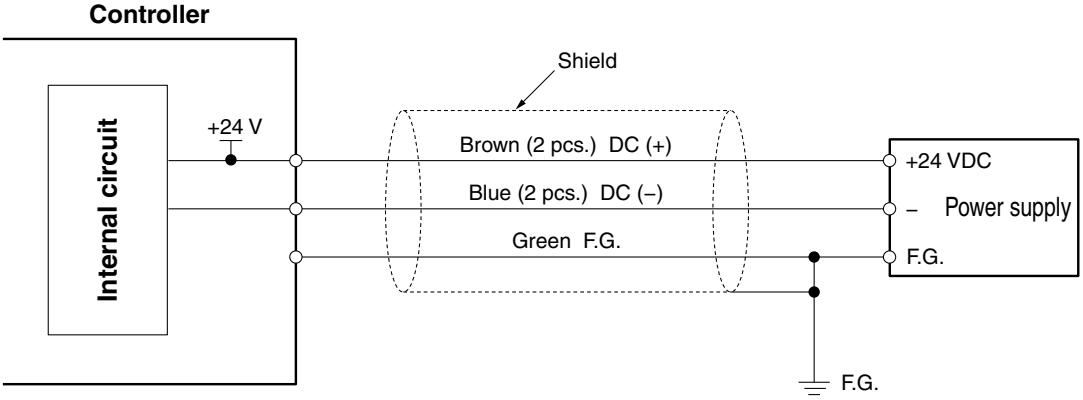

Wiring Circuit: IZT41, 42

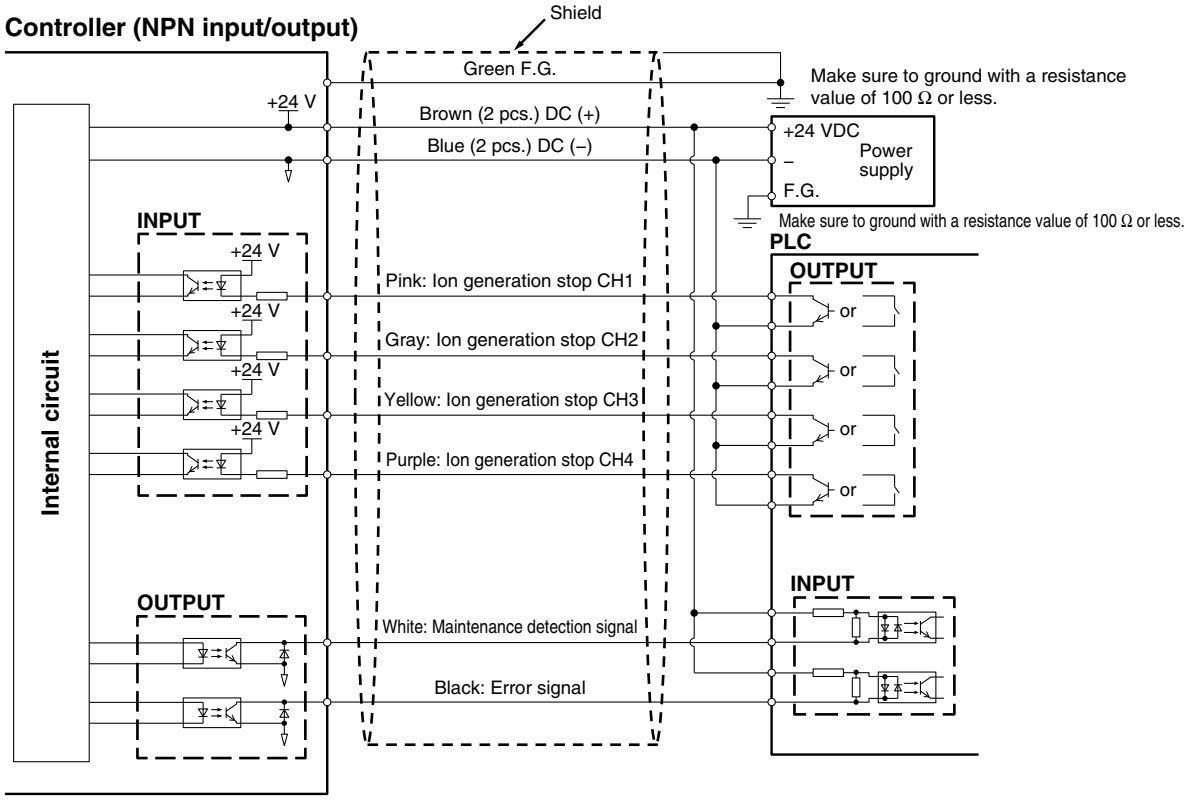

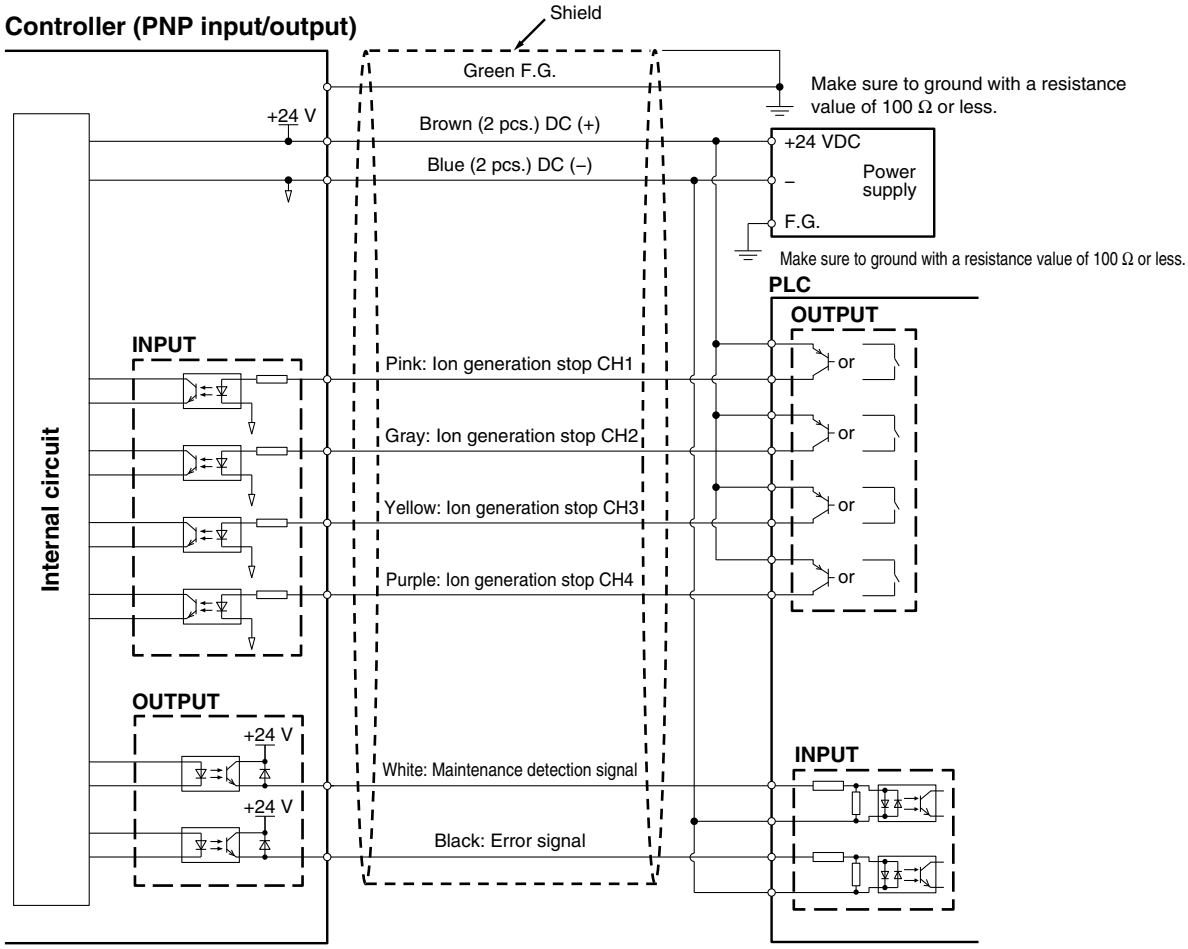

Wiring Circuit: IZT41-L, 42-L

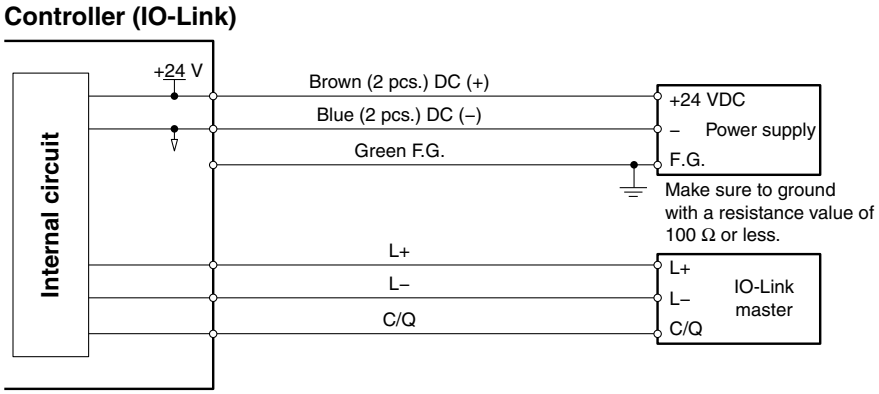

Dimensions

Ionizer IZT40, 41(-L)

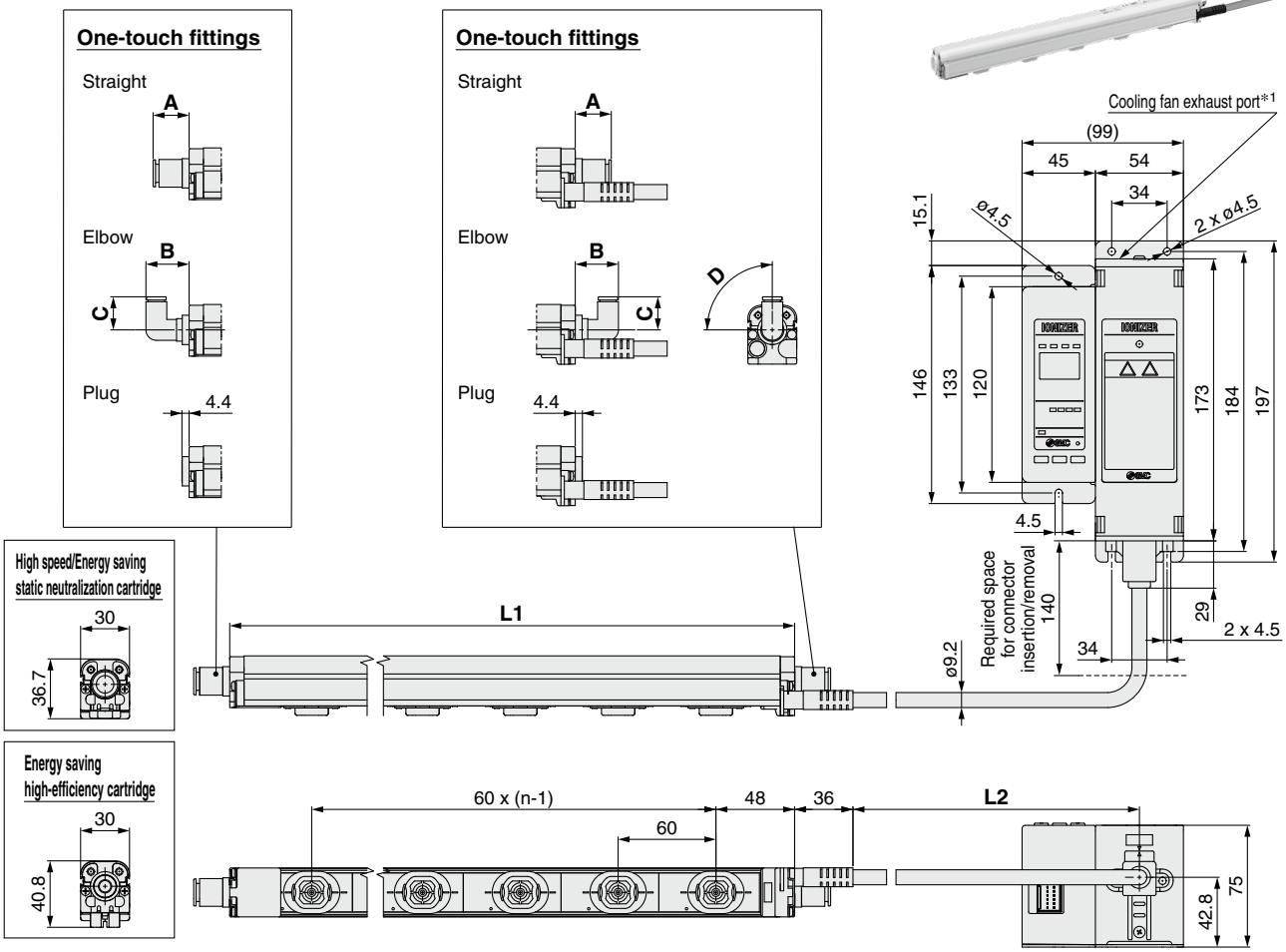

*1 Refer to Mounting (12) in the Specific Product Precautions (page 113).

No. of Emitter Cartridges n, Bar Length L1

Part no.	n [pcs.]	L1 [mm]
IZT□-16	2	160
IZT□-22	3	220
IZT□-34	5	340
IZT□-40	6	400
IZT□-46	7	460
IZT□-58	9	580
IZT□-64	10	640
IZT□-82	13	820
IZT□-112	18	1120
IZT□-130	21	1300
IZT□-160	26	1600
IZT□-190	31	1900
IZT□-232	38	2320
IZT□-250	41	2500

High Voltage Cable Length L2

Symbol	L2 [mm]
1	1000
2	2000
3	3000

One-touch Fittings

Straight [mm]

	Applicable tubing O.D.	A
Metric	ø4	13
	ø6	13
	ø8	15
	ø10	22
Inch	ø3/16"	15
	ø1/4"	14
	ø5/16"	15
	ø3/8"	23

Elbow [mm]

	Applicable tubing O.D.	B	C	D
Metric	ø4	25	19	90°
	ø6	27	21	75°
	ø8	29	24	73°
	ø10	37	27	71°
Inch	ø3/16"	26	20	90°
	ø1/4"	27	21	75°
	ø5/16"	29	24	73°
	ø3/8"	36	27	71°

Dimensions

End bracket IZT40-BE1
Intermediate bracket IZT40-BM1

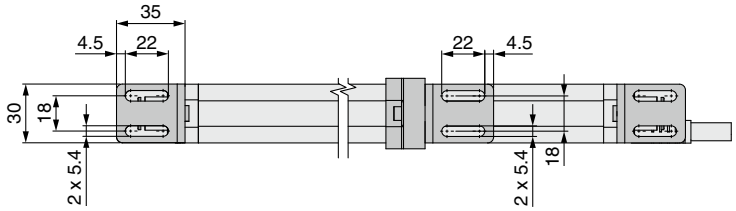

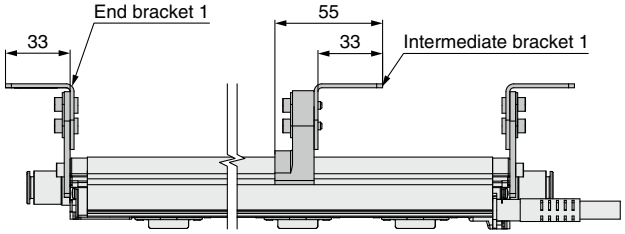

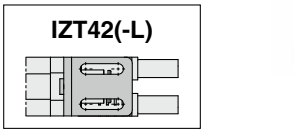

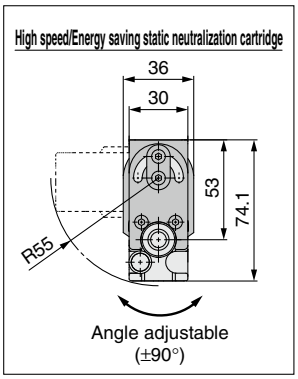

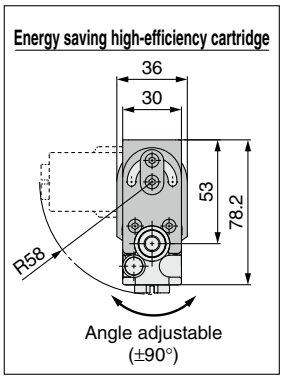

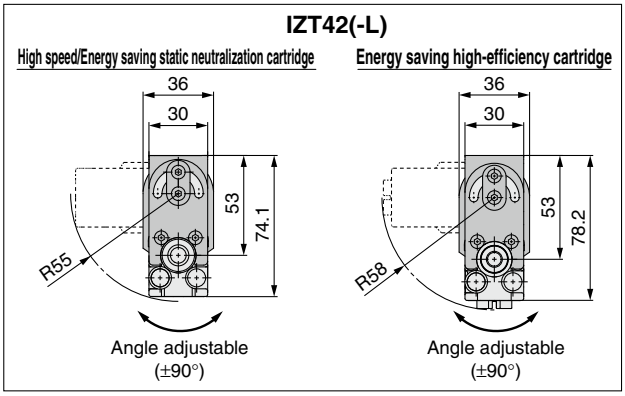

End bracket IZT40-BE2
Intermediate bracket IZT40-BM2

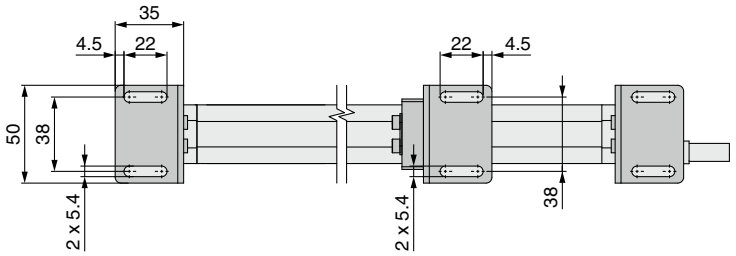

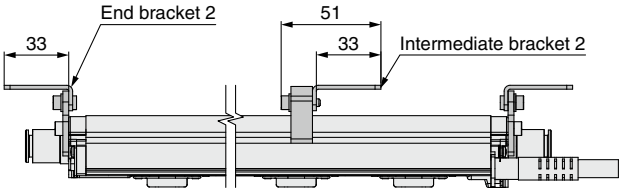

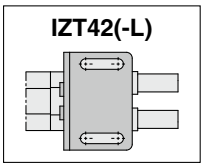

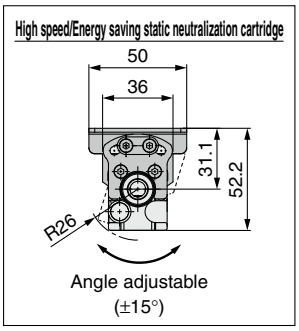

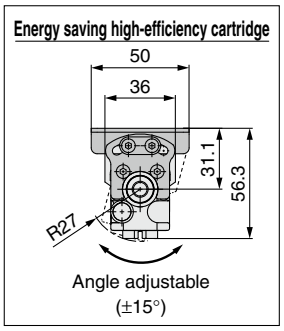

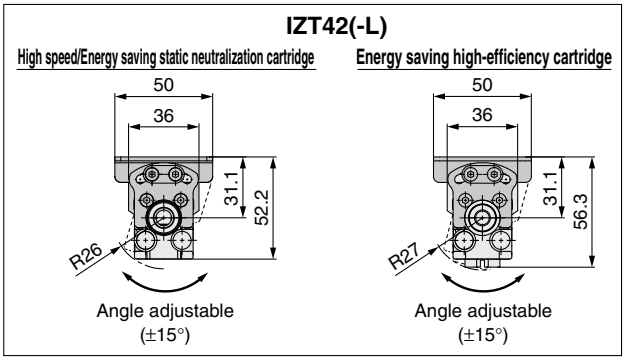

Dimensions

Ionizer IZT42(-L)

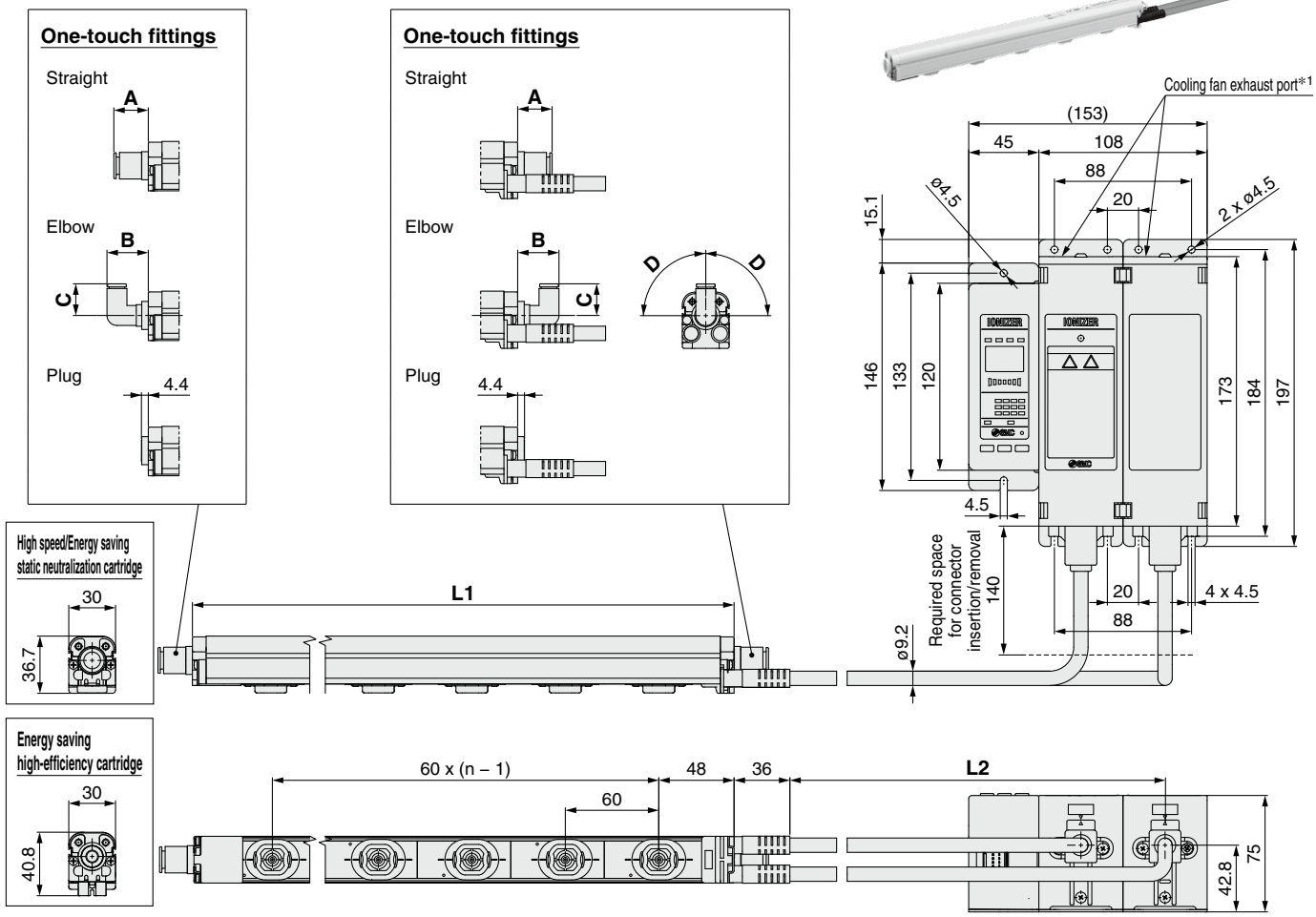

*1 Refer to Mounting (12) in the Specific Product Precautions (page 113).

No. of Emitter Cartridges n, Bar Length L1

Part no.	n [pcs.]	L1 [mm]
IZT□-16	2	160
IZT□-22	3	220
IZT□-34	5	340
IZT□-40	6	400
IZT□-46	7	460
IZT□-58	9	580
IZT□-64	10	640
IZT□-82	13	820
IZT□-112	18	1120
IZT□-130	21	1300
IZT□-160	26	1600
IZT□-190	31	1900
IZT□-232	38	2320
IZT□-250	41	2500

High Voltage Cable Length L2

Symbol	L2 [mm]
1	1000
2	2000
3	3000

One-touch Fittings

Straight [mm]

	Applicable tubing O.D.	A
Metric	ø4	13
	ø6	13
	ø8	15
	ø10	22
Inch	ø3/16"	15
	ø1/4"	14
	ø5/16"	15
	ø3/8"	23

Elbow [mm]

	Applicable tubing O.D.	B	C	D
Metric	ø4	25	19	90°
	ø6	27	21	75°
	ø8	29	24	73°
	ø10	37	27	71°
Inch	ø3/16"	26	20	90°
	ø1/4"	27	21	75°
	ø5/16"	29	24	73°
	ø3/8"	36	27	71°

Dimensions

Controller IZT40, 41, 42

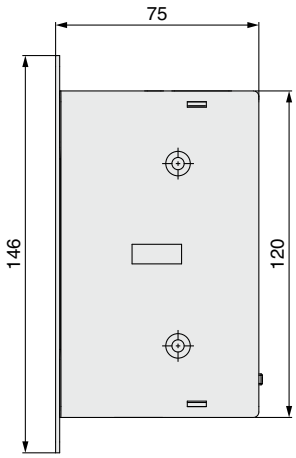

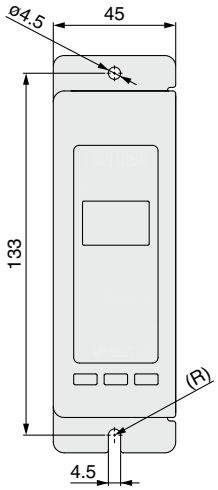

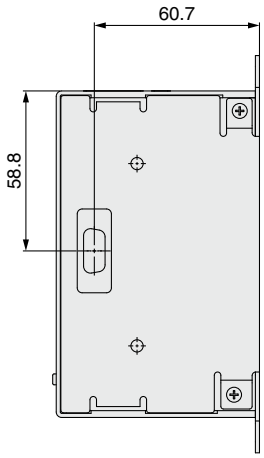

IZT41, 42 IZT40

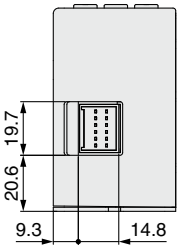

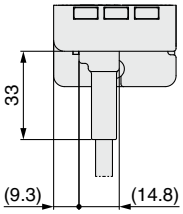

When a power supply cable is inserted

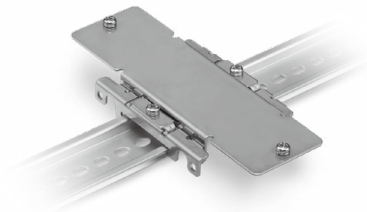

When a DIN rail mounting bracket (IZT40-B1) is used

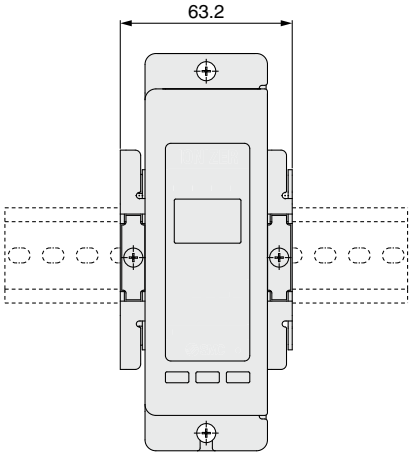

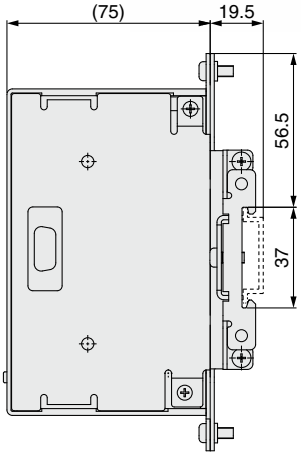

Dimensions

Controller IZT41-L, 42-L

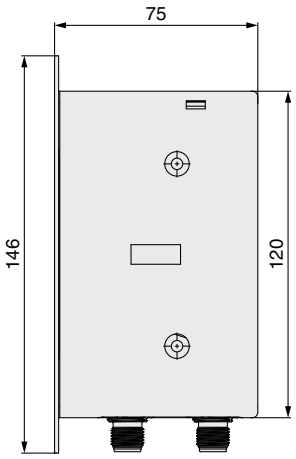

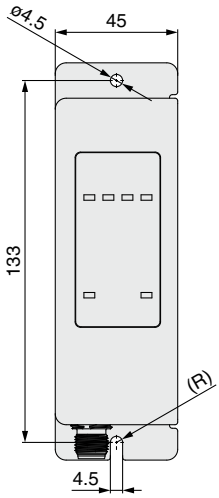

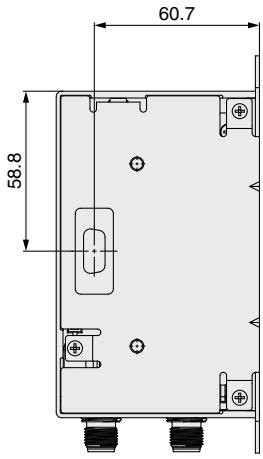

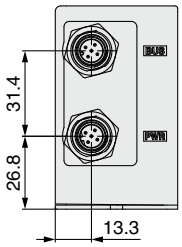

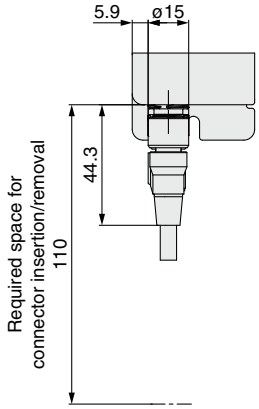

When a straight cable is inserted

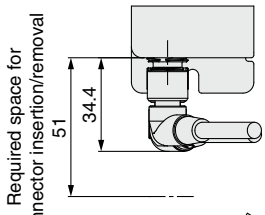

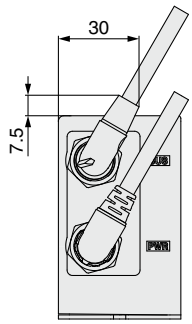

When angled cables are inserted

When a DIN rail mounting bracket (IZT40-B1) is used

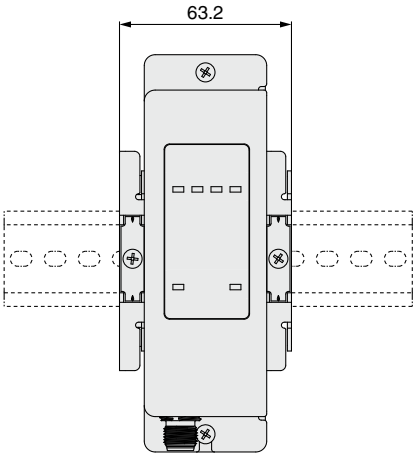

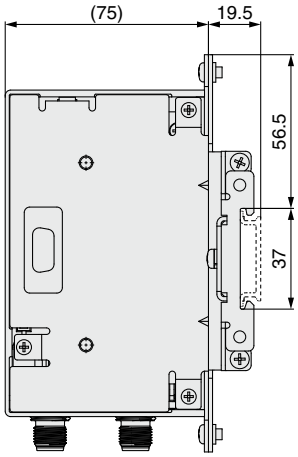

Dimensions

High voltage power supply module for IZT40, 41(-L)

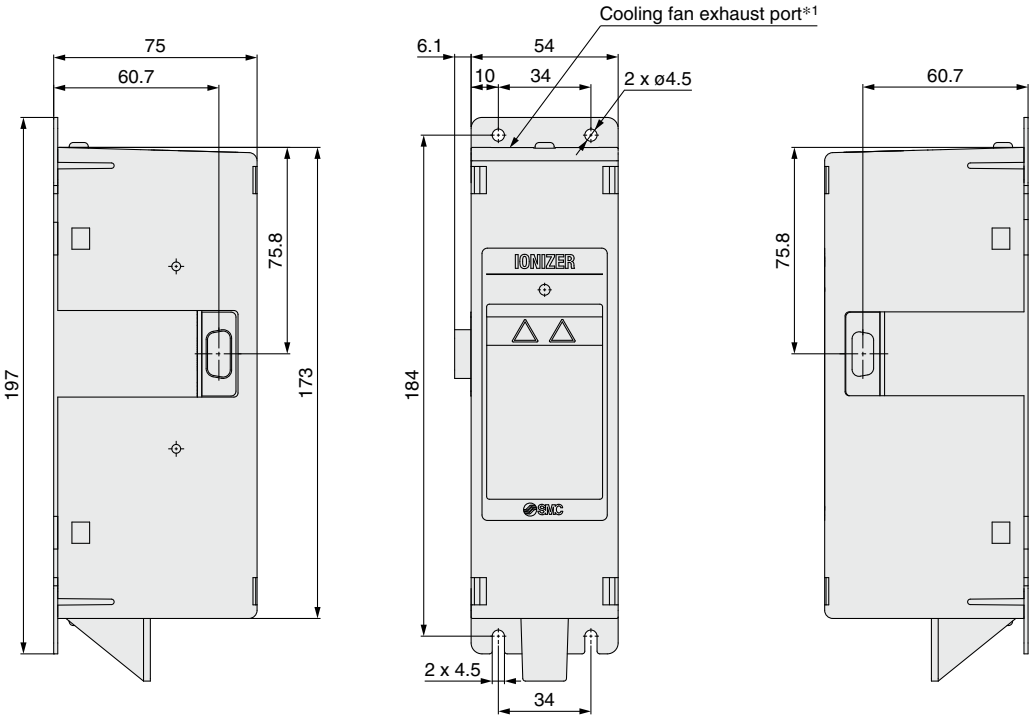

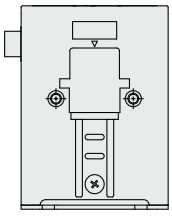

*1 Refer to Mounting (12) in the Specific Product Precautions (page 113).

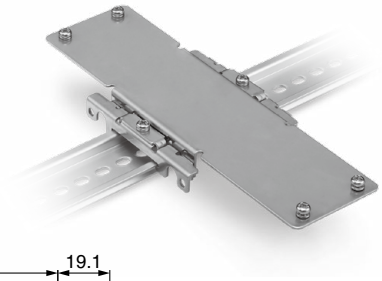

When a DIN rail mounting bracket (IZT40-B2) is used

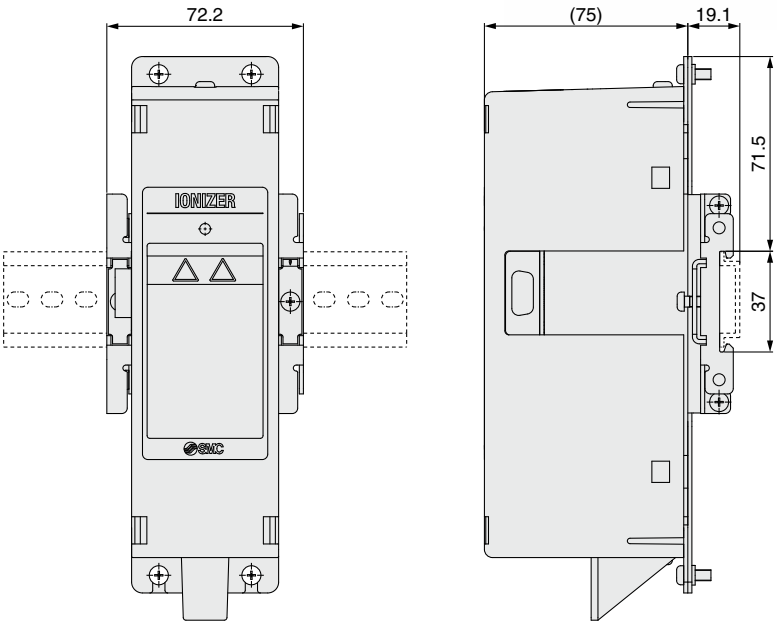

Dimensions

High voltage power supply module for IZT42(-L)

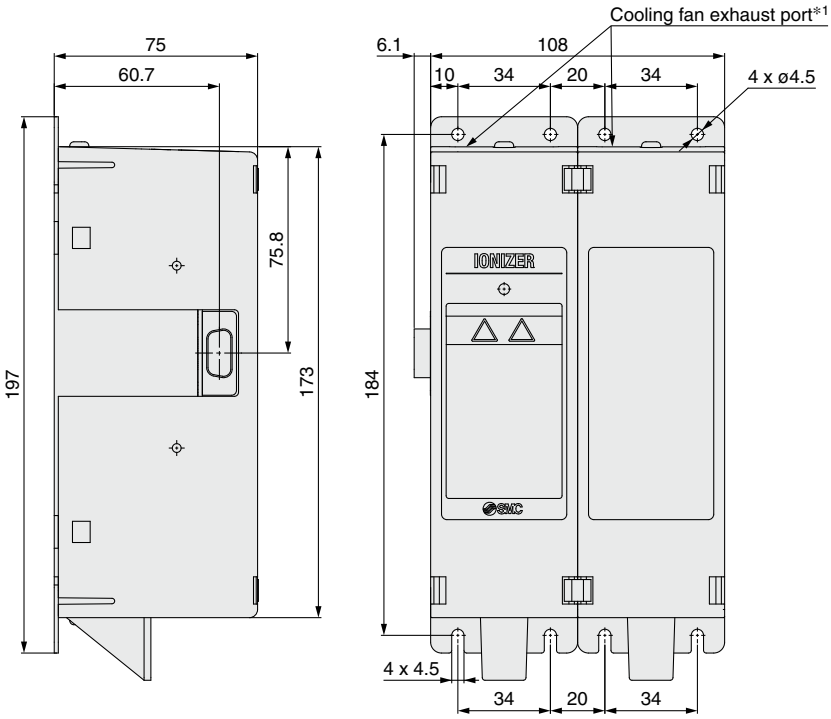

*1 Refer to Mounting (12) in the Specific Product Precautions (page 113).

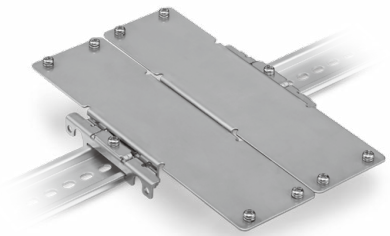

When a DIN rail mounting bracket (IZT40-B3) is used

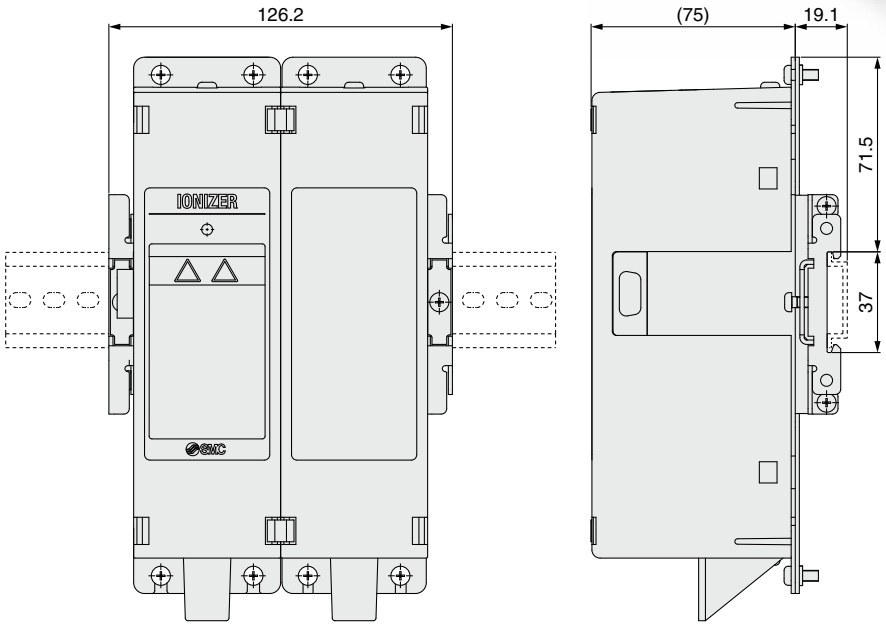

Dimensions

Power supply cable IZT40, 41, 42

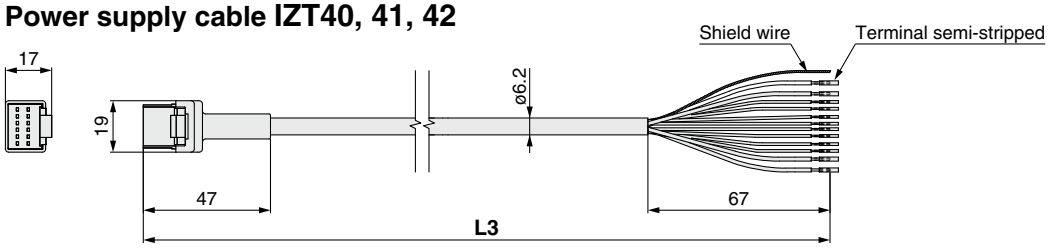

Cable Length L3

Part number	**L3** [mm]
IZT40-CP3	2950
IZT40-CP5	5000
IZT40-CP10	9800
IZT40-CP15	15000

Cable Specifications

No. of cable wires/Size		12 cores/AWG20 (4 cores), AWG28 (8 cores)
Conductor	Nominal cross section	0.54 mm² (4 cores), 0.09 mm² (8 cores)
	O.D.	0.96 mm (4 cores), 0.38 mm (8 cores)
Insulator	O.D.	1.4 mm Brown, Blue
		0.7 mm White, Green, Pink, Purple, Gray, Yellow, Orange, Black
Sheath	Material	Lead-free PVC
	O.D.	6.2 mm

IO-Link power supply cable IZT41-L, 42-L

Entry direction: Straight

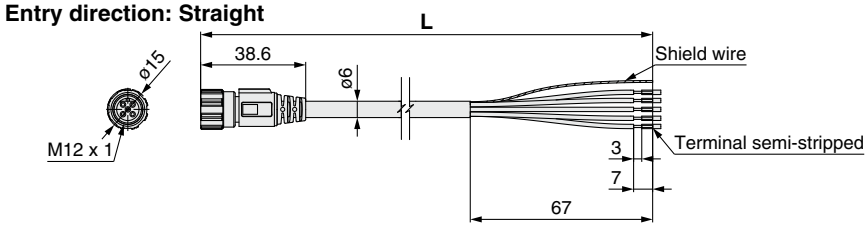

Entry direction: Angled

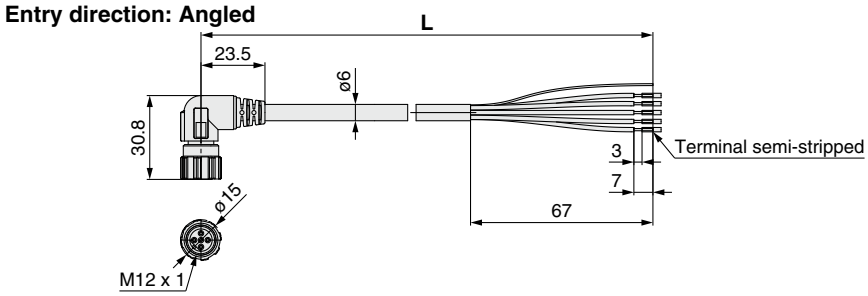

Power Supply Cable Length L

Symbol	Entry direction	Length [m]
IZT41-CPJ	Straight	3
IZT41-CPK		5
IZT41-CPM		10
IZT41-CPS	Angled	3
IZT41-CPT		5
IZT41-CPZ		10

Power Supply Cable Specifications

No. of cable wires/Size		5 cores/AWG22
Conductor	Nominal cross section	0.3 mm²
	O.D.	0.76 mm
Insulator	O.D.	1.3 mm
Sheath	Material	PVC (Lead-free)
	O.D.	6.0 mm

IO-Link communication cable IZT41-L, 42-L

Entry direction: Straight

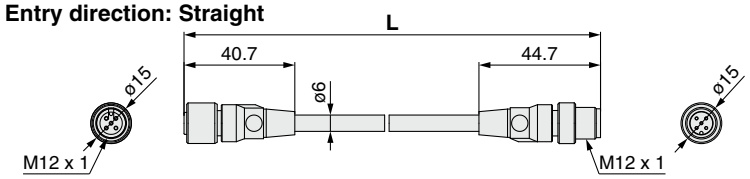

Entry direction: Angled

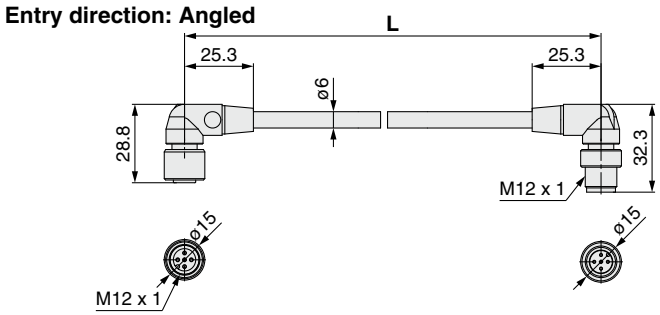

Communication Cable Length L

Symbol	Entry direction	Length [m]
IZT41-CEE	Straight	0.5
IZT41-CEG		1
IZT41-CEH		2
IZT41-CEJ		3
IZT41-CEK		5
IZT41-CEM		10
IZT41-CEP	Angled	0.5
IZT41-CEQ		1
IZT41-CER		2
IZT41-CES		3
IZT41-CET		5
IZT41-CEZ		10

Communication Cable Specifications

No. of cable wires/Size		5 cores/AWG22
Conductor	Nominal cross section	0.3 mm²
	O.D.	0.76 mm
Insulator	O.D.	1.5 mm
Sheath	Material	PVC (Lead-free)
	O.D.	6.0 mm

Dimensions

Separate cable IZT40-CF□

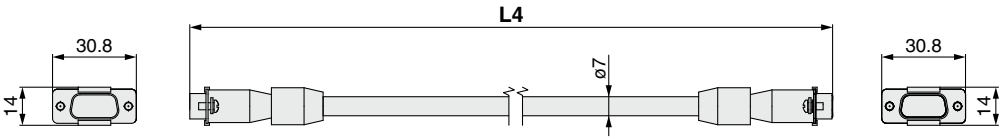

Cable Length L4

Part number	L4 [mm]
IZT40-CF1	1000
IZT40-CF2	2000
IZT40-CF3	3000

When a separate cable is used

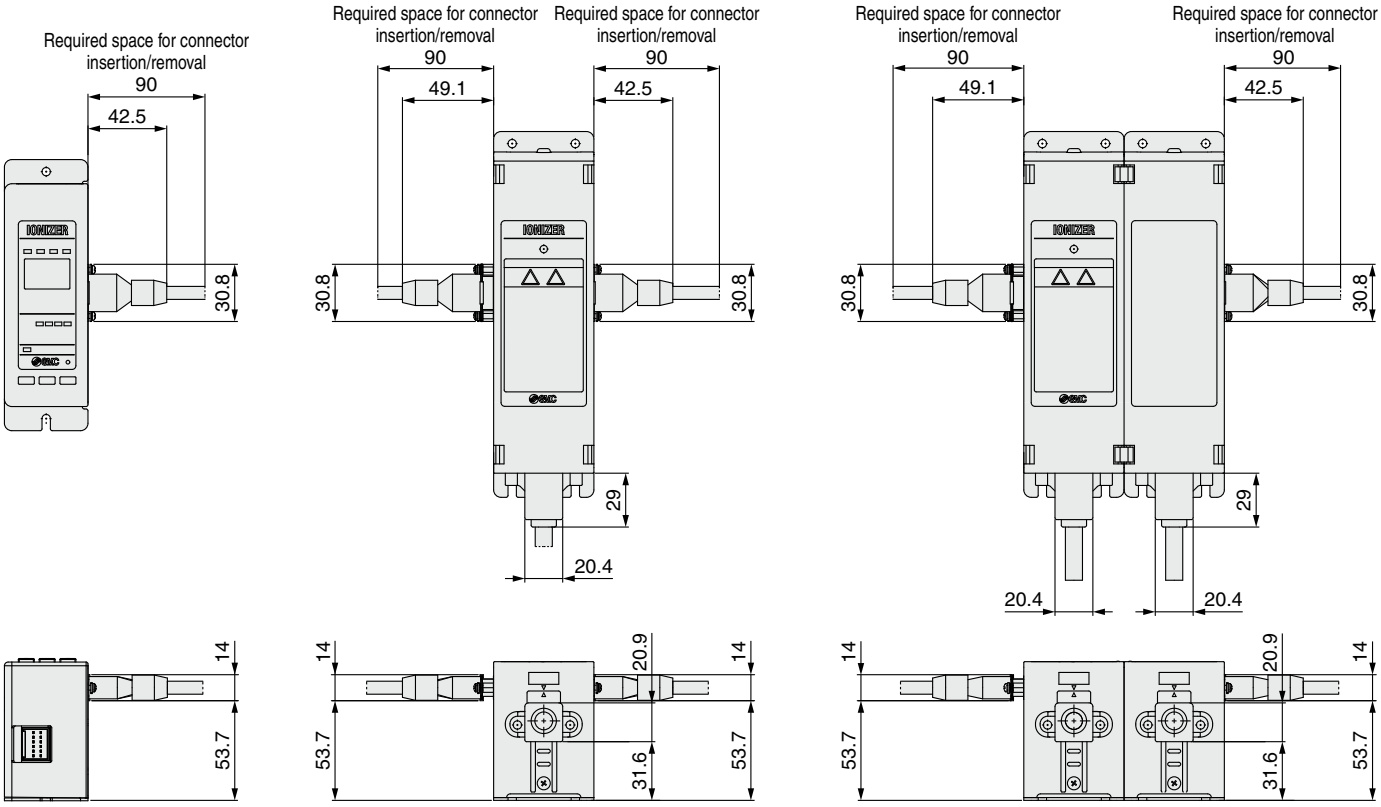

Dimensions

High voltage cable holder

Straight IZT40-E1

Cross-sectional view A-A

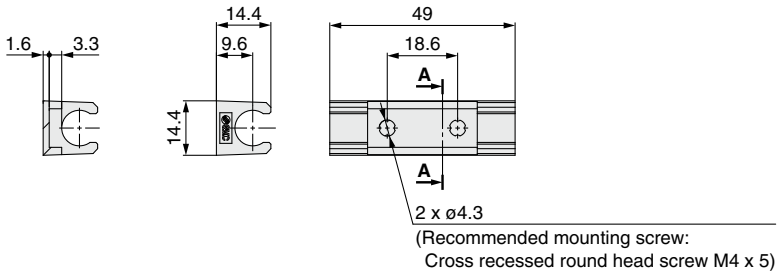

Elbow IZT40-E2

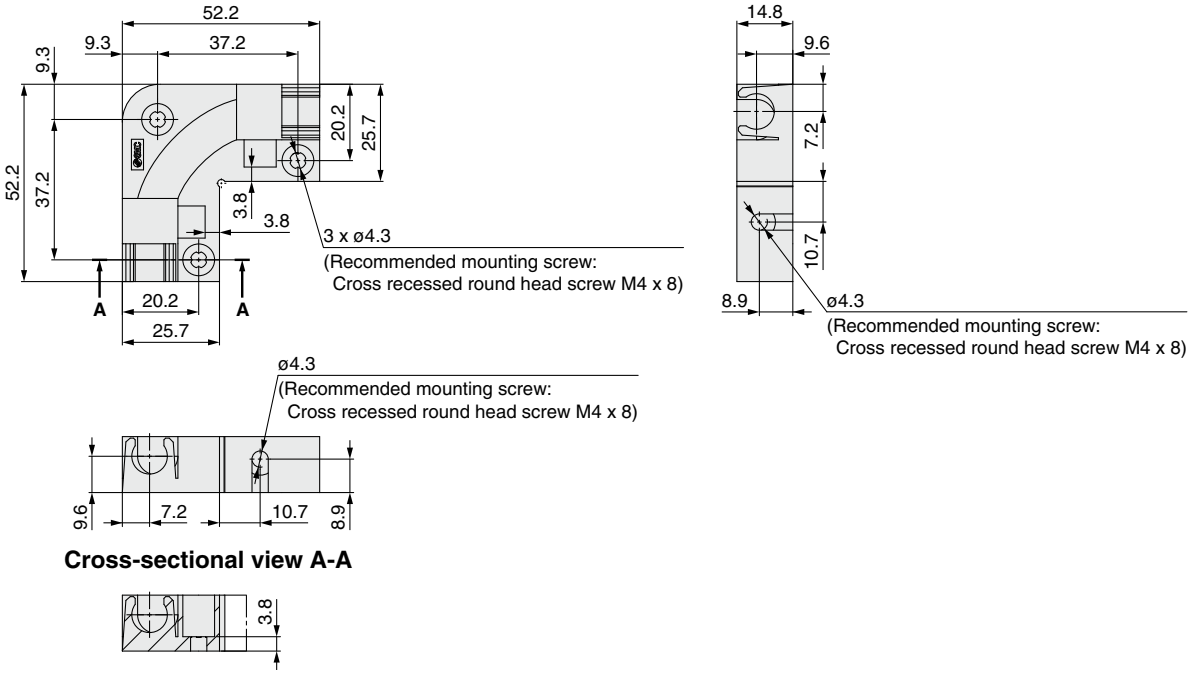

IZT43(-L) Series
Technical Data

Static Neutralization Characteristics

＊ Static neutralization characteristics are based on data using a charged plate (Dimensions: 150 mm x 150 mm, Capacitance: 20 pF) as defined in the U.S. ANSI standards (ANSI/ESD STM3.1-2015). Use this data only as a guideline for model selection because the values vary depending on the material and/or size of the subject.

① Installation Distance and Discharge Time (Discharge Time from 1000 V to 100 V)

IZT43(-L) AC Mode

For cartridges without air purge

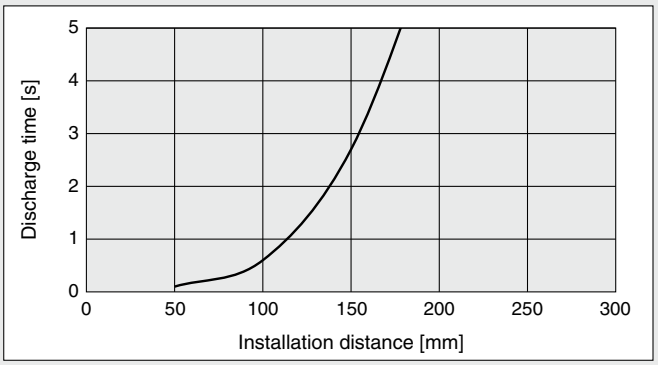

High speed static neutralization cartridge

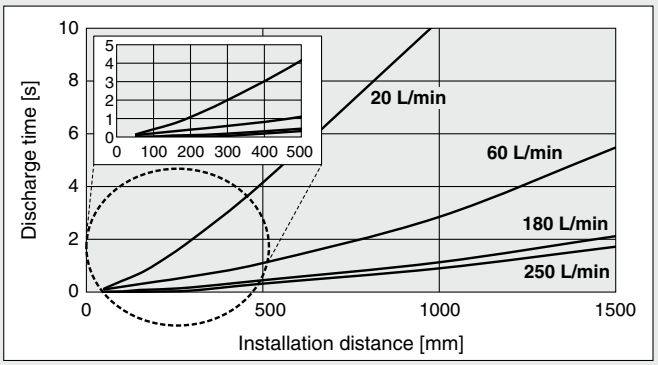

Energy saving static neutralization cartridge

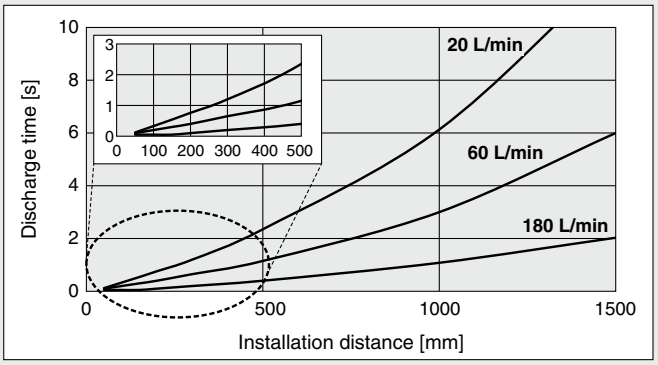

② Static Neutralization Range (Discharge Time from 1000 V to 100 V)

IZT43(-L) Ion Generation Frequency: 30 Hz

1) For cartridges without air purge

For IZT43(-L)-D, L

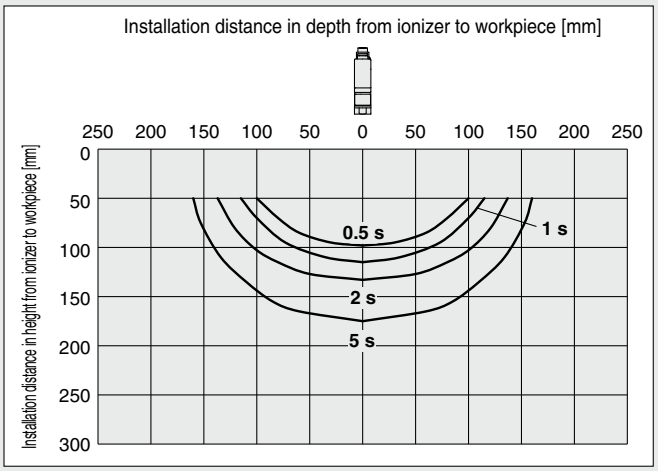

2) High speed static neutralization cartridge, Supply pressure: 0.5 MPa

For IZT43(-L)-D

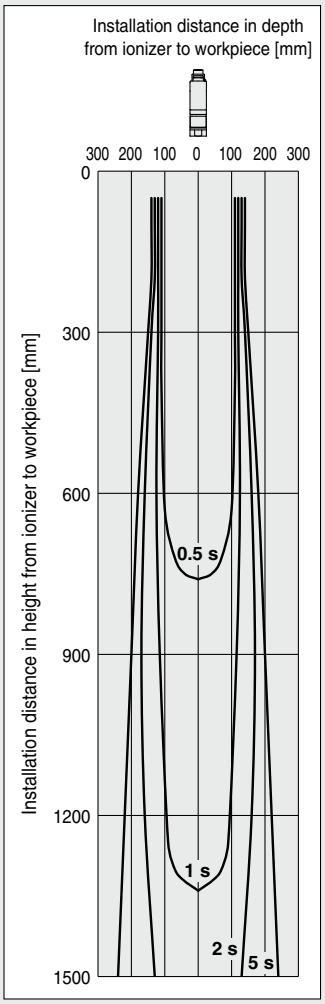

3) Energy saving static neutralization cartridge, Supply pressure: 0.5 MPa

For IZT43(-L)-L

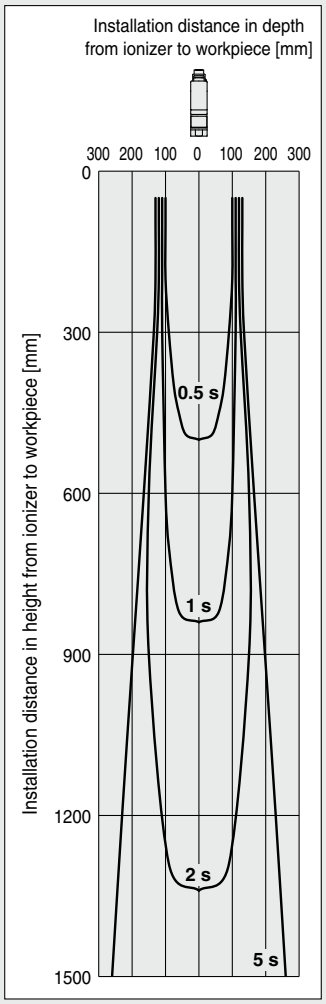

Static Neutralization Characteristics

* Static neutralization characteristics are based on data using a charged plate (Dimensions: 150 mm x 150 mm, Capacitance: 20 pF) as defined in the U.S. ANSI standards (ANSI/ESD STM3.1-2015). Use this data only as a guideline for model selection because the values vary depending on the material and/or size of the subject.

③ Pressure — Flow Rate Characteristics

High speed static neutralization cartridge

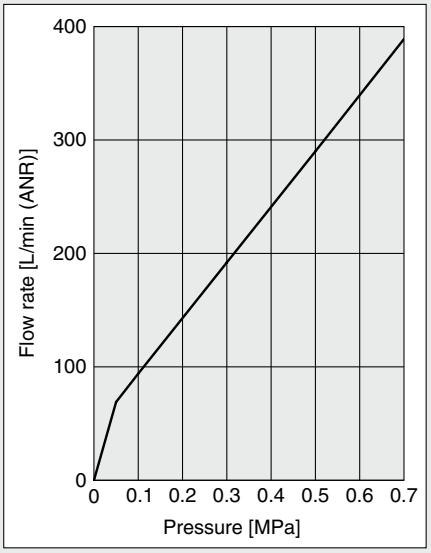

Energy saving static neutralization cartridge

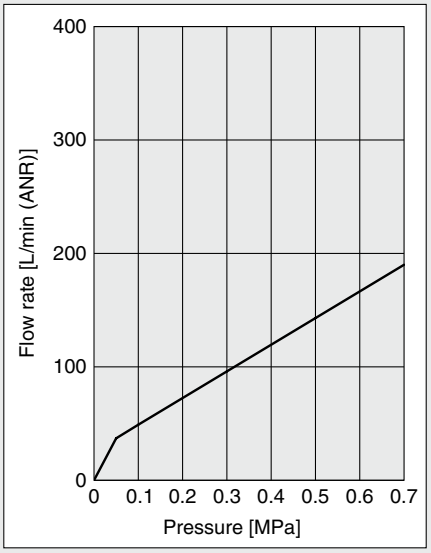

How to measure

a) Air supply

IZT43(-L)-D, L Connecting tube: O.D. ø6 x I.D. ø4

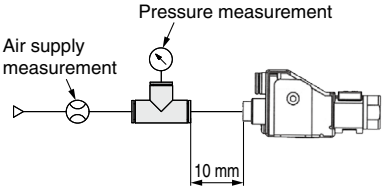

Separate Controller

Nozzle Type Ionizer

IZT43(-L) Series

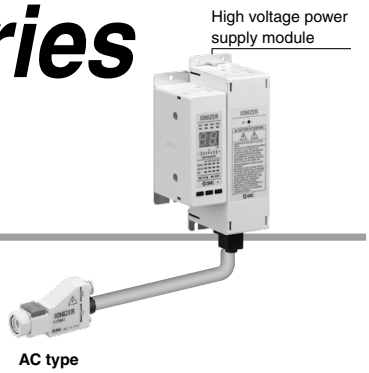

How to Order

Nozzle + **High voltage power supply module** + **Controller**

Transistor input/output

IZT 43 – D 1 6H ❺ – 3 ❻ F U

IO-Link

IZT 43 – D 1 6H L – T R F U

❶ ❷ ❸ ❹ ❼ ❽ ❾ ❿

❶ Model

Symbol	Model
43	AC type

❷ Emitter cartridge type

Symbol	Type
D	High speed static neutralization cartridge
L	Energy saving static neutralization cartridge

❸ High voltage cable length

Symbol	Length [m]
1	1
2	2
3	3

∗ The number of included high voltage cable holders differs depending on the high voltage cable length. (Refer to the table below.)

Number of included high voltage cable holders
⇨ Refer to page 99.

Symbol	Straight	Elbow
1	1	1
2	2	1
3	3	1

❹ One-touch fitting

Symbol	Metric size
6H	ø6 Straight
6L	ø6 Elbow

Symbol	Inch size
7H	ø1/4" Straight
7L	ø1/4" Elbow

❺ Input/Output

Symbol	Input/Output
Nil	NPN
P	PNP

❻ Power supply cable length

Symbol	Length [m]
3	3
5	5
10	10
15	15
N	None

∗ To use an AC adapter, specify "N", and select the AC adapter sold separately.

❼ Power supply cable entry direction/length

Symbol	Entry direction	Length [m]
N	None	
J	Straight	3
K		5
M		10
S	Angled	3
T		5
Z		10

❽ Communication cable entry direction/length

Symbol	Entry direction	Length [m]
N	None	
E	Straight	0.5
G		1
H		2
J		3
K		5
M		10
P	Angled	0.5
Q		1
R		2
S		3
T		5
Z		10

❾ Nozzle bracket
⇨ Refer to page 99.

Symbol	Type
Nil	Without bracket
B	L-bracket
F	Angle adjustment bracket

❿ DIN rail mounting bracket for controller and high voltage power supply module
⇨ Refer to page 99.

Symbol	For Controller	For High voltage power supply module
Nil	None	None
U	Included	Included
W	Included	None
Y	None	Included

For Individual Parts

How to Order

AC type

Combinations

	Nozzle/**IZTN**	High voltage power supply module/**IZTP**	Controller/**IZTC**
	43	43	41
IZT43	●	●	●

Nozzle

IZTN 43 – D 1 6H – F

❶ ❷ ❸ ❹ ❺

⚠ Caution

The transistor input/output specification and the IO-Link specification cannot be installed in combination.

❶ Model

Symbol	Model
43	AC type

❷ Emitter cartridge type

Symbol	Type
D	High speed static neutralization cartridge
L	Energy saving static neutralization cartridge

❸ High voltage cable length

Symbol	High voltage cable length [m]
1	1
2	2
3	3

∗ The number of included high voltage cable holders differs depending on the high voltage cable length. (Refer to the table below.)

Number of included high voltage cable holders ⇨ Refer to page 99.

Symbol	IZT43	
	Straight	Elbow
1	1	1
2	2	1
3	3	1

❹ One-touch fitting

Symbol	Metric size
6H	ø6 Straight
6L	ø6 Elbow

Symbol	Inch size
7H	ø1/4" Straight
7L	ø1/4" Elbow

❺ Nozzle bracket ⇨ Refer to page 99.

Symbol	Type
Nil	Without bracket
B	L-bracket
F	Angle adjustment bracket

Controller

Transistor input/output **IZTC 41 – ☐ 3 – W**

❷ ❸

IO-Link **IZTC 41 – L J G – W**

❶ ❹ ❺ ❻

Transistor input/output | IO-Link

AC, Dual AC type

❶ Model

Symbol	Model
41	AC type, Dual AC type

❷ Input/Output

Symbol	Input/Output
Nil	NPN
P	PNP

❸ Power supply cable length

Symbol	Length [m]
3	3
5	5
10	10
15	15
N	None

❹ Power supply cable entry direction/length

Symbol	Entry direction	Length [m]
N	None	
J	Straight	3
K		5
M		10
S	Angled	3
T		5
Z		10

❺ Communication cable entry direction/length

Symbol	Entry direction	Length [m]
N	None	
E	Straight	0.5
G		1
H		2
J		3
K		5
M		10
P	Angled	0.5
Q		1
R		2
S		3
T		5
Z		10

❻ DIN rail mounting bracket

⇨ Refer to page 99.

Symbol	Type
Nil	None
W	Included

High voltage power supply module

Transistor input/output **IZTP 43 – Y**

IO-Link **IZTP 43 – L – Y**

❶ ❷

AC type

❶ Model

Symbol	Model
43	AC type (For Nozzle)

❷ DIN rail mounting bracket ⇨ Refer to page 99.

Symbol	Type
Nil	None
Y	Included

Specifications

Ionizer Specifications

Ion generation method		Corona discharge type
Method of applying voltage		AC, DC*1
Applied voltage		±6000 V
Offset voltage*2		±30 V or less
Air purge	**Fluid**	Air (Clean, dry air)
	Operating pressure	0.7 MPa or less
	Connecting tube size	Metric size: ø6 Inch size: ø1/4"
Current consumption		0.4 A or less (+0.4 A or less per ionizer when connected)
Power supply voltage		24 VDC ±10%
Input signal*3	**NPN specification**	Connected to DC (–) Voltage range: 5 VDC or less Current consumption: 5 mA or less
	PNP specification	Connected to DC (+) Voltage range: 19 VDC to power supply voltage Current consumption: 5 mA or less
Output signal*3	**NPN specification**	Max. load current: 100 mA Residual voltage: 1 V or less (Load current at 100 mA) Max. applied voltage: 26.4 VDC
	PNP specification	Max. load current: 100 mA Residual voltage: 1 V or less (Load current at 100 mA)
IO-Link device*4		Voltage range: 18 to 30 VDC Current consumption: 100 mA or less * For details, refer to the "IO-Link Communication Specifications" table below.
Function		Auto balance, Maintenance detection, High voltage abnormality detection (Ion generation stops when an abnormality is detected.), and Ion generation stop input
Effective static neutralization distance		50 to 2000 mm
Ambient and fluid temperatures	**Controller** **High voltage power supply module** **Nozzle**	0 to 40°C
Ambient humidity		35 to 65%RH (No condensation)
Material	**Controller**	Cover: ABS, Aluminum, Switch: Silicone rubber*3
	High voltage power supply module	ABS, Aluminum
	Nozzle	Housing: PBT, Stainless steel, Emitter cartridge: PBT, Emitter: Tungsten, High voltage cable: Silicone rubber, PVC, Stainless steel
Standards/Directive		CE (EMC directive, RoHS directive), UKCA

*1 Apply cathode or anode to DC.
*2 When air purge is performed between a charged object and an ionizer at a distance of 300 mm
*3 Only applicable to transistor input/output specification products
*4 Only applicable to IO-Link compatible products

IO-Link Communication Specifications

IO-Link type	Device
IO-Link version	V1.1
Configuration file format	IODD file*1
Communication speed	COM2 (38.4 kbps)
Min. cycle time	8.0 ms
Process data length	Input data: 13 bytes, Output data: 9 bytes
On request data communication	Yes
Data storage function	Yes
Event function	Yes
Vendor ID	131 (0 x 0083)
Device ID	581 (0 x 000245)

*1 The configuration file can be downloaded from the SMC website: https://www.smcworld.com

Specifications

Weight

[g]

	Controller	High voltage power supply module
IZT43(-L)	210 (230)	680 (690)

∗ The values in ( ) are for IO-Link compatible products.

Nozzle Weight

[g]

Nozzle		
IZT43	**High voltage cable (1 m)**	200
	High voltage cable (2 m)	310
	High voltage cable (3 m)	440

AC Adapter (Sold Separately)

⇨ Refer to page 100.

Model	IZT40-CG1, IZT40-CG2
Input voltage	100 to 240 VAC, 50/60 Hz
Output current	1.9 A
Ambient temperature	0 to 40°C
Ambient humidity	35 to 65%RH (No condensation)
Weight	375 g
Safety standards	IEC 62368-1

Construction

IZT43(-L) series

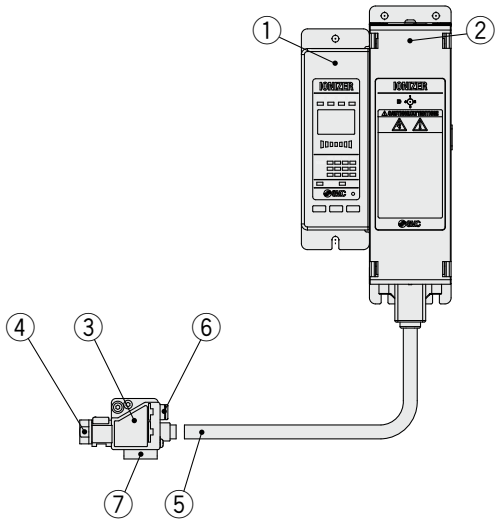

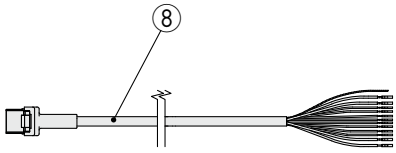

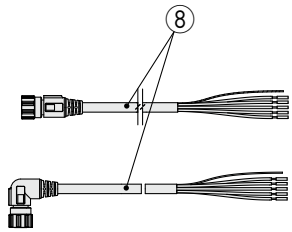

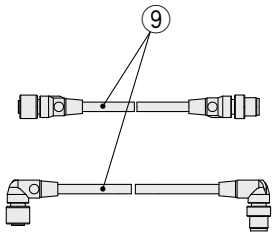

No.	Description
1	**Controller**
2	**High voltage power supply module**
3	**Nozzle**
4	**Emitter cartridge**
5	**High voltage cable**
6	**One-touch fitting**
7	**Bracket**
8	**Power supply cable**
9	**Communication cable**

Accessories (for Individual Parts)

Emitter cartridge (For IZT43(-L))

IZT43 − N D

Emitter cartridge type/ Emitter material

Symbol	Type	Material
D	High speed static neutralization cartridge	Tungsten
L	Energy saving static neutralization cartridge	Tungsten

Tungsten (Color: White)

Cartridge color	Emitter material
White	Tungsten

Nozzle bracket (For IZT43(-L))

IZT43 − B L1

Nozzle bracket

Symbol	Type
L1	L-bracket
L2	Angle adjustment bracket

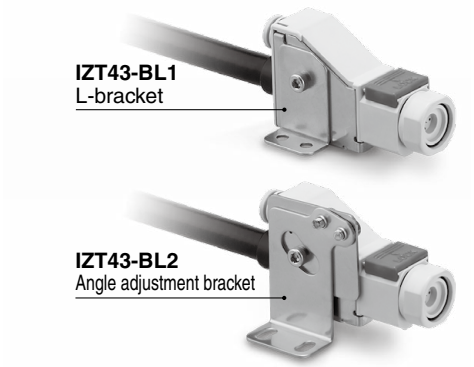

Power supply cable (IZT43)

IZT40 − CP 3

Cable specifications
⇨ Refer to page 108.

Power supply cable length

Symbol	Length [m]
3	3
5	5
10	10
15	15

IO-Link power supply cable (IZT43-L)

IZT41 − CP J

Power supply cable entry direction/length

Symbol	Entry direction	Length [m]
J	Straight	3
K		5
M		10
S	Angled	3
T		5
Z		10

IO-Link communication cable (IZT43-L)

IZT41 − CE G

Communication cable entry direction/length

Symbol	Entry direction	Length [m]
E	Straight	0.5
G		1
H		2
J		3
K		5
M		10
P	Angled	0.5
Q		1
R		2
S		3
T		5
Z		10

DIN rail mounting bracket for controller and high voltage power supply module

IZT40 − B 1

DIN rail mounting bracket

Symbol	Type
1	For Controller
2	For High voltage power supply module

For Controller

IZT40-B1

For High voltage power supply module

IZT40-B2

High voltage cable holder

IZT40 − E 1

High voltage cable holder

Symbol	Type
1	Straight
2	Elbow

Straight

IZT40-E1

Elbow

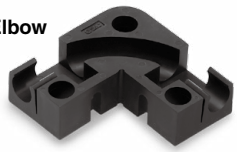

IZT40-E2

Accessories Sold Separately

Body assembly (For IZT43(-L))

IZT43 – A001 – D 6H

Emitter cartridge type

Symbol	Type
D	High speed static neutralization cartridge
L	Energy saving static neutralization cartridge

One-touch fitting

Symbol	Metric size
6H	ø6 Straight
6L	ø6 Elbow

Symbol	Inch size
7H	ø1/4" Straight
7L	ø1/4" Elbow

High voltage cable assembly (For IZT43(-L))

IZT43 – A002 – 1

High voltage cable length

Symbol	Length [m]
1	1
2	2
3	3

AC adapter (IZT43)

IZT40 – CG 1

AC adapter

Symbol	Type
1	With AC cord
2	Without AC cord

∗ An AC cord is only for use in Japan. (Rated voltage 125 V, Plug JIS C 8303, Inlet IEC 60320-C6) The external input/output function cannot be used when an AC adapter is being used.
∗ Cannot be used for the IO-Link specification

AC adapter

Separate cable (IZT43)

IZT40 – CF 1

Cable length

Symbol	Length [m]
1	1
2	2
3	3

Cleaning kit (For IZT43)

IZT43 – M2

Replacement felt pad: IZT43-A003
Replacement rubber grindstone: IZT43-A004

Wiring: IZT43(-L)

IZT43

Cable color	Signal name	Signal direction	Description
Brown	DC (+)	IN	Connects to the power supply to operate the product
Blue	DC (–)	IN	
Green	F.G.	—	Frame ground of the product. Make sure to ground with a resistance value of 100 Ω or less to use it as a reference electric potential for the offset voltage. If not grounded, sufficient performance cannot be obtained and equipment failure may result.
Pink	Ion generation stop signal CH1	IN	Signal input to turn ion generation of each bar (CH1 to 4) ON/OFF NPN specification: Stops generating ions by connecting to 0 V (Starts generating ions when disconnected) PNP specification: Stops generating ions by connecting to 24 VDC (Starts generating ions when disconnected)
Gray	Ion generation stop signal CH2	IN	
Yellow	Ion generation stop signal CH3	IN	
Purple	Ion generation stop signal CH4	IN	
White	Maintenance detection signal	OUT (A contact)	Turns ON when emitters need cleaning
Black	Error signal	OUT (B contact)	Turns OFF in case of power supply failure, high voltage failure, CPU failure, communication failure, cooling fan motor failure, output signal overcurrent, or inconsistent or CH setting duplication or non-connection of high voltage power supply module (ON when there is no problem)
Orange	—	—	—

IZT43-L: IO-Link Power Supply Cable

No.	Cable color	Signal name	Description
1	Brown	DC (+)	Connects to the power supply to operate the product
2			
3	Blue	DC (–)	
4			
5	Green	F.G.	Frame ground of the product. Make sure to ground with a resistance value of 100 Ω or less to use it as a reference electric potential for the offset voltage. If not grounded, sufficient performance cannot be obtained and equipment failure may result.

∗ Refer to the power supply cable dimensions on page 108 for the cable specifications.

IZT43-L: IO-Link Communication Cable

No.	Signal name	Description
1	L+	Power supply for IO-Link
2	—	—
3	L–	Power supply for IO-Link
4	C/Q	—
5	—	—

Frequencies

Series	IZT43(-L)
Controller	IZTC41(-L)
Frequency [Hz]	1
	3
	5
	8
	10
	15
	20
	30
	DC+
	DC–

Wiring Circuit: IZT43-L

Controller (IO-Link)

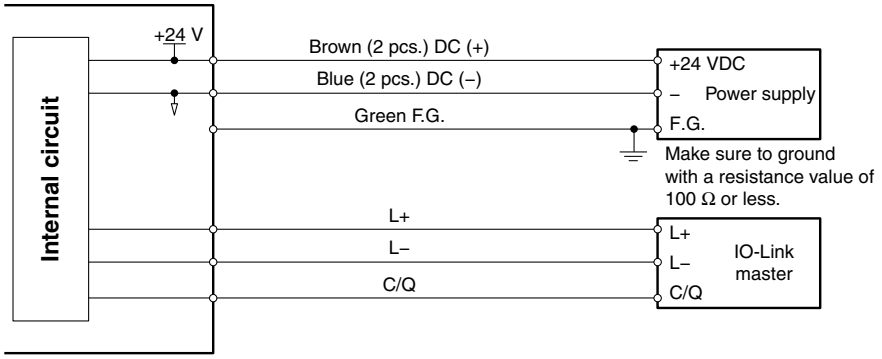

Wiring Circuit: IZT43

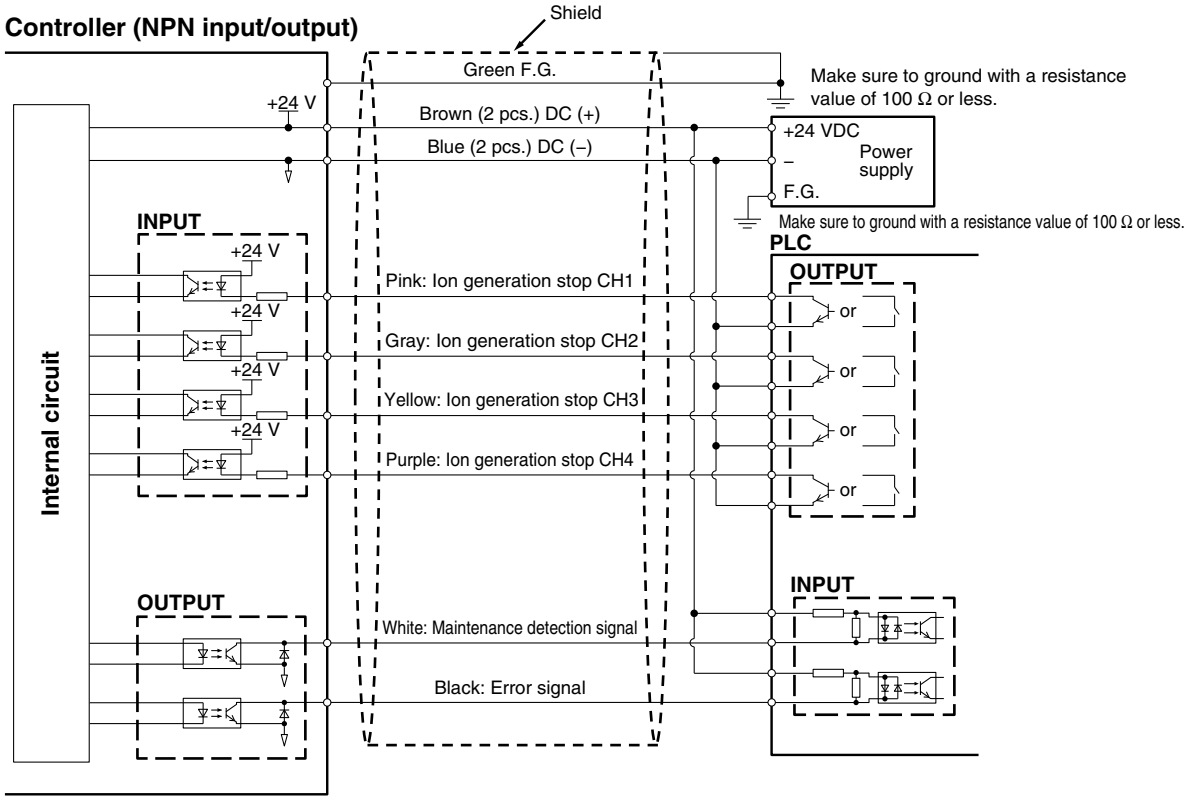

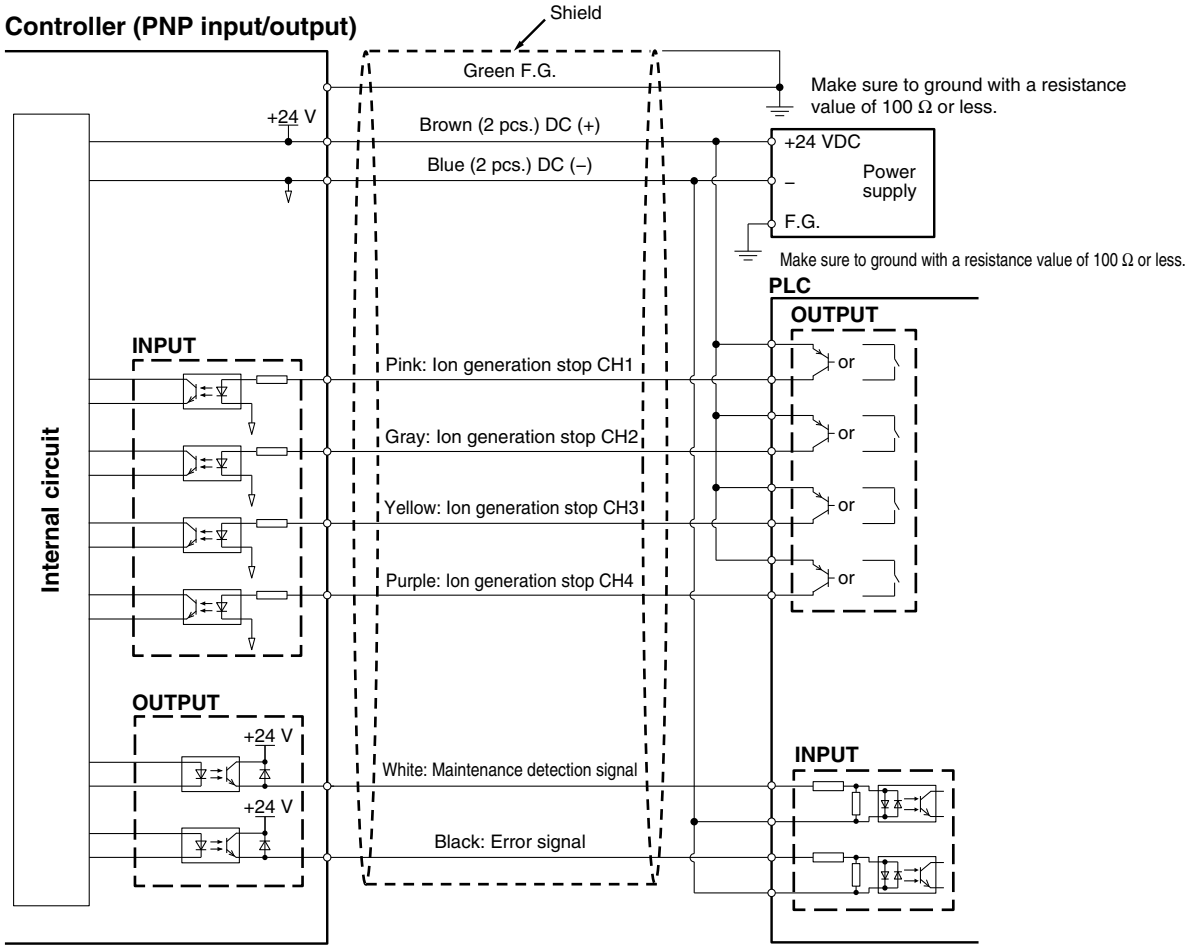

Dimensions

Ionizer IZT43(-L)

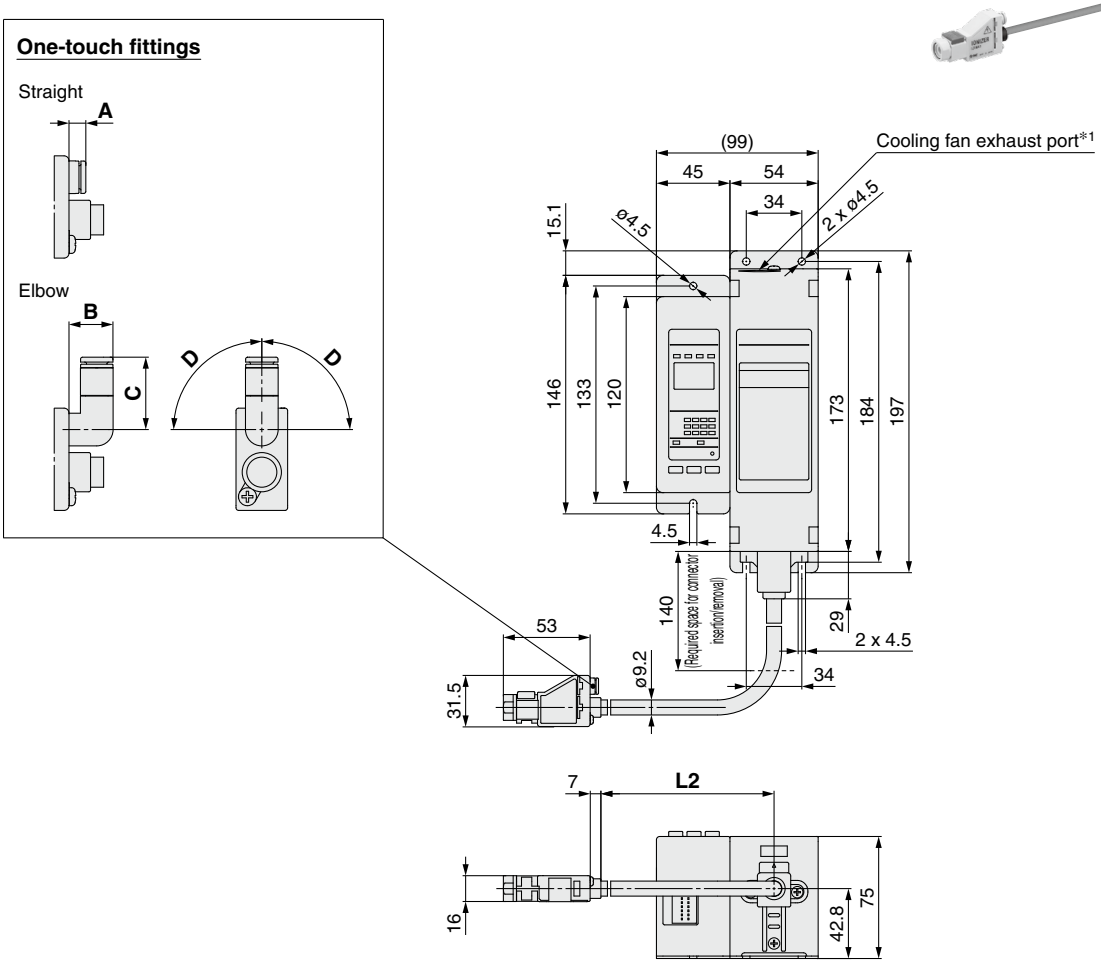

*1 Refer to Mounting (12) in the Specific Product Precautions (page 113).

High Voltage Cable Length L2

Symbol	L2 [mm]
1	1000
2	2000
3	3000

One-touch Fittings

Straight [mm]

	Applicable tubing O.D.	A
Metric	ø6	7
Inch	ø1/4"	10

Elbow [mm]

	Applicable tubing O.D.	B	C	D
Metric	ø6	14	23	105°
Inch	ø1/4"	14	26	105°

Dimensions

L-bracket IZT43-BL1

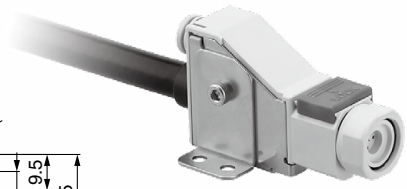

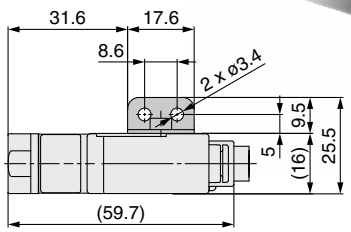

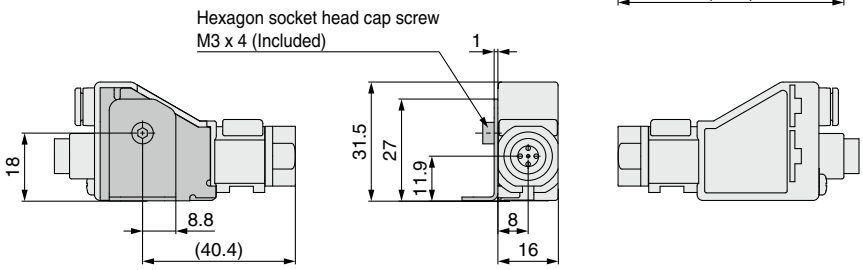

Angle adjustment bracket IZT43-BL2

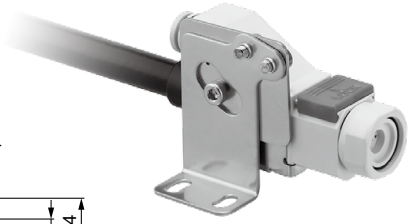

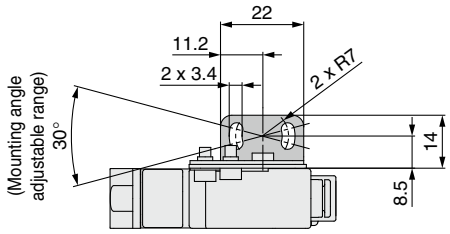

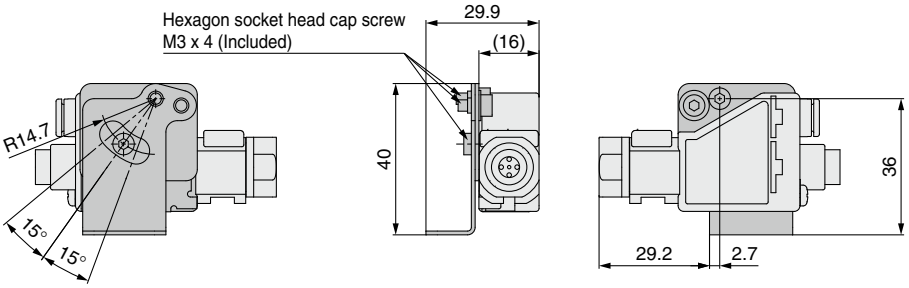

When adjusting the angle

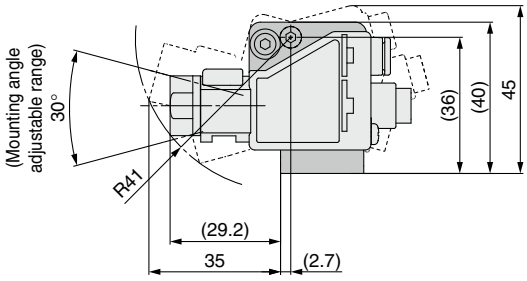

Dimensions

Controller IZT43

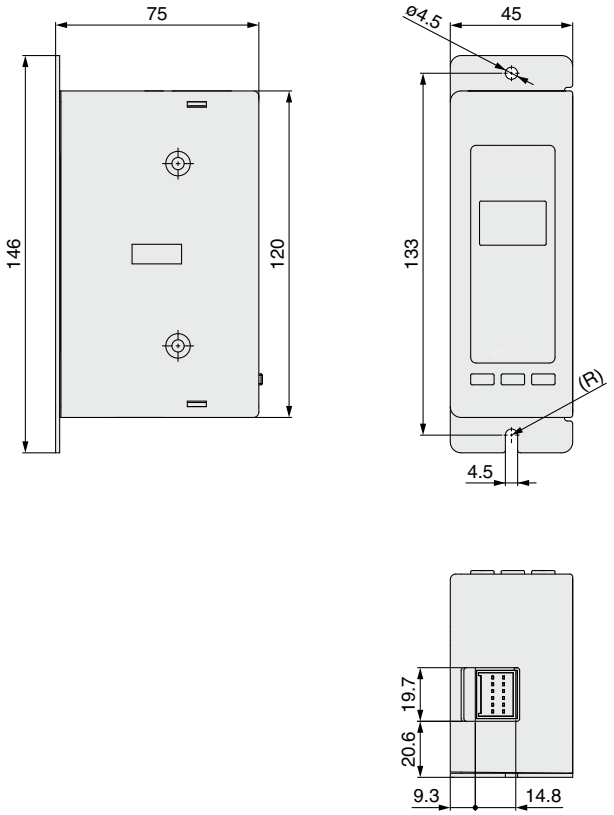

When a power supply cable is inserted

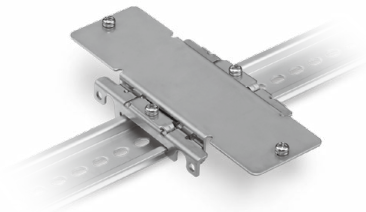

When a DIN rail mounting bracket (IZT40-B1) is used

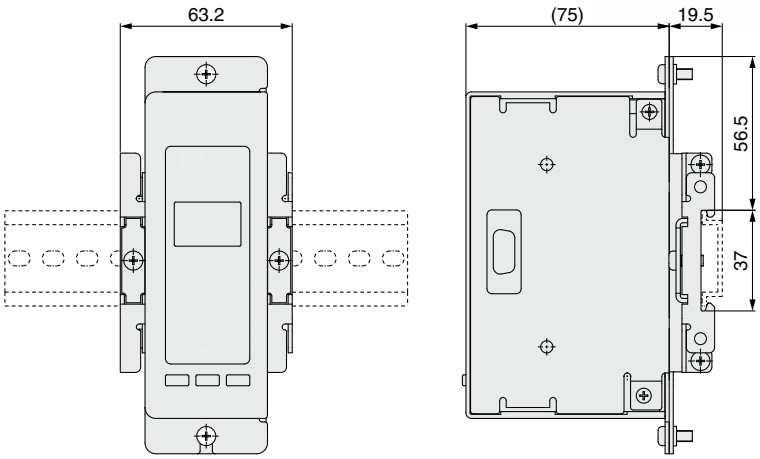

Dimensions

Controller IZT43-L

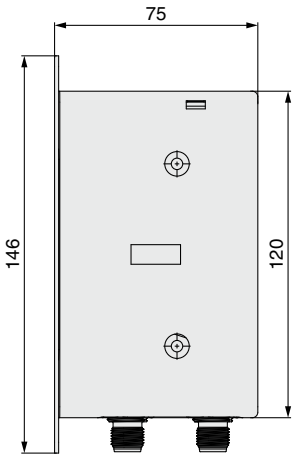

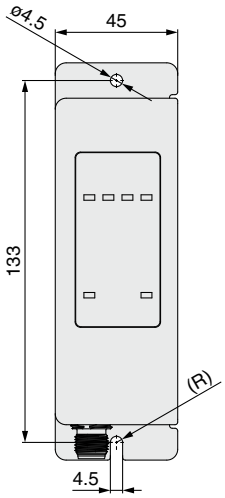

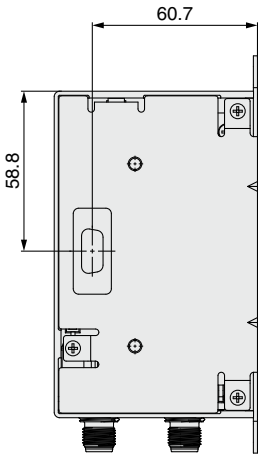

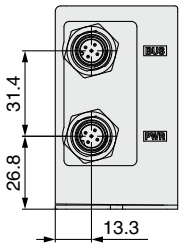

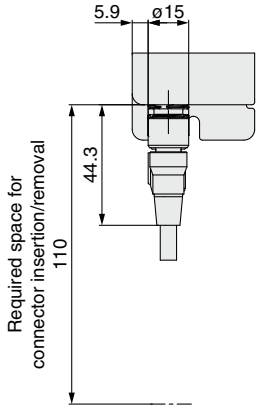

When a straight cable is inserted

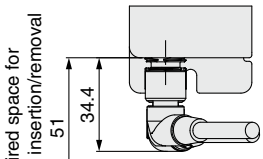

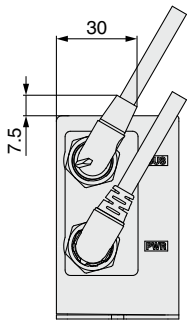

When angled cables are inserted

When a DIN rail mounting bracket (IZT40-B1) is used

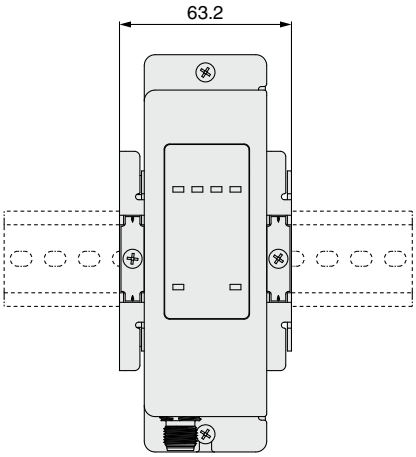

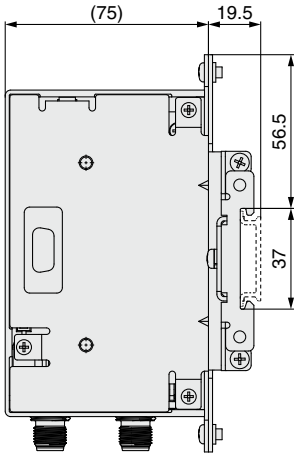

Dimensions

High voltage power supply module for IZT43(-L)

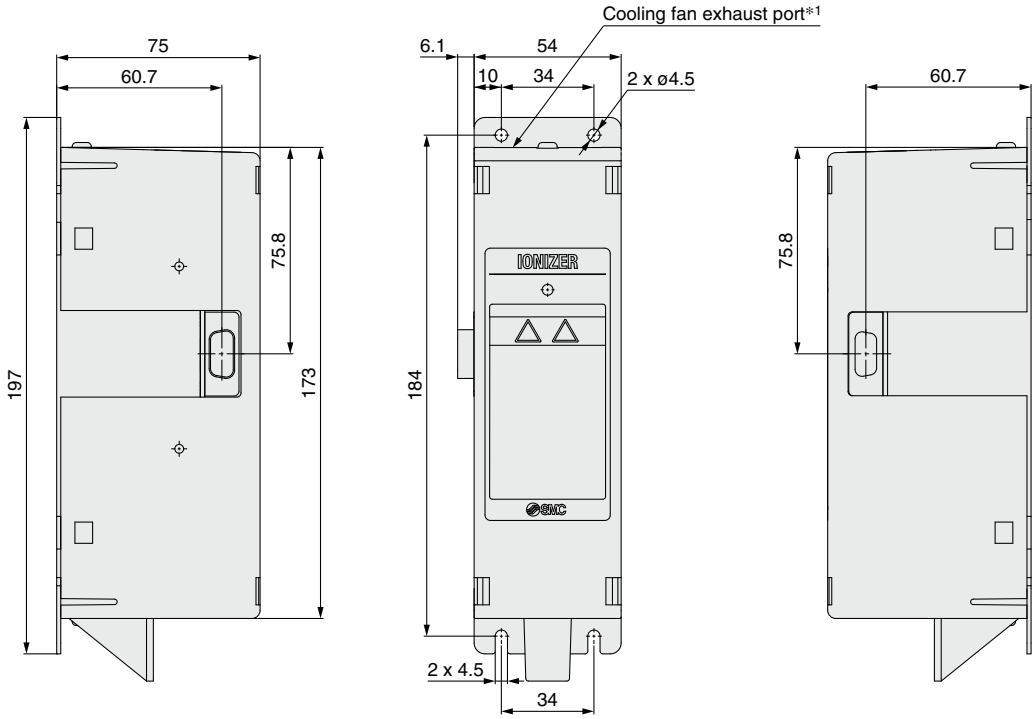

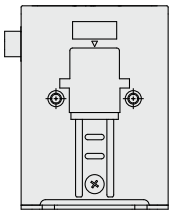

*1 Refer to Mounting (12) in the Specific Product Precautions (page 113).

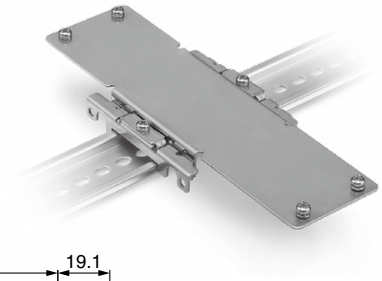

When a DIN rail mounting bracket (IZT40-B2) is used

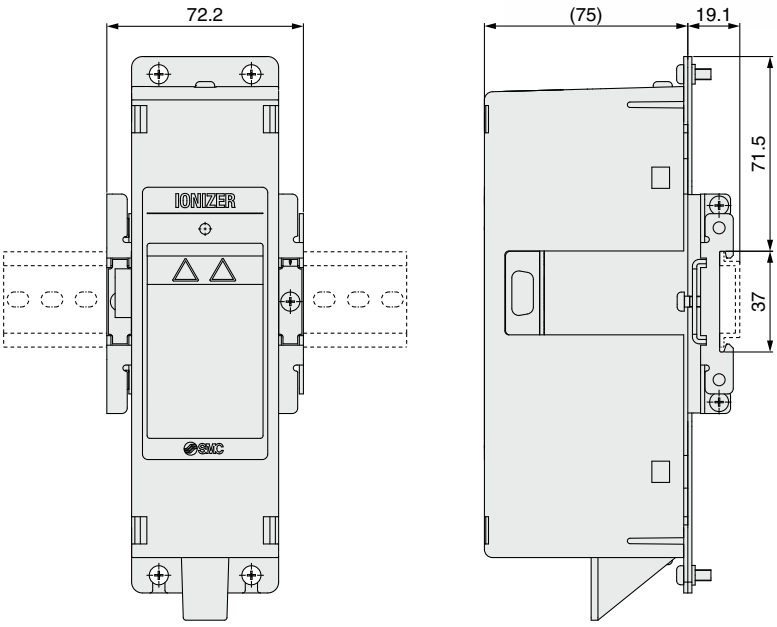

Dimensions

Power supply cable IZT43

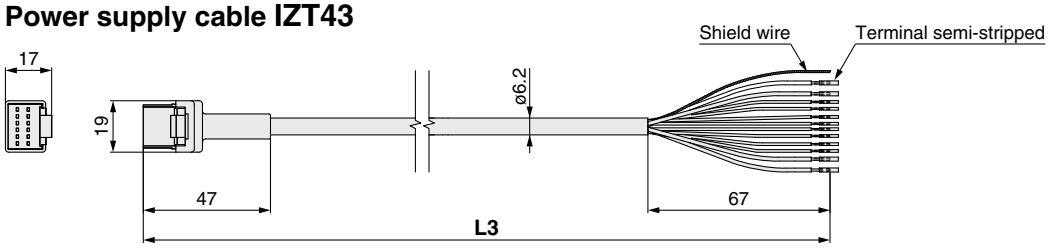

Cable Length L3

Part number	L3 [mm]
IZT40-CP3	2950
IZT40-CP5	5000
IZT40-CP10	9800
IZT40-CP15	15000

Cable Specifications

No. of cable wires/Size		12 cores/AWG20 (4 cores), AWG28 (8 cores)
Conductor	Nominal cross section	0.54 mm² (4 cores), 0.09 mm² (8 cores)
	O.D.	0.96 mm (4 cores), 0.38 mm (8 cores)
Insulator	O.D.	1.4 mm Brown, Blue
		0.7 mm White, Green, Pink, Purple, Gray, Yellow, Orange, Black
Sheath	Material	Lead-free PVC
	O.D.	6.2 mm

IO-Link power supply cable IZT43-L

Entry direction: Straight

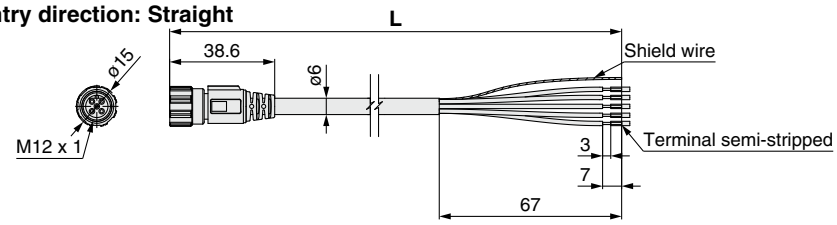

Entry direction: Angled

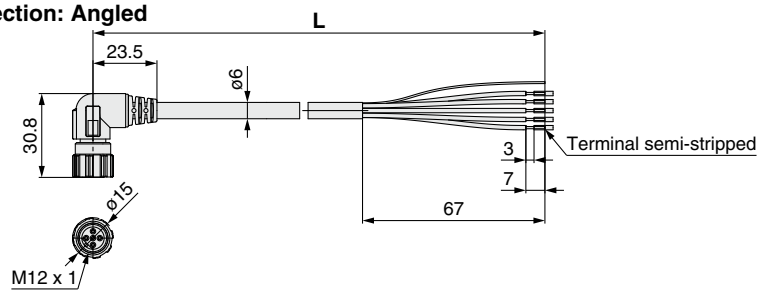

Power Supply Cable Length L

Symbol	Entry direction	Length [m]
IZT41-CPJ	Straight	3
IZT41-CPK		5
IZT41-CPM		10
IZT41-CPS	Angled	3
IZT41-CPT		5
IZT41-CPZ		10

Power Supply Cable Specifications

No. of cable wires/Size		5 cores/AWG22
Conductor	Nominal cross section	0.3 mm²
	O.D.	0.76 mm
Insulator	O.D.	1.3 mm
Sheath	Material	PVC (Lead-free)
	O.D.	6.0 mm

IO-Link communication cable IZT43-L

Entry direction: Straight

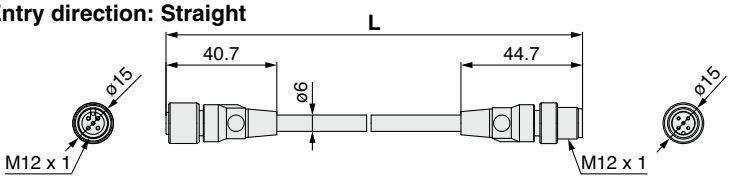

Entry direction: Angled

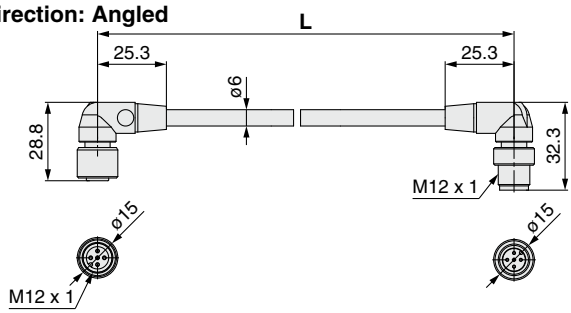

Communication Cable Length L

Symbol	Entry direction	Length [m]
IZT41-CEE	Straight	0.5
IZT41-CEG		1
IZT41-CEH		2
IZT41-CEJ		3
IZT41-CEK		5
IZT41-CEM		10
IZT41-CEP	Angled	0.5
IZT41-CEQ		1
IZT41-CER		2
IZT41-CES		3
IZT41-CET		5
IZT41-CEZ		10

Communication Cable Specifications

No. of cable wires/Size		5 cores/AWG22
Conductor	Nominal cross section	0.3 mm²
	O.D.	0.76 mm
Insulator	O.D.	1.5 mm
Sheath	Material	PVC (Lead-free)
	O.D.	6.0 mm

Dimensions

Separate cable IZT40-CF□

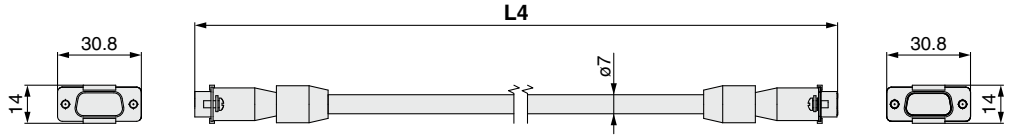

Cable Length L4

Part number	**L4** [mm]
IZT40-CF1	1000
IZT40-CF2	2000
IZT40-CF3	3000

When a separate cable is used

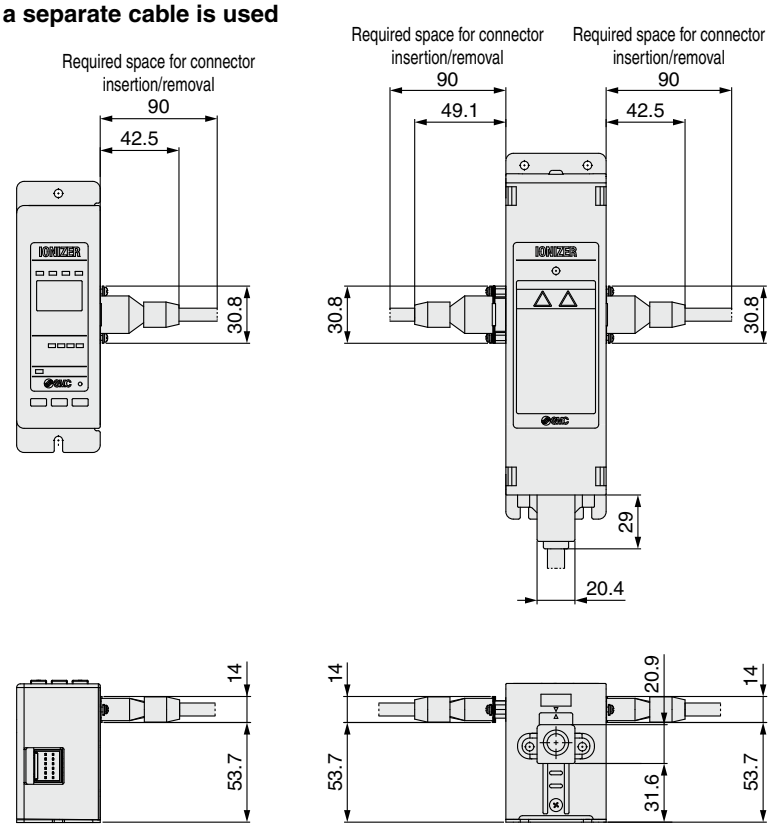

Dimensions

High voltage cable assembly IZT43-A002-□

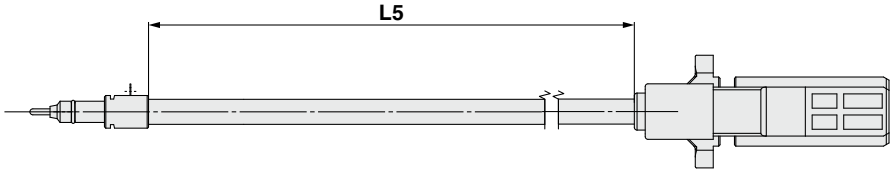

Cable Length L5

Part number	L5 [mm]
IZT43-A002-1	1000
IZT43-A002-2	2000
IZT43-A002-3	3000

High voltage cable holder

Straight IZT40-E1

Cross-sectional view A-A

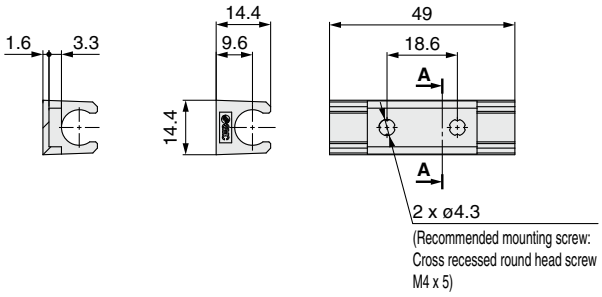

Elbow IZT40-E2

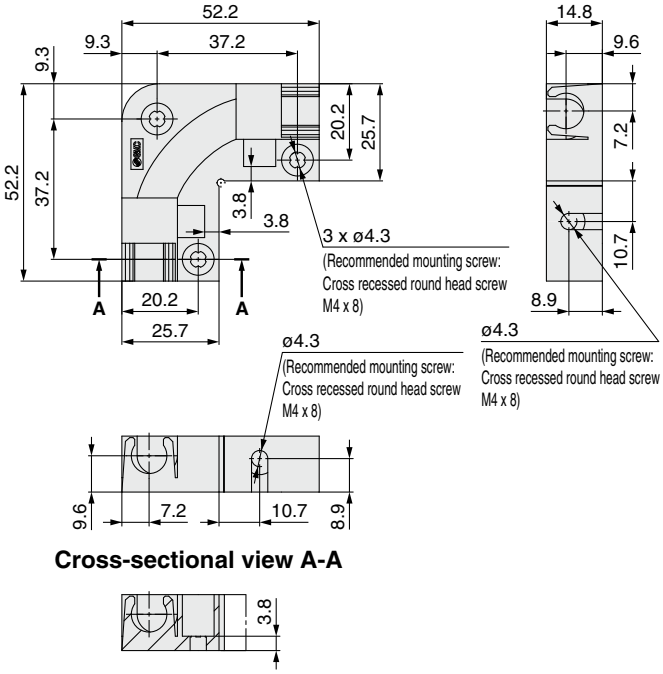

IZT40/41(-L)/42(-L)/43(-L) Series
Specific Product Precautions 1

Be sure to read this before handling the products. Refer to page 227 for safety instructions.

Selection

⚠ Warning

1. This product is intended to be used with general factory automation (FA) equipment.
- If considering using the product for other applications (especially those indicated in Warning (4) in the safety instructions), please consult with SMC beforehand.

2. Use within the specified voltage and temperature ranges.
- Using outside of the specified voltage can cause a malfunction, damage, electric shock, or fire.

3. Use clean compressed air as fluid. (A compressed air quality of Class 2.4.3, 2.5.3, 2.6.3, or higher according to ISO 8573-1:2010 (JIS B 8392-1:2012) is recommended for operation.)
- This product is not explosion proof. Never use flammable gases or explosive gases as a fluid and never use this product in the presence of such gases.
- Please contact us when fluids other than compressed air are used.

4. This product is not explosion-protected.
- Never use this product in locations where the explosion of dust is likely to occur or flammable or explosive gases are used. This can cause a fire.

⚠ Caution

1. Clean specification is not available with this product.
- A minute amount of particles are generated due to wearing of the emitters while the product is operating.
- When bringing into a clean room, confirm the required cleanliness before use.

Mounting

⚠ Warning

1. Reserve enough space for maintenance, piping, and wiring.
- Please take into consideration that the connector connecting part, plug connecting part, and One-touch fittings for supplying air need enough space for the cable and air tubing to be easily attached/detached.
- To avoid unreasonable stress applied to the connector mounting part, plug connecting part, and One-touch fitting mounting part, bending of the cable or air tubing should be more than the min. bending radius.
- If the cable is bent in an acute angle or load is applied to the cable repeatedly, it may cause a malfunction, wire breakage, or fire.

[Min. bending radius] Power supply cable: 40 mm
Power supply cable: 48 mm (IO-Link)
Communication cable: 40 mm (IO-Link)
Separate cable (Option): 40 mm
High voltage cable: 30 mm

∗ Shown above is wiring with the fixed min. allowable bending radius and at a temperature of 20°C. A bend radius should be larger at a temperature lower than 20°C. Regarding the min. bending radius of the air tubing, refer to the operation manual or catalog for air tubing.

2. Installation of the high voltage cable
- Use the specified cable holder (IZT40-E1 or IZT40-E2) for installing high voltage cables.
- Follow the instructions below when installing high voltage cables. If these are not followed, the insulation performance of the high voltage cable will decrease, causing failure of the ionizer, which may lead to an electric shock or fire.
  a. Do not cut the cable.
  b. Keep to the min. bending radius of the cable.
  c. Do not tighten the cable too much with cable ties. Do not deform the cable by placing any object on the cable.
  d. Avoid the problems of cable runaway such as in a cable duct.
  e. Do not twist or damage the cable. If the cable is damaged, it should be replaced.

IZT40/41(-L)/42(-L)/43(-L) Series
Specific Product Precautions 2

Be sure to read this before handling the products. Refer to page 227 for safety instructions.

Mounting

⚠ Warning

3. Fix the high voltage cable connector using 2 screws included as an accessory.
- Fix the connector using 2 cross recessed round head screws (M4 x 10 L) with the specified tightening torque. (Refer to the table below.)

4. Be sure to fix the high voltage cable plug with a screw.

5. Mount on a flat surface and do not apply impact load or excessive external force.
- If there are irregularities, cracks or height differences, excessive stress will be applied to the housing or brackets, resulting in damage or other trouble.
- Do not drop or apply a strong shock. Otherwise, damage or an accident can occur.

6. Install the product so that the bar does not have an excessive deflection.
- For a bar length of 820 mm or more, be sure to support the bar at both ends and in the middle by using brackets (IZT40-BM1 or IZT40-BM2). If the bar is held only at the both ends, self-weight of the bar causes deflection, resulting in damage or deformation of the bar.

7. Avoid using in a place where noise (electromagnetic wave surge) is generated.
- If the product is used in an environment where noise is generated, it may lead to a malfunction and deterioration or damage of the internal elements.
- If the presence of noise is suspected, take preventative measures against noise and avoid crossing wires such as power line and high voltage line.

8. Tighten screws with the specified tightening torque.
- If the mounting screws are tightened in excess of the specified torque range, it may damage the screws or mounted areas.
- If the tightening torque is insufficient, the screws may become loose. (Refer to the table below.)

9. Do not touch the emitter directly with fingers or metallic tools.
- Do not touch the emitter with your finger. If the needle sticks to your finger, an electric shock can cause an instantaneous rapid body motion to escape from the shock, causing an injury.
- If the emitter or cartridge is damaged with a tool, the specification will not be met and damage and/or an accident may occur.

⚠ Danger: High Voltage

Caution: High voltage is being supplied to the emitters.
Please do not touch the emitters as there is an electric shock danger with the insertion of contamination into the cartridge.
In addition, one can be injured with evasive actions taken when suddenly removing oneself from the electrical shock danger.

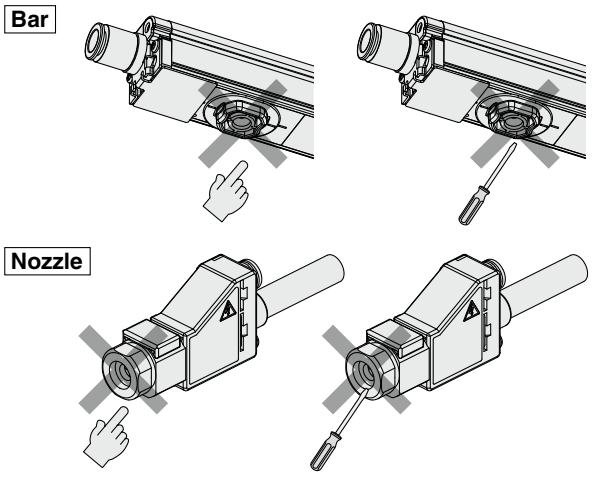

Tightening Torque for Screws

Description		Part number	Screw	Tightening torque
For Bar	End bracket	IZT40-BE□	For fixed angle M4 x 8 L	0.72 to 0.76 N·m
			For fixed bar M4 x 8 L	0.51 to 0.55 N·m
	Intermediate bracket 1	IZT40-BM1	M4 x 16 L	0.72 to 0.76 N·m
	Intermediate bracket 2	IZT40-BM2	M4 x 16 L	0.47 to 0.49 N·m
	High voltage cable connector	IZTB4□-□□□□□-□-□	M4 x 10 L	0.49 to 0.53 N·m
For Nozzle	L-bracket	IZT43-B1	M3 x 4 L	0.61 to 0.65 N·m
	Angle adjustment bracket	IZT43-B2	For fixed angle M3 x 4 L	0.61 to 0.65 N·m
			For fixed nozzle M3 x 4 L	0.61 to 0.65 N·m
	High voltage cable connector	IZTN43-□□□□-□	M4 x 10 L	0.49 to 0.53 N·m
	High voltage cable plug		M3 x 5 L	0.11 to 0.15 N·m
Controller		IZTC40 IZTC41(-L)	M4 x 30 L	0.22 to 0.24 N·m
Separate cable		IZT40-CF□	Spacer	0.40 to 0.60 N·m
			Set screw	0.25 to 0.35 N·m
DIN rail mounting bracket		IZT40-B□	M4 x 6 L	1.30 to 1.50 N·m
Cable holder		IZT40-E□	M4 x 8 L (Recommended length)	0.19 to 0.21 N·m

IZT40/41(-L)/42(-L)/43(-L) Series
Specific Product Precautions 3

Be sure to read this before handling the products. Refer to page 227 for safety instructions.

Mounting

⚠ Warning

10. Do not affix any tape or seals to the controller, high voltage power supply module, bar, and nozzle.
- If the tape or label contains a conductive adhesive or reflective paint, a dielectric phenomenon may occur due to ions arising from such substances, resulting in electrostatic charging or electric leakage, causing a malfunction, damage, electric shock, or fire.

11. Installation should be conducted after turning OFF the power supply and air supply to the controller, high voltage power supply module, bar, and nozzle.
- If installation or adjustment is performed while the power or air is being supplied to the product, an electric shock, failure, or injury can result.

12. The high voltage power supply module uses a fan. A space of 20 mm or more is required from the exhaust port for ventilation. Install the product in a ventilated location so peripheral devices are not affected.

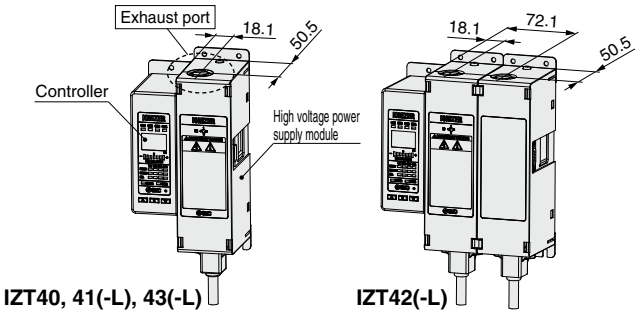

13. Do not apply any excessive force to cables, such as repeated bending, tensioning, or placing a heavy object on the cables.
- It may cause an electric shock, fire, or wire breakage.

14. Do not carry the product by holding its cables.
- It may cause an injury or damage to the product.

⚠ Caution

1. To prevent electric leakage, electric shocks, and other issues, be sure to secure a space of 10 mm or more in every direction around the product when installing it.
- If structures including walls or other ionizers are located between the product and the object to be neutralized, the generated ions will not effectively reach the object, resulting in reduced neutralization speed, erratic offset voltage, etc., which may make it difficult to maintain performance. For maximum neutralization performance, be sure to install the product taking the required installation distance from structures, etc., shown in the figure below into consideration.

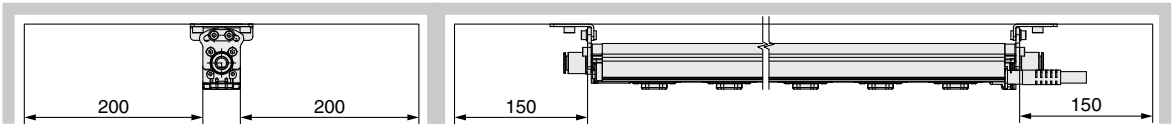

Unit: mm

2. Make sure to confirm the effect of static neutralization after installation.
- The performance of the product varies depending on the surrounding installation and operating conditions. After installation, verify the effects of static neutralization.

3. When installing the IZT41, IZT42, or IZT43 in proximity with an ionizer which operates in DC mode (one polarity, positive or negative), they should be positioned at least 2 meters away from each other.
- When using the AC mode of the IZT41, IZT42, or IZT43 near the ionizer in DC mode, keep clearance of at least the length shown in the figure below between them. The offset voltage (ion balance) may not be adjusted by the built-in sensor due to the ions discharged from the DC mode ionizer.

Bar

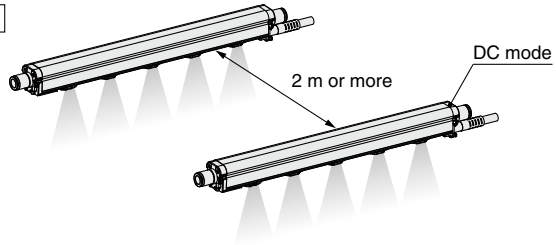

Nozzle

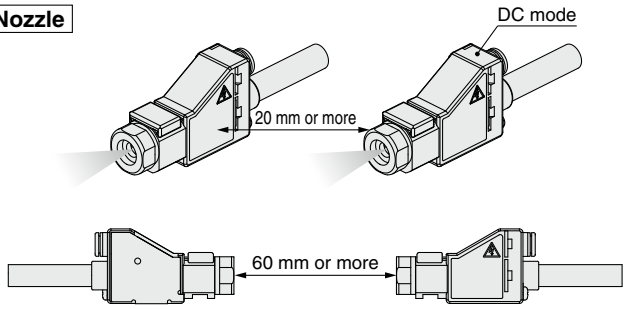

4. Use the specified bracket.

IZT40/41(-L)/42(-L)/43(-L) Series
Specific Product Precautions 4

Be sure to read this before handling the products. Refer to page 227 for safety instructions.

Wiring / Piping

⚠ Warning

1. **Before wiring, ensure that the power supply capacity is larger than the specification and that the voltage is within the specification. Product damage or malfunction can result.**
2. **To maintain product performance, the power supply shall be UL listed Class 2 certified by National Electric Code (NEC) or evaluated as a limited power source provided by UL60950.**
3. **To maintain the product performance, ground the product with a resistance value of 100 Ω or less. If the product is not grounded, it is not possible to secure the performance and may lead to product failure or malfunction.**
4. **Wiring (including insertion and removal of the connector plug (high voltage cable connector, high voltage cable plug)) should never be carried out while the power is being supplied to the product. Otherwise, an electric shock or accident may occur.**
5. **Use the specified cable for connecting the ionizer controller, high voltage power supply module, bar, and nozzle. Do not disassemble or retrofit. Modifying the product may cause accidents such as electric shock, failure, or fire. The product will not be guaranteed if it is disassembled and/or modified.**
6. **Ensure the safety of wiring and surrounding conditions before supplying power.**
7. **Do not connect or disconnect the connector plug (including power source) while the power is being supplied. Failure to follow this procedure may cause product malfunction.**
8. **If the ionizer wiring and high-power lines are routed together, this product may malfunction due to noise. Therefore, use a separate wiring route for this product.**
9. **Confirm that the wiring is correct before operation. Incorrect wiring will lead to product damage or malfunction.**
10. **Flush the piping before use. Before piping this product, please exercise caution to prevent particles, water drops, or oil contents from entering the piping.**

Operating Environment / Storage Environment

⚠ Warning

1. **Use within the fluid temperature and ambient temperature ranges.**
   - Fluid temperature and ambient temperature ranges are; 0 to 40°C for controller, 0 to 40°C for high voltage power supply module, 0 to 50°C for bar, 0 to 40°C for nozzle, and 0 to 40°C for AC adapter.
   - Do not use the product in locations where the temperature may change suddenly even if the ambient temperature range is within the specified limits, resulting in condensation.

Operating Environment / Storage Environment

⚠ Warning

2. **Do not use this product in an enclosed space.**
   - This product utilizes a corona discharge phenomenon. Avoid using in an enclosed space as ozone and nitrogen oxides exist in such places, even though in marginal quantities.
3. **Environments to avoid**
   - Avoid using and storing this product in the following environments as they may cause a failure, fire, etc.
     a. Environments where the ambient temperature is outside of the product specification
     b. Environments where the ambient humidity is outside of the product specification
     c. Environments where abrupt temperature changes may cause condensation
     d. Environments where corrosive gases, flammable gases, or other volatile flammable substances are stored
     e. Environments where the product may be exposed to conductive powder such as iron powder or dust, oil mist, salt, organic solvent, machining chips, particles, cutting oil (including water and any liquids), etc.
     f. Environments where ventilated air from an air conditioner is directly applied to the product
     g. Enclosed or poorly ventilated environments
     h. Environments that are exposed to direct sunlight or heat radiation
     i. Environments where strong electromagnetic noise is generated, such as strong electrical and magnetic fields or supply voltage spikes
     j. Environments where static electricity is generated
     k. Environments where strong, high frequencies are generated
     l. Environments that are subject to potential lightning strikes
     m. Environments where the product may receive direct impact or vibration
     n. Environments where the product may be subjected to forces or weight that could cause physical deformation
4. **Do not use air containing mist or dust.**
   - Air containing mist or dust will cause the performance to decrease and shorten the maintenance cycle.
   - Install an air dryer (IDF series), air filter (AF/AFF series), and/or mist separator (AFM/AM series) to obtain clean compressed air (A compressed air quality of Class 2.4.3, 2.5.3, 2.6.3, or higher according to ISO 8573-1:2010 (JIS B 8392-1:2012) is recommended for operation.).
5. **The controller, high voltage power supply module, bar, nozzle, and AC adapter do not incorporate protection against lightening surges.**
6. **Effects on implantable medical devices**
   - The electromagnetic waves emitted from this product may interfere with implantable medical devices such as cardiac pacemakers and cardioverter defibrillators, resulting in the malfunction of the medical device or other adverse effects.
   - Please exercise extreme caution when operating equipment which may have an adverse effect on your implantable medical device. Be sure to thoroughly read the precautions stated in the catalog, operation manual, etc., of your implantable medical device, or contact the manufacturer directly for further details on what types of equipment need to be avoided.

IZT40/41(-L)/42(-L)/43(-L) Series
Specific Product Precautions 5

Be sure to read this before handling the products. Refer to page 227 for safety instructions.

Maintenance

⚠ Warning

1. Periodically inspect the ionizer and clean the emitters.

- Check the product regularly to make sure it is not operating with undetected failures.
- Maintenance must be performed by an operator who has sufficient knowledge and experience.
- If the product is used for an extended period with dust present on the emitters, the product performance will be reduced.
- An emitter dirt detection function is available with the IZT41, IZT42, and IZT43. When emitter contamination is detected, clean the emitter.
- In cases where the emitter dirt detection function is not used on the IZT41, IZT42, or IZT43, or when the IZT40 is used, perform a neutralizing performance test and set a maintenance cycle for periodic cleaning.
- The emitter contamination level is different depending on the installation environment and supply pressure.
- If the performance is not recovered after cleaning, it is possible that emitters are worn. Replace the emitter cartridge.

⚠ Danger: High Voltage

This product contains a high voltage generation circuit. When performing maintenance or inspection, be sure to confirm that the power supply to the ionizer is turned OFF. Never disassemble or modify the ionizer as this may not only impair the product's functionality but could also cause an electric shock or electric leakage.

2. When cleaning the emitter or replacing the emitter cartridge, be sure to turn OFF the power supply or air supply to the controller, high voltage power supply module, bar, and nozzle.

- Never touch the emitters with the power supplied to the controller, high voltage power supply module, bar, and nozzle. An electric shock may cause an injury.
- If an attempt to replace the emitter cartridges is performed before removing air supply, the emitter cartridges may eject unexpectedly due to presence of the compressed air. Remove supply air before replacing the cartridges.
- If emitter cartridges are not securely mounted to the bar, they may eject or release when air is supplied to the product.
- Securely mount or remove the emitter cartridges referencing the instructions shown to the right.
- Securely mount or remove the emitter cartridges with hands and do not use tools.

  Bar type
  Emitter cartridge tightening torque: 0.2 to 0.3 N·m

  Nozzle type
  Emitter cartridge tightening torque: 0.1 to 0.2 N·m

Bar

Removal of emitter cartridge

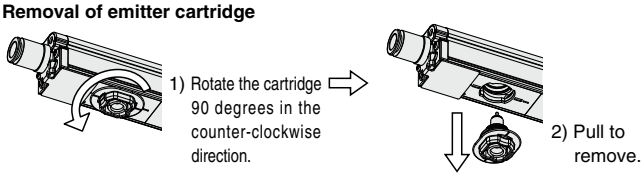

Mounting of emitter cartridge

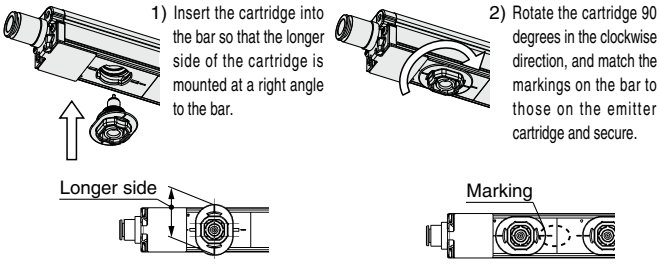

Nozzle

Removal of emitter cartridge

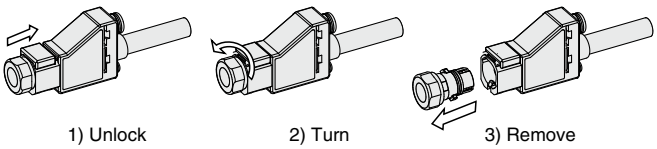

Mounting of emitter cartridge

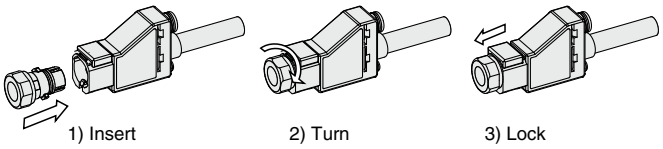

3. Do not disassemble or modify the product.

- Disassembling or modifying the product may cause accidents such as an electric shock, failure, or fire.
- The product will not be guaranteed if it is disassembled and/or modified.

4. Do not operate the product with wet hands.

- Never operate the product with wet hands. It may cause an electric shock or other accidents.

5. When replacing the high voltage cable for the nozzle, be sure to turn OFF the power supply or air supply to the controller, high voltage power supply module, and nozzle.

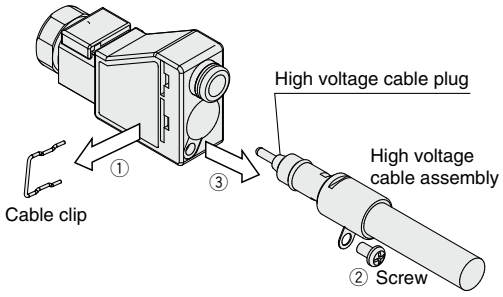

IZT40/41(-L)/42(-L)/43(-L) Series
Specific Product Precautions 6

Be sure to read this before handling the products. Refer to page 227 for safety instructions.

Handling

⚠ Caution

1. Do not apply excessive external force or impact (100 m/s² or more).
- Even though the controller, high voltage power supply module, bar, and nozzle do not appear to be damaged, the internal parts may be damaged and cause a malfunction.

2. If the bar length exceeds 820 mm, hold both ends and the middle of the bar to avoid a moment load being applied.
- Handling the product by holding either end of the bar may cause deformation or damage of the product.

3. The power cable must be connected and disconnected by hand.
- The use of tools can result in damage to the product.
- Hold the connector by hand and pull it out straight.
- If the connector has a lock mechanism, release the lock and then pull out the connector.

4. If smoking, fire, or foul smell occurs in the product, immediately shut OFF the power supply.

5. Do not touch part A of the high voltage connector and part B of the high voltage cable plug by hand. Be careful that moisture or foreign matter does not adhere to the connector and plug.
- Do not touch part A of the high voltage connector and part B of the high voltage cable plug while handling.
- Keep the high voltage connector and high voltage cable plug free from contamination. Adhesion of moisture, oil, or foreign matter on part A and part B may cause high voltage electric leakage.
- If moisture, oil, or foreign matter adheres to part A or part B, clean it with ethanol.

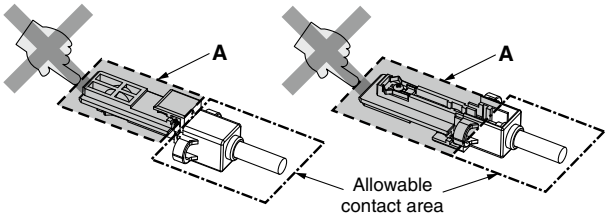

High voltage connector

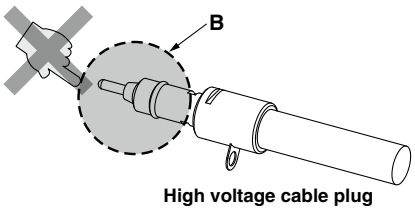

High voltage cable plug

Handling

⚠ Caution

6. Tightening of M12 connector screw
- The screws may become loose if they are not tightened sufficiently.
- Check that they are tightened enough at appropriate intervals during operation.

7. Connection and disconnection of M12 connector
- Do not touch the engagement surface with wet hands.
- Do not pull the cable out by holding the cable.
- Please be careful of the key direction.
- When engaging the connectors, insert the connectors until the entire engagement surface is no longer visible and tighten the screws so as not to damage the thread ridges.

Adjustment / Operation

⚠ Caution

1. For details on programming and address setting, refer to the manual from the PLC manufacturer. The programming content related to the protocol is designed by the manufacturer of the PLC used.