## Vessel Series

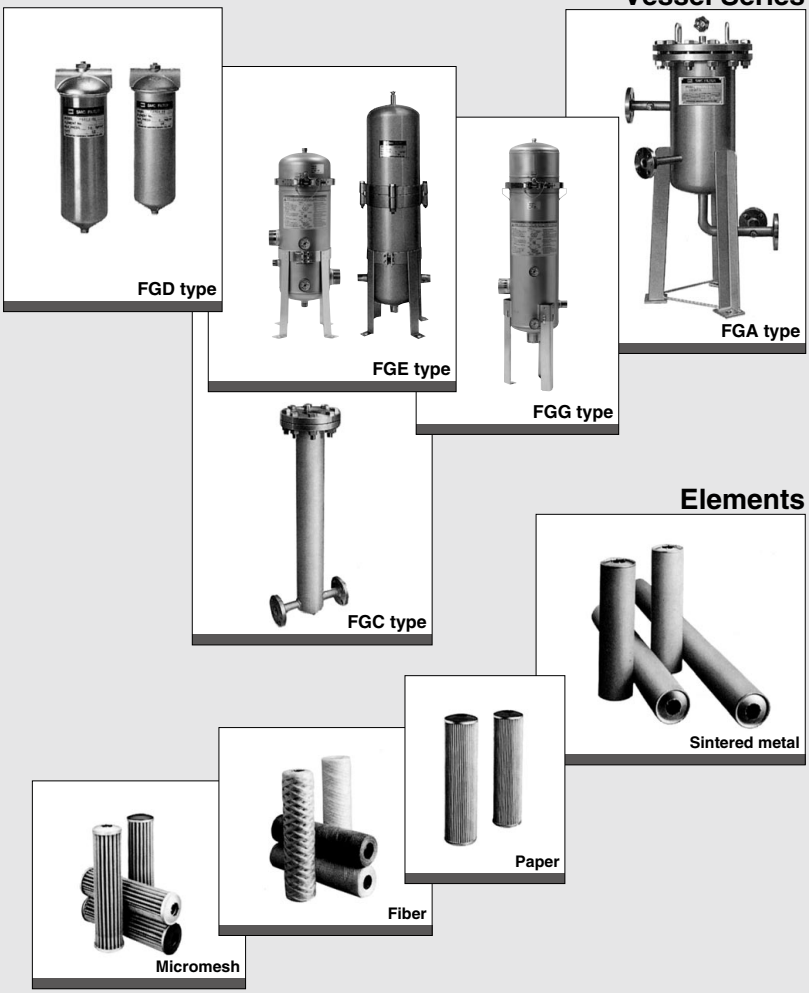

# SMC industrial filters are

SMC

Elements can be incorporated
Please use by setting an element

## Industrial Filters (FG□ Series)

| Series | Application/Specifications | Page |
|---|---|---|
| **FGD Series**<br>● Suitable for low flow rate, low pressure "filtration".<br>● Can be used with a wide range of fluids.<br>● Antistatic specifications (FGDE, FGDF)<br> | • **Application:** Low flow rate filtration (Max. 60 L/min)<br>• **Specifications:** Maximum operating pressure: 0.7, 1 MPa<br>Port size: Rc3/8, 1/2, 3/4<br>Body materials:<br>Cover: Aluminum, SCS14<br>Case: SPCD, Stainless steel 316 | P.24 |
| **FGE Series**<br>● Suitable for medium flow rate, low pressure "filtration".<br>● Element replacement is easy with the V-band type. (with cover anti-scattering mechanism)<br>● Can be used with a wide range of fluids.<br> | • **Application:** Medium flow rate filtration (Max. 230 L/min)<br>• **Specifications:** Maximum operating pressure: 0.7 MPa<br>Port size: R1, 2<br>Body material: Stainless steel 304 | P.29 |
| **FGG Series**<br>● Suitable for high flow rate, low pressure "filtration".<br>● Element replacement is easy with the V-band type. (with cover anti-scattering mechanism)<br> | • **Application:** High flow rate filtration (Max. 350 L/min)<br>• **Specifications:** Maximum operating pressure: 0.7 MPa<br>Port size: Rc2 (female)<br>Body material: Stainless steel 304 | P.32 |
| **FGA Series (Made to Order)**<br>● Various types of elements can be selected according to the "filtration conditions", and the unit can be used for a wide range of applications.<br>● This type has a vertical structure, so there is little loss of "filtrate".<br>● Maintenance and inspection—element replacement in particular is easy.<br>● When used for a gas, the product is handled as a class 2 pressure vessel compliant special order product. (Except for products with an internal capacity of less than 40 L)<br> | • **Application:** High flow rate filtration (Max. 3200 L/min)<br>• **Specifications:** Maximum operating pressure: 1 MPa<br>Port size: Flange JIS 10KFF<br>25 to 150 ($1^{B}$ to $6^{B}$)<br>Body materials: SS400,<br>Stainless steel 304<br>(wetted parts) | P.35 |
| **FGC Series (Made to Order)**<br>● Various types of elements can be selected according to the "filtration conditions", and the unit can be used for a wide range of applications.<br>● This type has a vertical structure, so there is little loss of "filtrate".<br>● Maintenance and inspection—element replacement in particular is easy.<br> | • **Application:** Low flow rate filtration (Max. 80 L/min)<br>Filtration of high-pressure fluid<br>• **Specifications:** Maximum operating pressure: 1, 2, 4 MPa<br>Port size: Flange JIS 10KFF (FGC1)<br>15 to 25 ($1/2^{B}$ to $1^{B}$)<br>JPI300$^{Lb}$RF (FGC2)<br>JPI600$^{Lb}$RF (FGC4)<br>Body materials: SS400,<br>Stainless steel 304<br>(wetted parts) | P.38 |

# active in all fields of industry.

## Filters

into any type of vessel for SMC filters.
suited to the application in the vessel.

### Elements

| Element | Series | Material | Nominal filtration accuracy (μm) | Main applications | Page |
|---|---|---|---|---|---|
| **Sintered metal** | **EB** | Bronze | 1, 2, 5, 10<br>20, 40, 70<br>100, 120 | All types of gases/liquids,<br>General solvents,<br>High-temperature fluids | P.41 |
| | **ES** | Stainless steel 316 | 1, 2, 5, 10<br>20, 40, 70<br>100, 120 | | |
| **Fiber (Honeycomb)** | **EH** | Cotton | 0.5, 1, 5, 10<br>20, 50, 75, 100 | General solvents,<br>General neutral fluids | P.41 |
| | **EHM** | Polypropylene | 0.5, 1, 5, 10<br>20, 50, 75, 100 | Plating fluids, General acids,<br>Alkali fluids, Industrial water,<br>Cooling water | |
| | **EHK** | Glass fiber | 1, 5, 10, 20 | General acids,<br>High-temperature fluids | |
| **Paper** 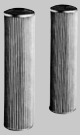 | **EP** | Cotton,<br>Phenol impregnated,<br>(Epoxy adhesion) | 5, 10, 20 | Hydraulic oil,<br>Lubricating oil,<br>Fuel oil | P.42 |
| **Micromesh** | **EM100** | Stainless steel 304<br>(Epoxy adhesion) | 5, 10, 20, 40<br>74, 105 | All types of gases/liquids,<br>High-temperature fluids | P.42 |
| | **EM500** | Stainless steel 316 | 5, 10, 20, 40<br>74, 105 | | |

# Filter Selection by Main Application
## FGD/FGE/FGG type

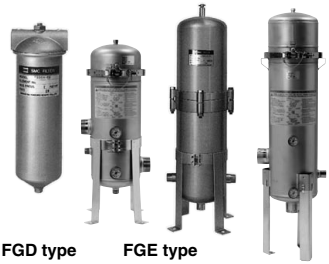

FGD type FGE type FGG type

### Applications and Applicable Element

●: Recommended ○: Can be used ×: Cannot be used

| Fluid name | Applicable element type, material | Nominal filtration accuracy (μm) | Applicable filter model | | | | | | | | |
|---|---|---|---|---|---|---|---|---|---|---|---|
| | | | FGDC | FGDE | FGDT | FGDF | FGES | FGEL | FGET | FGGS | FGGL |
| Industrial water | Fiber element Polypropylene | 10 | × | × | ● | ○ | ● | ○ | ○ | ● | ○ |
| Water for cleaning | Fiber element Polypropylene | 20 | × | × | ● | ○ | ● | ○ | ○ | ● | ○ |
| Water | Fiber element Polypropylene | 20 | × | × | ● | ○ | ● | ○ | ○ | ● | ○ |
| Fragrances | Fiber element Cotton | 10 | × | × | ● | ○ | ● | ○ | ○ | ● | ○ |
| Hot water | Micromesh element Stainless steel 316 | 10 | × | × | ● | ○ | ● | ○ | ○ | ● | ○ |
| General solvents | Micromesh element Stainless steel 316 | 40 | × | × | ○ | ● | × | × | ● | × | × |
| Grinding fluid (Grinding machines) | Fiber element Polypropylene | 10 | ○ | ● | ○ | ● | ● | ○ | ○ | ● | ○ |
| Grinding fluid (Oilstone) | Fiber element Polypropylene | 10 | ○ | ● | ○ | ● | ● | ○ | ○ | ● | ○ |
| Lubricating oil | Fiber element Polypropylene | 10 | ○ | ● | ○ | ● | ● | ○ | ○ | ● | ○ |
| Cooling water | Fiber element Polypropylene | 50 | × | × | ● | ○ | ● | ○ | ○ | ● | ○ |
| Cleaning water | Fiber element Polypropylene | 10 | × | × | ● | ○ | ● | ○ | ○ | ● | ○ |
| Developing fluid | Fiber element Polypropylene | 10 | × | × | ● | ○ | ● | ○ | ○ | ● | ○ |
| Lacquer | Fiber element Cotton | 50 | × | × | ○ | ● | × | × | ● | × | × |
| Nitrogen gas | Fiber element Cotton | 10 | ● | ○ | ● | ○ | × | × | ● | × | × |
| Carbon dioxide | Fiber element Cotton | 10 | ● | ○ | ● | ○ | × | × | ● | × | × |
| Air (Dry) | Fiber element Cotton | 0.5 to 10 | ● | ○ | ● | ○ | × | × | ● | × | × |

Note) Please refer to “How to Order” for each series when a filter vessel is combined with an element.

**●How to read the chart**

Example)
- Application: Scale removal in water for cleaning
- Treatment flow rate: 170 L/min
- Nominal filtration accuracy: Left up to the manufacturer
- Port size: 2

For the above specifications, first see “Applications and Applicable Element”. The applicable element for water for cleaning is polypropylene, with a nominal filtration accuracy of 20 μm, and the applicable filter model are all models except FGDC and DGDE.
Next, see "Applicable Filter and Treatment Flow Rate". Follow the item where the fluid name is water for cleaning to the bottom, and at the point where the specifications are 170 L/min or more, see the left. The filter models FGESA, FGELA and FGETA are the applicable filter models.

Therefore, the selected filter model and element are:

Filter model = FGESA-20
Element = Polypropylene 20 μm
(EHM15R10A)

## Applicable Filter and Treatment Flow Rate

*Indicates the flow rate (L/min) when the initial pressure drop (including vessel resistance) is 0.0015 MPa (for gas) or 0.015 MPa (for fluid).

| Fluid name / Applicable element / Nominal filtration accuracy (μm) / Applicable filter model | | Air (Dry) | | Industrial water | | | | Lubricating oil (20 mm²/s) | Fragrances (1 mm²/s) |
|---|---|---|---|---|---|---|---|---|---|
| | | Cotton | | Polypropylene | | | | Paper | Micromesh |
| | | 0.5 Note 1) | 10 Note 1) | 1 | 5 | 10 | 20 | 10 | 5 |
| FGDCA<br>FGDEA<br>FGDTA<br>FGDFA | 03 | 110 | 550 | 11 | 21 | 23 | 26 | 22 | 29 |
| | 04 | 110 | 750 | 12 | 27 | 30 | 36 | 28 | 42 |
| | 06 | 110 | 1000 | 13 | 32 | 36 | 46 | 32 | 57 |
| FGDCB<br>FGDEB<br>FGDTB<br>FGDFB | 03 | 200 | 600 | 17 | 25 | 26 | 28 | 26 | 30 |
| | 04 | 200 | 840 | 21 | 35 | 37 | 41 | 38 | 44 |
| | 06 | 210 | 1200 | 23 | 46 | 50 | 56 | 50 | 63 |
| FGESA Note 2)<br>FGELA Note 2)<br>FGETA | 10 | 410 | 3000 | 45 | 90 | 120 | 140 | 100 | 160 |
| | 20 | 410 | 3600 | 50 | 120 | 140 | 170 | 110 | 210 |
| FGESB Note 2)<br>FGELB Note 2)<br>FGETB | 10 | 800 | 3300 | 70 | 140 | 150 | 160 | 120 | 170 |
| | 20 | 800 | 4200 | 90 | 170 | 180 | 210 | 140 | 230 |
| FGESC Note 2)<br>FGELC Note 2)<br>FGETC | 10 | 1100 | 3400 | 83 | 150 | 160 | 170 | 120 | 170 |
| | 20 | 1200 | 4400 | 120 | 190 | 200 | 220 | 150 | 230 |
| FGGSB<br>FGGLB | | — | — | 160 | 270 | 300 | 320 | 290 | 360 |
| FGGSC<br>FGGLC | | — | — | 200 | 300 | 320 | 340 | 320 | 370 |
| FGGSD<br>FGGLD | | — | — | 230 | 320 | 330 | 350 | 330 | 370 |

Note 1) Indicates flow rate in L/min under atmospheric pressure (ANR) (at 0.5 MPa).
Note 2) Gases cannot be used.
Note 3) Please consult SMC for high flow rates other than the above.

# Industrial Filter
# *FGD* Series

## How to Order

**FGD C A – 03 – B 002 N ☐**

**Element length**

| Symbol | Element length |
|---|---|
| A | L250 |
| B | L500 (L250 x 2) |

**Port size**

| Symbol | Port size Rc |
|---|---|
| 03 | 3/8 |
| 04 | 1/2 |
| 06 | 3/4 |

**Accessory**

| Symbol | Accessory |
|---|---|
| Nil | None |
| -B | Bracket |

**Element category**

| Symbol | Element type | Material |
|---|---|---|
| B | Sintered metal | Bronze |
| S | | Stainless steel |
| T | Fiber (Honeycomb) | Polypropylene |
| G | | Glass fiber |
| H | | Cotton |
| P | Paper | Cotton |
| M | Micromesh | Stainless steel 304/Epoxy |
| L | | Stainless steel 316 |
| J | HEPO Ⅱ | Polyester/Polypropylene |

**Element seal material** Note)

| Symbol | Element seal material |
|---|---|
| A | Non-asbestos |
| T | Fluororesin |
| N | NBR |
| V | FKM |

Note) Refer to the below table for the element seal material types by the element category.

**Material** Note)

| Symbol | Cover | Case | Gasket/O-ring | Seal |
|---|---|---|---|---|
| C | Aluminum | SPCD | NBR | Nylon |
| E | Aluminum | SPCD | NBR | Nylon/Fluororesin (Antistatic specifications) |
| T | SCS14 | Stainless steel 316 | Fluororesin | Fluororesin |
| F | SCS14 | Stainless steel 316 | Fluororesin | Fluororesin (Antistatic specifications) |

Note) If there is a static charge, select a product with an antistatic specification.

**Element/Element Seal Material Combinations**

| Element material \ Element seal material | | Nil (Without seal) | Non-asbestos A | PTFE T | NBR N | FKM V |
|---|---|---|---|---|---|---|
| B | Bronze | | | ○ | ○ | ○ |
| S | Stainless steel | | ○ | ○ | ○ | ○ |
| T | Polypropylene | ○ | | | | |
| G | Glass fiber | ○ | | | | |
| H | Cotton (Fiber) | ○ | | | | |
| P | Cotton (Paper) | | | | ○ | ○ |
| M | Stainless steel 304/Epoxy | | | | ○ | ○ |
| L | Stainless steel 316 | | ○ | ○ | ○ | ○ |
| J | Polyester/PP | | | ○ | ○ | ○ |

**Nominal filtration accuracy (μm)** Note)

| Symbol | Nominal filtration accuracy (μm) |
|---|---|
| X50 | 0.5 |
| 001 | 1 |
| 002 | 2 |
| 005 | 5 |
| 010 | 10 |
| 020 | 20 |
| 040 | 40 |
| 050 | 50 |
| 070 | 70 |
| 074 | 74 |
| 075 | 75 |
| 100 | 100 |
| 105 | 105 |
| 120 | 120 |

Note) For a comparison with the nominal filtration accuracy according to the element category, refer to pages 41 and 42.

**FGDT, F**

**FGDC, E**

- **Suitable for low flow rate, low pressure "filtration."**
- **Can be used with a wide range of fluids.**
- **Antistatic specifications (FGDE, FGDF)**

Note 1) The industrial filter described in this catalog are products in which an element is incorporated into a vessel.
Note 2) To order only an element (replacement part), refer to "How to Order" on pages 41 and 42.
Note 3) When ordering only a vessel (replacement part), delete each symbol for "Element category", "Nominal filtration accuracy (μm)" and "Element seal material" from the above "How to Order."
Note 4) Please use industrial filters in combination with parts made by SMC (vessels, elements etc.)

## Specifications

| Model | | FGDCA | FGDCB | FGDEA | FGDEB | FGDTA | FGDTB | FGDFA | FGDFB |
|---|---|---|---|---|---|---|---|---|---|
| **Port size (Rc)** | | 3/8, 1/2, 3/4 | | | | | | | |
| **Max. operating pressure (MPa)** Note 1) | | 0.7 | | | | 1 | | | |
| **Operating temperature (°C)** | | 0 to 80 | | | | | | | |
| **Number of elements** | | 1 | 2 Note 2) | 1 | 2 Note 2) | 1 | 2 Note 2) | 1 | 2 Note 2) |
| **Element size** | | ø65 to 70 x L250 | ø65 to 70 x L500 (L250 x 2) | ø65 to 70 x L250 | ø65 to 70 x L500 (L250 x 2) | ø65 to 70 x L250 | ø65 to 70 x L500 (L250 x 2) | ø65 to 70 x L250 | ø65 to 70 x L500 (L250 x 2) |
| Note 3) **Main materials** | **Cover** | Aluminum | | | | SCS14 | | | |
| | **Case** | SPCE | | | | Stainless steel 316 | | | |
| | **Gasket/O-ring** | NBR | | | | Fluororesin | | | |
| | **Seal** | Nylon | | Nylon/Fluororesin | | Fluororesin | | | |
| **Weight (kg)** | | 1.3 | 2.2 | 1.3 | 2.2 | 2.3 | 3.8 | 2.3 | 3.8 |
| **Internal capacity (L)** | | 1.7 | 3.4 | 1.7 | 3.4 | 1.7 | 3.4 | 1.7 | 3.4 |

Note 1) For gases, 0.5 MPa.
Note 2) 1 element (ø65 x L500) in the case of a sintered metal element or paper element.
Note 3) The sealing performance of nylon and fluororesin seals may decrease over time. Periodically check the tightening torque specified in the operation manual.



## Replacement Parts and Seal List

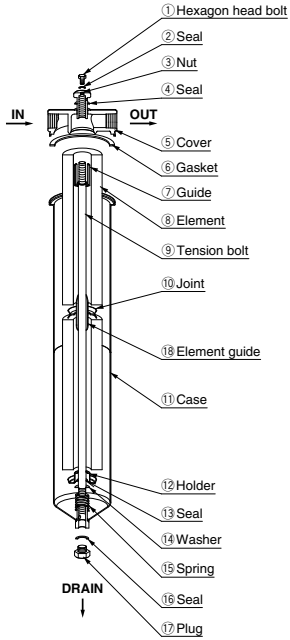


**Parts descriptions and functions**

(Figure shows the product with two FGD□B elements.)

Note) There is no compatibility between the FGDT/F and FGDC/E as the seal structure on the gasket portion is different. Use the cover and case of the same model.

### Parts Descriptions and Functions

| No. | Description | Material | Function |
|---|---|---|---|
| 1 | **Hexagon head bolt** | Stainless steel or iron | Plug to release air in the housing |
| 2 | **Seal** | Resin | |
| 3 | **Nut** | Stainless steel or iron | Tightens the cover. |
| 4 | **Seal** | Resin | |
| 5 | **Cover** | Stainless steel or Aluminum | The lid of the filter body |
| 6 | **Gasket** | Resin or rubber | |
| 7 | **Guide** | Stainless steel | Seals the gap between the element and tension bolt. |
| 8 | **Element** | Depends on the element type. | The mounted element collects residue. |
| 9 | **Tension bolt** | Stainless steel or iron | Connects the case and cover. |
| 10 | **Joint** | Stainless steel | Seals the area between elements. (when two FGD□B elements are used) |
| 11 | **Case** | Stainless steel or iron | Filter body |
| 12 | **Holder** | Stainless steel | Seals the elements. |
| 13 | **Seal** | Resin or rubber | |
| 14 | **Washer** | Stainless steel | |
| 15 | **Spring** | Stainless steel | Stabilizes the element. |
| 16 | **Seal** | Resin | |
| 17 | **Plug** | Stainless steel or iron | Drainage discharging plug |
| 18 | **Element guide** | Stainless steel or iron | |

### Replacement Parts

| Description | Part no. | Applicable model | Part no. (Kit contents) |
|---|---|---|---|
| **Nut kit** | **FGD-KT001** | FGDC | ①, ②, ③, ④: 1 pc. each |
| | **FGD-KT002** | FGDE | |
| | **FGD-KT003** | FGDT | |
| | **FGD-KT004** | FGDF | |
| **Replacement cover** | **FGD-CV005-03/04/06** | FGDT/F | ⑤ |
| | **FGD-CV006-03/04/06** | FGDC/E | |
| **Joint** | **FGD-OP001** | FGDI | ⑩ |
| **Seal kit** | **KT-FGDC** | FGDC | ②, ④, ⑥, ⑬, ⑯: 1 pc. each |
| | **KT-FGDE** | FGDE | |
| | **KT-FGDT** | FGDT | |
| | **KT-FGDF** | FGDF | |
| **Replacement case assembly** | **FGD-CA002** | FGDT/F(L250) | ⑦, ⑨, ⑪, ⑫, ⑬, ⑭, ⑮, ⑯, ⑰ : 1 pc. each<br>Note) Only the FGD-CA003 and CA005 includes ⑱ element guide in the set. |
| | **FGD-CA003** | FGDT/F(L500) | |
| | **FGD-CA004** | FGDC/E(L250) | |
| | **FGD-CA005** | FGDC/E(L500) | |

## Dimensions

### FGD□A (1 element)

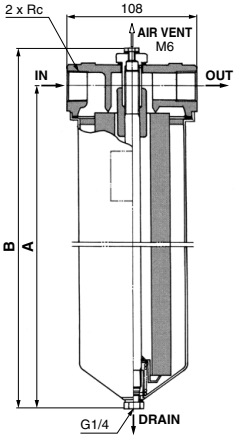


### FGD□B (2 elements)

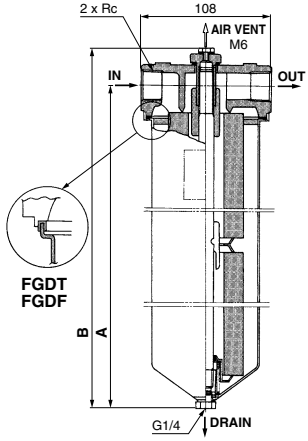


∗ Element removal dimension: 50 mm

(mm)

| Model | Element length | A | B | Port size Rc |
|---|---|---|---|---|
| FGDC<br>FGDE | A (L250) | 314 | 346 | 3/8, 1/2, 3/4 |
| | B (L500) | 574 | 606 | |
| FGDT<br>FGDF | A (L250) | 314 | 349 | |
| | B (L500) | 574 | 608 | |

## Accessory/Bracket

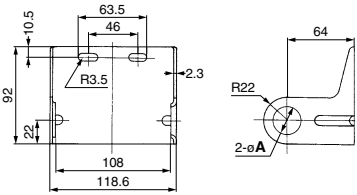


(mm)

| Part no. | øA | Port size Rc | Material | Surface treatment |
|---|---|---|---|---|
| BP-1S | 17.5 | 3/8 | SPCC | Zinc chromated |
| BP-2S | 22 | 1/2 | | |
| BP-3S | 27.5 | 3/4 | | |

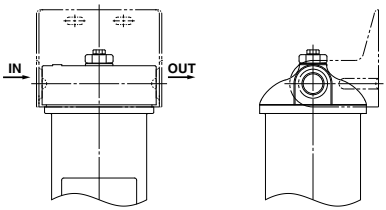


**Mounting position**

Note) Secure the filter with steel piping.
Use this bracket for piping support.
(Flexible piping cannot be used to secure the filter.)

# *FGD* Series
# Made to Order
**Consult with SMC for details.**

Made to Order

## 1 With Differential Pressure Indicator (X77), With Differential Pressure Indication Switch (X78)

Symbol **-X77, -X78**

The replacement period due to clogging of the element can be checked visually (X77), and a built-in contact enables the output of an electrical signal (X78).

## Applicable models

- **FGDC, FGDE**
- **FGDT, FGDF**

Note 1) A magnet is used on the wetted parts.
Note 2) For the FGDT and the FGDE, the material of the filter body and that of the O-ring differ.
Note 3) Be sure to check whether the fluid to be used is compatible with the product in advance.

## How to Order

**Standard model no.*** [ ]

● **Made to Order**

| Symbol | Description |
|---|---|
| **Nil** | None |
| **X77** | With differential pressure indicator |
| **X78** | With differential pressure idication switch |

* Refer to How to Order of the standard specifications for the applicable models

## Differential Pressure Indication

**■ Differential pressure indicator**
- Operation pressure—0.1±0.02 MPa
- Once a value is displayed, it will continue to be displayed until reset, even if the pump is stopped. (Reset type)
- Perform element replacement when the red ring floats up and covers the entire inspection window.

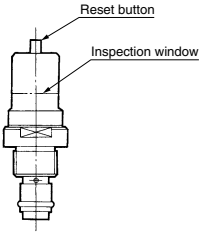


**■ Differential pressure indication switch**
- Operating pressure—0.1±0.02 MPa
- When a value has been displayed, it will be automatically reset when the pump is stopped. (Non-reset type)
- This is a visual dual-purpose. Perform element replacement when the switch has actuated (when the red ring floats up and covers the entire inspection window).
- N.C. and N.O. common

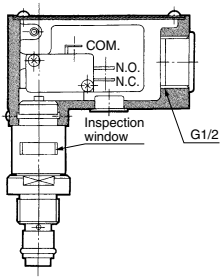


### Differential Pressure Indicator/Switch Part No.

| Applicable model | Part no. | |
|---|---|---|
| | Differential pressure indicator | Differential pressure indication switch |
| **FGDC, E** | CB-62H | CB-63H |
| **FGDT, F** | CB-60H | CB-61H |

### Microswitch Ratings

| Rated voltage (V) | Noninductive load (A) | | | | Inductive load (A) | | | |
|---|---|---|---|---|---|---|---|---|
| | Resistance load | | Light load | | Inductive load | | Motor load | |
| | Normally closed | Normally open | Normally closed | Normally open | Normally closed | Normally open | Normally closed | Normally open |
| **AC125** | 5 | | 1.5 | 0.7 | 4 | | 2.5 | 1.3 |
| **AC250** | 5 | | 1 | 0.5 | 4 | | 1.5 | 0.8 |
| **DC8** | 5 | | 3 | | 5 | 4 | 3 | |
| **DC14** | 5 | | 3 | | 4 | | 3 | |
| **DC30** | 5 | | 3 | | 4 | | 3 | |
| **DC125** | 0.4 | | 0.1 | | 0.4 | | 0.1 | |
| **DC250** | 0.3 | | 0.05 | | 0.3 | | 0.05 | |

**Precautions**
1. The figures in the above table indicate stationary current.
2. An inductive load has a power factor (AC) of 0.75 or more, and a time constant (DC) of 7 msec or less.
3. A light load has an inrush current 10 times greater.
4. Lead wires are connected using a soldering terminal.
5. The electrical entry is equipped with a conduit (G1/2) and grommet.
6. Please wire freely to the microswitch indication symbol 1(COM.), 2(N.C.) and 3(N.O.).
7. If a holding mechanism is necessary for the non-reset type, provide it using electric circuits.

## Specifications

| Model | | FGDCA/FGDEA (X77, X78) | FGDCB/FGDEB (X77, X78) | FGDTA/FGDFA (X77, X78) | FGDTB/FGDFB (X77, X78) |
|---|---|---|---|---|---|
| Max. operating pressure (MPa) | | 0.7 | | 1.0 | |
| Operating temperature (°C) | | 0 to 80 | | | |
| Differential pressure indicator operating pressure / Differential pressure indication switch operating pressure (MPa) | | 0.1±0.02 | | | |
| Port size | | Rc3/8, 1/2, 3/4 | | | |
| Differential pressure indicator/ Differential pressure indication switch Material | Body | Aluminum | | Stainless steel 303 | |
| | Seal | NBR | | FKM | |
| Weight (kg) | X77 | 1.3 | 2.2 | 2.3 | 3.8 |
| | X78 | 1.5 | 2.4 | 2.5 | 4.0 |
| Internal volume (L) | | 1.7 | 3.4 | 1.7 | 3.4 |

Note) Refer to "Specifications" on page 25 for details on the materials of the cover, case, etc.

## Dimensions

### With differential pressure indicator (X77)

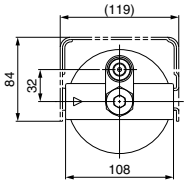


**Replacement Cover Assembly (X77)**
**One set each of cover and differential pressure indicator**

| Part no. | Applicable model |
|---|---|
| FGD-CV002-03/04/06 | FGDT/F |
| FGD-CV003-03/04/06 | FGDC/E |

Note 1) Same as standard product except for cover assembly
Note 2) 03, 04, and 06 indicate the relevant port sizes (Rc3/8, 1/2, 3/4).

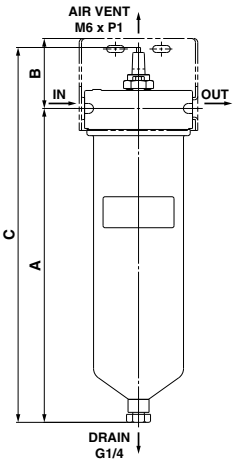


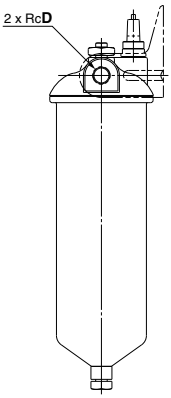


(mm)

| Model | Element length | A | B | C | D |
|---|---|---|---|---|---|
| FGDC FGDE | A (L250) | 314 | 70 | 374 | 3/8, 1/2, 3/4 |
| | B (L500) | 574 | 70 | 634 | |
| FGDT FGDF | A (L250) | 315 | 70 | 375 | |
| | B (L500) | 574 | 70 | 636 | |

### With differential pressure indication switch (X78)

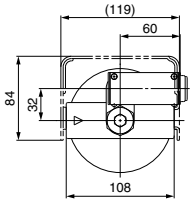


**Replacement Cover Assembly (X78)**
**One set each of cover and differential pressure indicator**

| Part no. | Applicable model |
|---|---|
| FGD-CV004-03/04/06 | FGDT/F |
| FGD-CV001-03/04/06 | FGDC/E |

Note 1) Same as standard product except for cover assembly
Note 2) 03, 04, and 06 indicate the relevant port sizes (Rc3/8, 1/2, 3/4).

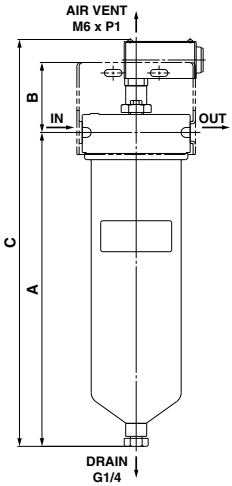


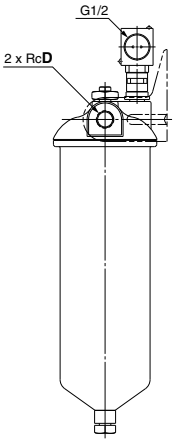


(mm)

| Model | Element length | A | B | C | D |
|---|---|---|---|---|---|
| FGDC FGDE | A (L250) | 314 | 70 | 407 | 3/8, 1/2, 3/4 |
| | B (L500) | 574 | 70 | 665 | |
| FGDT FGDF | A (L250) | 315 | 70 | 408 | |
| | B (L500) | 574 | 70 | 665 | |

# Industrial Filter
# *FGE* Series



## How to Order

**FGES/FGEL type (V-band type)**

**FGE S A – 10 – B 002 N A – G1**

**Material**

| Symbol | Body | Gasket/O-ring |
|---|---|---|
| S | Stainless steel 304 | NBR |
| L | | FKM |

**Option**

| Symbol | Pressure gauge type |
|---|---|
| G1 | G46-10-02M (Brass at wetted parts) |
| G2 | G46-10-02-SRB (Stainless steel at wetted parts) |
| Nil | None (with plug) |

∗ Please use the applicable pressure gauge depending on the fluid used.
Control the differential pressure even when none pressure gauge is selected.

**FGET type (Bolt tightening type)**

**FGE T A – 10 – B 002 N**

**Material**

| Symbol | Body | Gasket/O-ring |
|---|---|---|
| T | Stainless steel 304 | Fluororesin |

**Element length**

| Symbol | Element length |
|---|---|
| A | L250 |
| B | L500 (L250 x 2) |
| C | L750 (L250 x 3) |

**Port size**

| Symbol | Port size R |
|---|---|
| 10 | 1 |
| 20 | 2 |

**Element category**

| Symbol | Element type | Material |
|---|---|---|
| B | Sintered metal | Bronze |
| S | | Stainless steel |
| T | Fiber | Polypropylene |
| G | | Glass fiber |
| H | | Cotton |
| P | Paper | Cotton |
| M | Micromesh | Stainless steel 304/Epoxy |
| L | | Stainless steel 316 |
| J | HEPO Ⅱ | Polyester/Polypropylene |

**Element seal material** Note)

| Symbol | Element seal material |
|---|---|
| A | Non-asbestos |
| T | Fluororesin |
| N | NBR |
| V | FKM |

Note) Refer to the below table for the element seal material types by the element category.

**Nominal filtration accuracy (μm)** Note)

| Symbol | Nominal filtration accuracy (μm) | Symbol | Nominal filtration accuracy (μm) |
|---|---|---|---|
| X50 | 0.5 | 050 | 50 |
| 001 | 1 | 070 | 70 |
| 002 | 2 | 074 | 74 |
| 005 | 5 | 075 | 75 |
| 010 | 10 | 100 | 100 |
| 020 | 20 | 105 | 105 |
| 040 | 40 | 120 | 120 |

Note) For a comparison with the nominal filtration accuracy according to the element category, refer to pages 41 and 42.

**Element/Element Seal Material Combinations**

| Element material \ Element seal material | | Nil (Without seal) | Non-asbestos A | PTFE T | NBR N | FKM V |
|---|---|---|---|---|---|---|
| B | Bronze | | | ○ | ○ | ○ |
| S | Stainless steel | | ○ | ○ | ○ | ○ |
| T | Polypropylene | ○ | | | | |
| G | Glass fiber | ○ | | | | |
| H | Cotton (Fiber) | ○ | | | | |
| P | Cotton (Paper) | | | | ○ | ○ |
| M | Stainless steel 304/Epoxy | | | | ○ | ○ |
| L | Stainless steel 316 | | ○ | ○ | ○ | ○ |
| J | Polyester/PP | | | ○ | ○ | ○ |

**FGES/FGEL type**
**(V-band type)**

**FGET type**
**(Bolt tightening type)**

- **Suitable for medium flow rate, low pressure "filtration."**
- **Element replacement is easy with the V-band type. (with cover anti-scattering mechanism)**
- **Can be used with a wide range of fluids**

Note 1) The industrial filter described in this catalog are products in which an element is incorporated into a vessel.
Note 2) To order only an element (replacement part), refer to "How to Order" on pages 41 and 42.
Note 3) When ordering only a vessel (replacement part), delete each symbol for "Element category", "Nominal filtration accuracy (μm)" and "Element seal material" from the above model indication method.
Note 4) Please use industrial filters in combination with parts made by SMC (vessels, elements etc.)
Note 5) Do not use the V-band type for gases.

## Specifications

| Model | | FGESA[Note 1)] | FGESB[Note 1)] | | FGESC[Note 1)] | | FGELA[Note 1)] | FGELB[Note 1)] | | FGELC[Note 1)] | | FGETA | FGETB | | FGETC | |
|---|---|---|---|---|---|---|---|---|---|---|---|---|---|---|---|---|
| **Port size (R)** | | 1, 2 | | | | | | | | | | | | | | |
| **Max. operating pressure (MPa)** | | 0.7 | | | | | | | | | | | | | | |
| **Operating temperature (°C)** | | 0 to 80 (60 with pressure gauge) | | | | | | | | | | | | | | |
| **Number of elements** | | 4 | 4[Note 2)] | 8 | 4[Note 2)] | 12 | 4 | 4[Note 2)] | 8 | 4[Note 2)] | 12 | 4 | 4[Note 2)] | 8 | 4[Note 2)] | 12 |
| **Element size** | | ø65 to 70 x L250 | ø65 to 70 x L500 | ø65 to 70 x L250 | ø65 to 70 x L750 | ø65 to 70 x L250 | ø65 to 70 x L250 | ø65 to 70 x L500 | ø65 to 70 x L250 | ø65 to 70 x L750 | ø65 to 70 x L250 | ø65 x L250 | ø65 x L500 | ø65 x L250 | ø65 x L750 | ø65 x L250 |
| **Main materials** | **Cover** | Stainless steel 304 | | | | | | | | | | | | | | |
| | **Case** | Stainless steel 304 | | | | | | | | | | | | | | |
| | **Gasket** | — | — | | — | | — | — | | — | | Fluororesin | Fluororesin | | Fluororesin | |
| | **O-ring** | NBR | | | | | FKM | | | | | — | | | | |
| | **Legs** | SS400 (Chromatic plating) | | | | | | | | | | | | | | |
| **Weight (kg)** | | 10 | 13 | | 18 | | 10 | 13 | | 18 | | 12 | 15 | | 20 | |
| **Internal capacity (L)** | | 14 | 21 | | 29 | | 14 | 21 | | 29 | | 11.5 | 18.5 | | 26 | |

Note 1) Cannot be used with gases.
Note 2) In the case of a sintered metal element or paper element.

## Replacement Parts and Seal List

### FGES/FGEL type (V-band type)

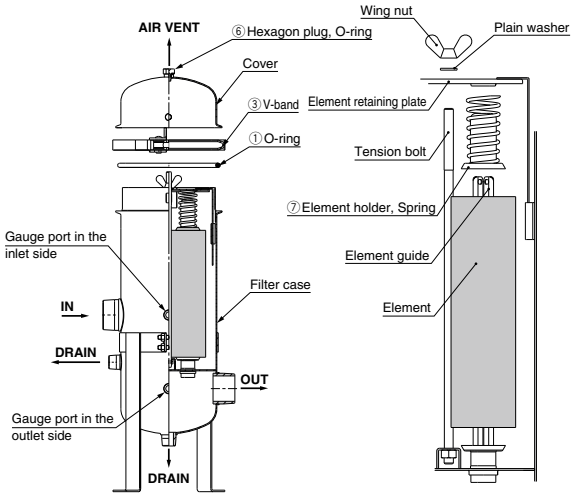


### FGET type (Bolt tightening type)

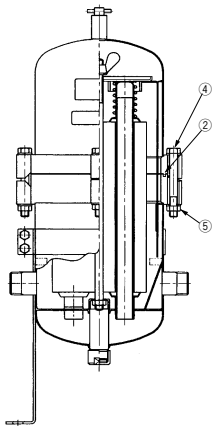


| No. | Description | Qty. | Applicable model | | |
|---|---|---|---|---|---|
| | | | **FGES** | **FGEL** | **FGET** |
| **1** | **O-ring** | 1 | FGE-KT001 | FGE-KT002 | — |
| **2** | **Gasket** | 1 | — | — | AL-19S |
| **3** | **V-band** | 1 | CY-24S | | — |
| **4** | **Hexagon head bolt** | 4 | — | — | CB00021 |
| **5** | **Hexagon nut** | 4 | — | — | DA00110 |
| **6** | **Hexagon plug** | 1 | FGE-OP007 | FGE-OP008 | — |
| | **O-ring** | 1 | | | |
| **7** | **Spring** | 4 | FGE-OP005 | | |
| | **Element holder** | 4 | | | |

## Dimensions

### FGES/FGEL type (V-band type)

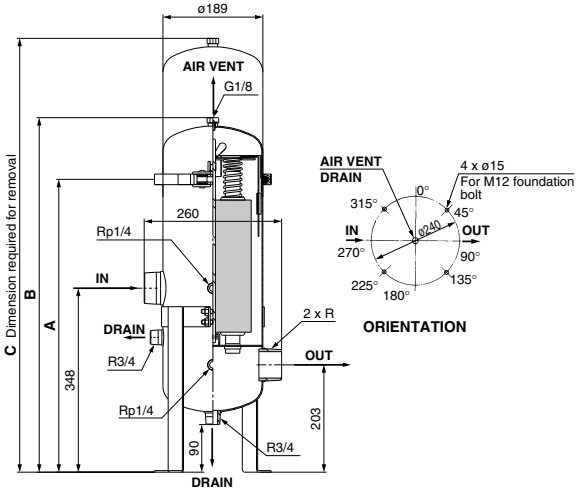


### FGET type (Bolt tightening type)

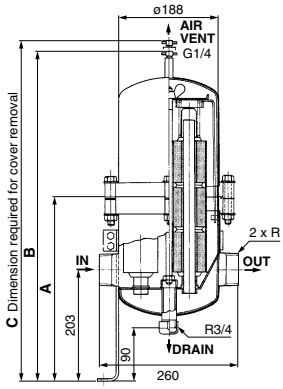


**FGES type (V-band type)** (mm)

| Model | A | B | C | Port size R |
|---|---|---|---|---|
| **FGESA** | 554 | 671 | 850 | 1, 2 |
| **FGESB** | | 931 | 1350 | |
| **FGESC** | | 1191 | 1860 | |

**FGEL type (V-band type)** (mm)

| Model | A | B | C | Port size R |
|---|---|---|---|---|
| **FGELA** | 554 | 671 | 850 | 1, 2 |
| **FGELB** | | 931 | 1325 | |
| **FGELC** | | 1191 | 1825 | |

**FGET type (Bolt tightening type)** (mm)

| Model | A | B | C | Port size R |
|---|---|---|---|---|
| **FGETA** | 366 | 612 | 910 | 1, 2 |
| **FGETB** | 516 | 871 | 1225 | |
| **FGETC** | 647 | 1133 | 1620 | |

# Industrial Filter
# *FGG Series*

## How to Order

**FGG S B – 20 – B 002 N A – G1**

**Material**

| Symbol | Body | O-ring |
|---|---|---|
| S | Stainless steel 304 | NBR |
| L | Stainless steel 304 | FKM |

**Element length**

| Symbol | Element length |
|---|---|
| B | L500 (L250 x 2) |
| C | L750 (L250 x 3) |
| D | L1000 (L250 x 4) |

**Port size**

| Symbol | Port size Rc |
|---|---|
| 20 | 2 |

**Element category**

| Symbol | Element type | Material |
|---|---|---|
| B | Sintered metal | Bronze |
| S | | Stainless steel |
| T | Fiber (Honeycomb) | Polypropylene |
| G | | Glass fiber |
| H | | Cotton |
| P | Paper | Cotton |
| M | Micromesh | Stainless steel 304/Epoxy |
| L | | Stainless steel 316 |

**Nominal filtration accuracy (μm)** Note)

| Symbol | Nominal filtration accuracy (μm) |
|---|---|
| X50 | 0.5 |
| 001 | 1 |
| 002 | 2 |
| 005 | 5 |
| 010 | 10 |
| 020 | 20 |
| 040 | 40 |
| 050 | 50 |
| 070 | 70 |
| 074 | 74 |
| 075 | 75 |
| 100 | 100 |
| 105 | 105 |
| 120 | 120 |

Note) For a comparison with the nominal filtration accuracy according to the element category, refer to pages 41 and 42.

**Option**

| Symbol | Pressure gauge type |
|---|---|
| G1 | G46-10-02M (Brass at wetted parts) |
| G2 | G46-10-02-SRB (Stainless steel at wetted parts) |
| Nil | None (with plug) |

∗ Please use the applicable pressure gauge depending on the fluid used.
Control the differential pressure even when none pressure gauge is selected.

**Element seal material** Note)

| Symbol | Element seal material |
|---|---|
| A | Non-asbestos |
| T | Fluororesin |
| N | NBR |
| V | FKM |

Note) Refer to the below table for the element seal material types by the element category.

**Element/Element Seal Material Combinations**

| Element material \ Element seal material | | Nil (Without seal) | Non-asbestos A | PTFE T | NBR N | FKM V |
|---|---|---|---|---|---|---|
| B | Bronze | | | ○ | ○ | ○ |
| S | Stainless steel | | ○ | ○ | ○ | ○ |
| T | Polypropylene | ○ | | | | |
| G | Glass fiber | ○ | | | | |
| H | Cotton (Fiber) | ○ | | | | |
| P | Cotton (Paper) | | | | ○ | ○ |
| M | Stainless steel 304/Epoxy | | | | ○ | ○ |
| L | Stainless steel 316 | | ○ | ○ | ○ | ○ |

- **Suitable for high flow rate, low pressure "filtration."**
- **Element replacement is easy with the V-band type. (with cover anti-scattering mechanism)**

Note 1) The industrial filter described in this catalog are products in which an element is incorporated into a vessel.
Note 2) To order only an element (replacement part), refer to "How to Order" on pages 41 and 42.
Note 3) When ordering only a vessel (replacement part), delete each symbol for "Element category", "Nominal filtration accuracy (μm)" and "Element seal material" from the above "How to Order".
Note 4) Please use industrial filters in combination with parts made by SMC (vessels, elements etc.)
Note 5) Do not use this filter for gases.

## Specifications

| Model | | FGGSB Note 1) | | FGGSC Note 1) | | FGGSD Note 1) | | FGGLB Note 1) | | FGGLC Note 1) | | FGGLD Note 1) | |
|---|---|---|---|---|---|---|---|---|---|---|---|---|---|
| **Port size (Rc)** | | 2 | | | | | | | | | | | |
| **Max. operating pressure (MPa)** | | 0.7 | | | | | | | | | | | |
| **Operating temperature (°C)** | | 0 to 80 (60 with pressure gauge) | | | | | | | | | | | |
| **Number of elements** | | 7 Note 2) | 14 | 7 Note 2) | 21 | 7 Note 2) | 28 | 7 Note 2) | 14 | 7 Note 2) | 21 | 7 Note 2) | 28 |
| **Element size** | | ø65 x L500 | ø65 x L250 | ø65 x L750 | ø65 x L250 | ø65 x L1000 | ø65 x L250 | ø65 x L500 | ø65 x L250 | ø65 x L750 | ø65 x L250 | ø65 x L1000 | ø65 x L250 |
| **Main materials** | **Cover** | Stainless steel 304 | | | | | | | | | | | |
| | **Case** | Stainless steel 304 | | | | | | | | | | | |
| | **O-ring** | NBR | | | | | | FKM | | | | | |
| | **Legs** | SS400 (Chromatic plating) | | | | | | | | | | | |
| **Weight (kg)** | | 19.5 | | 23 | | 30 | | 19.5 | | 23 | | 30 | |
| **Internal volume (L)** | | 27 | | 43 | | 52 | | 27 | | 43 | | 52 | |

Note 1) Cannot be used with gases.
Note 2) In the case of a sintered metal element or paper element.

## Replacement Parts and Seal List

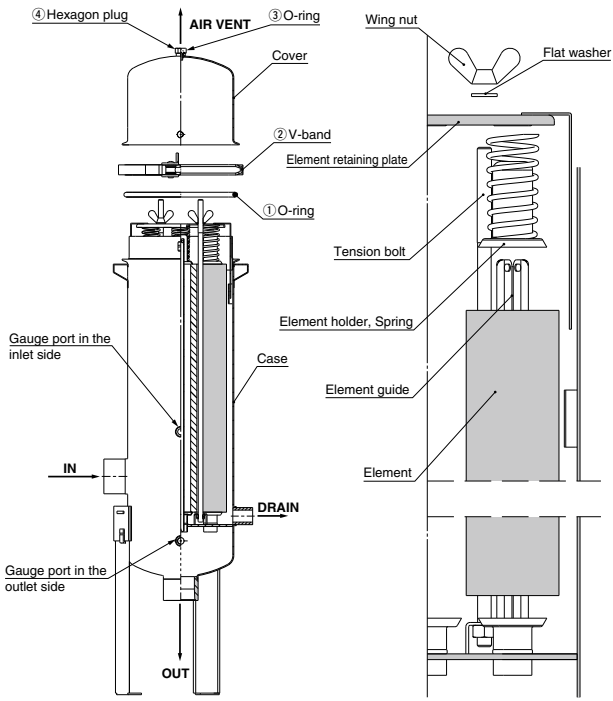


| No. | Description | Qty. | Applicable model | |
|---|---|---|---|---|
| | | | **FGGS** | **FGGL** |
| **1** | **O-ring** | 1 | FGF-KT01 | FGF-KT02 |
| **2** | **V-band** | 1 | CY-27S | |
| **3** | **O-ring** | 1 | FGE-OP007 | FGE-OP008 |
| **4** | **Hexagon plug** | 1 | | |

## Dimensions

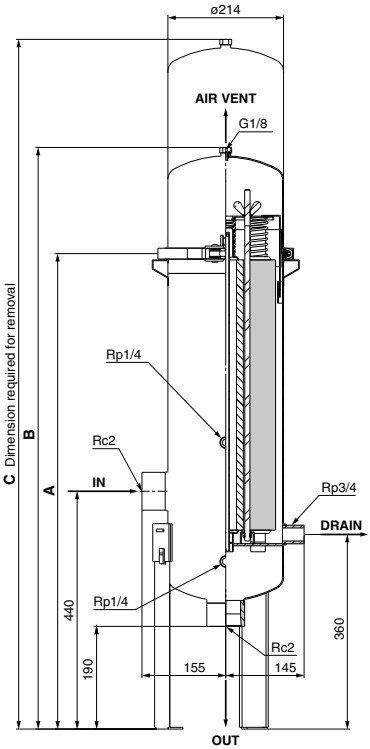


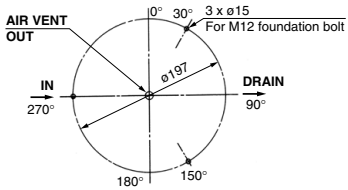


**ORIENTATION**

(mm)

| Model | A | B | C* |
|---|---|---|---|
| **FGGSB**<br>**FGGLB** | 880 | 1077 | 1180 to 1415 |
| **FGGSC**<br>**FGGLC** | 1147 | 1344 | 1440 to 1930 |
| **FGGSD**<br>**FGGLD** | 1417 | 1614 | 1710 to 2450 |

* The "C" dimension varies depending on the length of the incorporated element.

# Industrial Filter
# *FGA Series*
## (Produced upon receipt of order)



## How to Order

**FGA C 04 A – 10 – B 002 N**

### Wetted parts material (Vessel)

| Symbol | Wetted parts material |
|---|---|
| C | SS400 |
| S | Stainless steel 304 |

### Number of arranged elements

| Symbol | Number of arranged elements |
|---|---|
| 04 | 4 |
| 07 | 7 |
| 09 | 9 |
| 18 | 18 |
| 22 | 22 |
| 29 | 29 |
| 34 | 34 |
| 37 | 37 |

### Element length

| Symbol | Element length |
|---|---|
| A | L250 |
| B | L500 (L250 x 2) |
| C | L750 (L250 x 3) |
| D | L1000 (L250 x 4) |

### Port size

| Symbol | Port size |
|---|---|
| 10 | 25 (1B) |
| 14 | 40 (1 1/2B) |
| 20 | 50 (2B) |
| 24 | 65 (2 1/2B) |
| 30 | 80 (3B) |
| 40 | 100 (4B) |
| 60 | 150 (6B) |

Note) The connection method is JIS 10KFF flange connection.

### Element category

| Symbol | Element type | Material |
|---|---|---|
| B | Sintered metal | Bronze |
| S | | Stainless steel |
| T | Fiber | Polypropylene |
| G | | Glass fiber |
| H | | Cotton |
| P | Paper | Cotton |
| M | Micromesh | Stainless steel 304/Epoxy |
| L | | Stainless steel 316 |

### Element seal material Note)

| Symbol | Element seal material |
|---|---|
| A | Non-asbestos |
| T | Fluororesin |
| N | NBR |
| V | FKM |

Note) Refer to the below table for the element seal material types by the element category.

### Nominal filtration accuracy (μm) Note)

| Symbol | Nominal filtration accuracy (μm) |
|---|---|
| X50 | 0.5 |
| 001 | 1 |
| 002 | 2 |
| 005 | 5 |
| 010 | 10 |
| 020 | 20 |
| 040 | 40 |
| 050 | 50 |
| 070 | 70 |
| 074 | 74 |
| 075 | 75 |
| 100 | 100 |
| 105 | 105 |
| 120 | 120 |

Note) For a comparison with the nominal filtration accuracy according to the element category, refer to pages 41 and 42.

### Element/Element Seal Material Combinations

| Element material \ Element seal material | | Nil (Without seal) | Non-asbestos A | PTFE T | NBR N | FKM V |
|---|---|---|---|---|---|---|
| B | Bronze | | | ○ | ○ | ○ |
| S | Stainless steel | | ○ | ○ | ○ | ○ |
| T | Polypropylene | ○ | | | | |
| G | Glass fiber | ○ | | | | |
| H | Cotton (Fiber) | ○ | | | | |
| P | Cotton (Paper) | | | | ○ | ○ |
| M | Stainless steel 304/Epoxy | | | | ○ | ○ |
| L | Stainless steel 316 | | ○ | ○ | ○ | ○ |

- **Various types of elements can be selected according to the "filtration conditions," and the unit can be used for a wide range of applications.**
- **This type has a vertical structure, so there is little loss of "filtrate."**
- **Maintenance — element replacement in particular is easy.**
- **When used for a gas, the product is handled as a class 2 pressure vessel compliant special order product. (Except for products with an internal capacity of less than 40 L)** Note 7)
- **Confirm the lead time with each order.**

Note 1) (Necessary number of elements) = (Number of arranged elements) x $\frac{\text{(Element length)}}{\text{(Length per element)}}$

Calculation example) If the number of arranged elements is 7, the element length is L500, and length per element is L250, then:

(Necessary number of elements) = 7 x $\frac{500}{250}$ = 14

Note 2) The industrial filter/vessel series described in this catalog are products in which an element is incorporated into a vessel.

Note 3) To order only an element (replacement part), refer to "How to Order" on pages 41 and 42.

Note 4) When ordering only a vessel (replacement part), delete each symbol for "Element category", "Nominal filtration accuracy (μm)" and "Element seal material" from the above "How to Order".

Note 5) Please use industrial filters in combination with parts made by SMC (vessels, elements etc.)

Note 6) For the "FGAS" model, carbon steel is used and coated with silver in locations except for wetted parts material.

Note 7) For details about the internal capacity, refer to the dimensions on page 37.

## Specifications

### Standard Specifications

| Model | FGA |
|---|---|
| **Max. operating pressure (MPa)** | 1 |
| **Operating temperature (°C)** | 0 to 80 |
| **Port size** | 25 to 150 (1B to 6B) Note) |
| **Wetted parts material (Vessel)** | SS400/Stainless steel 304 |
| **Gasket** | Non-asbestos |

Note) JIS 10KFF is used for this flange.

### Applicable Element Specifications

| Description | Material | Nominal filtration accuracy (μm) | Size |
|---|---|---|---|
| **Sintered metal** | Bronze | 1, 2, 5, 10, 20, 40<br>70, 100, 120 | ø65 x L250<br>ø65 x L500<br>ø65 x L750<br>ø65 x L1000 |
| | Stainless steel 316 | | |
| **Paper** | Cotton (Phenol) | 5, 10, 20 | ø65 x L250<br>ø65 x L500<br>ø65 x L750<br>ø65 x L1000 |
| **Fiber** | Cotton | 0.5, 1, 5, 10, 20<br>50, 75, 100 | ø65 x L250 |
| | Polypropylene | | |
| | Glass fiber | 1, 5, 10, 20 | |
| **Micromesh** | Stainless steel 304 | 5, 10, 20, 40<br>74, 105 | ø65 x L250 |
| | Stainless steel 316 | | |

## Construction

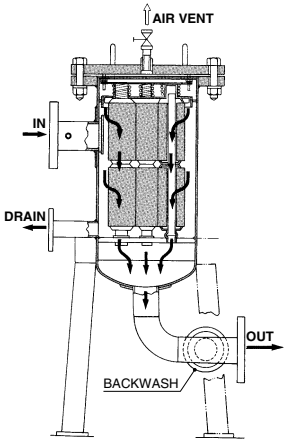

**Element mounting figure**

## Dimensions

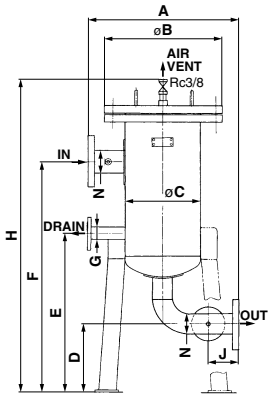


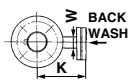


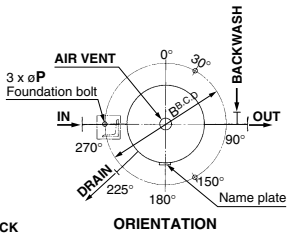


### Standard Models

(mm)

| Model | Number of arranged elements | Element length (L) | N (Port size) | | | G | W | A | øB | øC | D | E | F | H | J | K | øP | Weight (kg) | Internal volume (L) |
|---|---|---|---|---|---|---|---|---|---|---|---|---|---|---|---|---|---|---|---|
| FGAC<br>FGAS | 4 | 250 | 25 (1B) | 40 (1 1/2B) | 50 (2B) | 20 (3/4B) | 20 (3/4B) | 500 | 330 | 216.3 | 230 | 490 | 660 | 965 | 80 | 120 | 20 | 70 | 15 |
| | 4 | 500 | 25 (1B) | 40 (1 1/2B) | 50 (2B) | 20 (3/4B) | 20 (3/4B) | 500 | 330 | 216.3 | 230 | 490 | 905 | 1220 | 80 | 120 | 20 | 80 | 24 |
| | 4 | 750 | 25 (1B) | 40 (1 1/2B) | 50 (2B) | 20 (3/4B) | 20 (3/4B) | 500 | 330 | 216.3 | 230 | 490 | 1160 | 1485 | 80 | 120 | 20 | 90 | 32 |
| | 4 | 1000 | 25 (1B) | 40 (1 1/2B) | 50 (2B) | 20 (3/4B) | 20 (3/4B) | 500 | 330 | 216.3 | 230 | 490 | 1415 | 1750 | 80 | 120 | 20 | 105 | 41 |
| | 7 | 500 | 25 (1B) | 40 (1 1/2B) | 50 (2B) | 25 (1B) | 20 (3/4B) | 570 | 400 | 267.4 | 230 | 510 | 915 | 1250 | 100 | 150 | 20 | 115 | 37 |
| | 7 | 750 | 25 (1B) | 40 (1 1/2B) | 50 (2B) | 25 (1B) | 20 (3/4B) | 570 | 400 | 267.4 | 230 | 510 | 1175 | 1510 | 100 | 150 | 20 | 130 | 50 |
| | 7 | 1000 | 25 (1B) | 40 (1 1/2B) | 50 (2B) | 25 (1B) | 20 (3/4B) | 570 | 400 | 267.4 | 230 | 510 | 1440 | 1775 | 100 | 150 | 20 | 150 | 64 |
| | 9 | 500 | 40 (1 1/2B) | 50 (2B) | 65 (2 1/2B) | 40 (1 1/2B) | 25 (1B) | 620 | 445 | 318.5 | 240 | 560 | 935 | 1290 | 100 | 150 | 20 | 150 | 54 |
| | 9 | 750 | 40 (1 1/2B) | 50 (2B) | 65 (2 1/2B) | 40 (1 1/2B) | 25 (1B) | 620 | 445 | 318.5 | 240 | 560 | 1195 | 1550 | 100 | 150 | 20 | 175 | 73 |
| | 9 | 1000 | 40 (1 1/2B) | 50 (2B) | 65 (2 1/2B) | 40 (1 1/2B) | 25 (1B) | 620 | 445 | 318.5 | 240 | 560 | 1460 | 1815 | 100 | 150 | 20 | 200 | 92 |
| | 18 | 500 | 65 (2 1/2B) | 80 (3B) | 100 (4B) | 40 (1 1/2B) | 40 (1 1/2B) | 720 | 560 | 400 | 270 | 710 | 1045 | 1445 | 100 | 150 | 24 | 260 | 103 |
| | 18 | 750 | 65 (2 1/2B) | 80 (3B) | 100 (4B) | 40 (1 1/2B) | 40 (1 1/2B) | 720 | 560 | 400 | 270 | 710 | 1305 | 1705 | 100 | 150 | 24 | 295 | 137 |
| | 18 | 1000 | 65 (2 1/2B) | 80 (3B) | 100 (4B) | 40 (1 1/2B) | 40 (1 1/2B) | 720 | 560 | 400 | 270 | 710 | 1570 | 1970 | 100 | 150 | 24 | 340 | 171 |
| | 22 | 500 | 65 (2 1/2B) | 80 (3B) | 100 (4B) | 40 (1 1/2B) | 40 (1 1/2B) | 760 | 620 | 450 | 270 | 720 | 1055 | 1455 | 100 | 150 | 24 | 330 | 131 |
| | 22 | 750 | 65 (2 1/2B) | 80 (3B) | 100 (4B) | 40 (1 1/2B) | 40 (1 1/2B) | 760 | 620 | 450 | 270 | 720 | 1315 | 1715 | 100 | 150 | 24 | 380 | 173 |
| | 22 | 1000 | 65 (2 1/2B) | 80 (3B) | 100 (4B) | 40 (1 1/2B) | 40 (1 1/2B) | 760 | 620 | 450 | 270 | 720 | 1580 | 1980 | 100 | 150 | 24 | 430 | 217 |
| | 29 | 500 | 80 (3B) | 100 (4B) | 150 (6B) | 65 (2 1/2B) | 65 (2 1/2B) | 820 | 675 | 500 | 300 | 850 | 1120 | 1575 | 120 | 250 | 24 | 375 | 163 |
| | 29 | 750 | 80 (3B) | 100 (4B) | 150 (6B) | 65 (2 1/2B) | 65 (2 1/2B) | 820 | 675 | 500 | 300 | 850 | 1380 | 1835 | 120 | 250 | 24 | 435 | 216 |
| | 29 | 1000 | 80 (3B) | 100 (4B) | 150 (6B) | 65 (2 1/2B) | 65 (2 1/2B) | 820 | 675 | 500 | 300 | 850 | 1640 | 2095 | 120 | 250 | 24 | 495 | 269 |
| | 34 | 750 | 80 (3B) | 100 (4B) | 150 (6B) | 65 (2 1/2B) | 65 (2 1/2B) | 870 | 745 | 550 | 300 | 860 | 1390 | 1845 | 120 | 250 | 24 | 560 | 262 |
| | 34 | 1000 | 80 (3B) | 100 (4B) | 150 (6B) | 65 (2 1/2B) | 65 (2 1/2B) | 870 | 745 | 550 | 300 | 860 | 1650 | 2105 | 120 | 250 | 24 | 635 | 326 |
| | 37 | 750 | 80 (3B) | 100 (4B) | 150 (6B) | 65 (2 1/2B) | 65 (2 1/2B) | 920 | 795 | 600 | 300 | 880 | 1410 | 1865 | 120 | 250 | 24 | 630 | 317 |
| | 37 | 1000 | 80 (3B) | 100 (4B) | 150 (6B) | 65 (2 1/2B) | 65 (2 1/2B) | 970 | 795 | 600 | 300 | 880 | 1670 | 2125 | 120 | 250 | 24 | 710 | 394 |

Note) For the filter body diameter (øC), values of ø400 or higher indicate the inner diameter.

# Industrial Filter
# *FGC Series*
## (Produced upon receipt of order)

## How to Order

**FGC 1 C A – 04 – B 002 N**

**Maximum operating pressure**

| Symbol | Maximum operating pressure |
|---|---|
| 1 | 1 MPa |
| 2 | 2 MPa |
| 4 | 4 MPa |

**Wetted parts material (Vessel)**

| Symbol | Wetted parts material |
|---|---|
| C | SGP |
| S | Stainless steel 304 |

**Element length**

| Symbol | Element length |
|---|---|
| A | L250 |
| B | L500 (L250 x 2) |

**Port size**

| Symbol | Port size |
|---|---|
| 04 | 15 (1/2B) |
| 06 | 20 (3/4B) |
| 10 | 25 (1B) |

Note) The connection method is flange connection, as indicated below.
FGC1: JIS 10KFF flange connection
FGC2: JPI300LbRF flange connection
FGC4: JPI600LbRF flange connection

**Element category**

| Symbol | Element type | Material |
|---|---|---|
| B | Sintered metal | Bronze |
| S | | Stainless steel |
| T | Fiber | Polypropylene |
| G | | Glass fiber |
| H | | Cotton |
| P | Paper | Cotton |
| M | Micromesh | Stainless steel 316/Epoxy |
| L | | Stainless steel 316 |

**Element seal material** Note)

| Symbol | Element seal material |
|---|---|
| A | Non-asbestos |
| T | Fluororesin |
| N | NBR |
| V | FKM |

Note) Refer to the below table for the element seal material types by the element category.

**Nominal filtration accuracy (μm)** Note)

| Symbol | Nominal filtration accuracy (μm) |
|---|---|
| X50 | 0.5 |
| 001 | 1 |
| 002 | 2 |
| 005 | 5 |
| 010 | 10 |
| 020 | 20 |
| 040 | 40 |
| 050 | 50 |
| 070 | 70 |
| 074 | 74 |
| 075 | 75 |
| 100 | 100 |
| 105 | 105 |
| 120 | 120 |

Note) For a comparison with the nominal filtration accuracy according to the element category, refer to pages 41 and 42.

**Element/Element Seal Material Combinations**

| Element material \ Element seal material | | Nil (Without seal) | Non-asbestos A | PTFE T | NBR N | FKM V |
|---|---|---|---|---|---|---|
| B | Bronze | | | ○ | ○ | ○ |
| S | Stainless steel | | ○ | ○ | ○ | ○ |
| T | Polypropylene | ○ | | | | |
| G | Glass fiber | ○ | | | | |
| H | Cotton (Fiber) | ○ | | | | |
| P | Cotton (Paper) | | | | ○ | ○ |
| M | Stainless steel 304/Epoxy | | | | ○ | ○ |
| L | Stainless steel 316 | | ○ | ○ | ○ | ○ |

- **Various types of elements can be selected according to the "filtration conditions," and the unit can be used for a wide range of applications.**
- **This type has a vertical structure, so there is little loss of "filtrate."**
- **Maintenance — element replacement in particular is easy.**
- **This product is not certified by Japan's High Pressure Gas Safety Act.**
- **Confirm the lead time with each order.**

Note 1) The industrial filter/vessel series described in this catalog are products in which an element is incorporated into a vessel.
Note 2) To order only an element (replacement part), refer to "How to Order" on pages 41 and 42.
Note 3) When ordering only a vessel (replacement part), delete each symbol for "Element category", "Nominal filtration accuracy (μm)" and "Element seal material" from the above "How to Order".
Note 4) Please use industrial filters in combination with parts made by SMC (vessels, elements etc.)
Note 5) For the "FGCS" model, carbon steel is used and plated or coated with silver in locations except for wetted parts material.

## Specifications

### Standard Specifications

| Model | FGC |
|---|---|
| **Max. operating pressure (MPa)** | 1, 2, 4 |
| **Max. operating temperature (°C)** | 80 |
| **Port size** | 15 (1/2B), 20 (3/4B), 25 (1B) Note) |
| **Wetted parts material (Vessel)** | SGP/Stainless steel 304 |
| **Gasket** | Non-asbestos |

Note 1) JIS10KFF (FGC1), JPI300LbRF (FGC2) and JPI600LbRF (FGC4) are used for this flange.
Note 2) The FGC1 can only be used with gas.

### Applicable Element Specifications

| Description | Material | Nominal filtration accuracy (μm) | Size |
|---|---|---|---|
| **Sintered metal** | Bronze | 1, 2, 5, 10, 20, 40<br>70, 100, 120 | ø65 x L250<br>ø65 x L500 |
| | Stainless steel 316 | | |
| **Paper** | Cotton (Phenol) | 5, 10, 20 | ø65 x L250<br>ø65 x L500 |
| **Fiber** | Cotton | 0.5, 1, 5, 10, 20<br>50, 75, 100 | ø65 x L250 |
| | Polypropylene | | |
| | Glass fiber | 1, 5, 10, 20 | |
| **Micromesh** | Stainless steel 304 | 5, 10, 20, 40<br>74, 105 | ø65 x L250 |
| | Stainless steel 316 | | |

## Construction

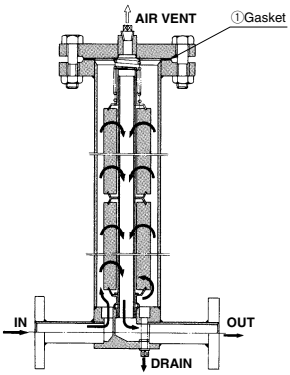


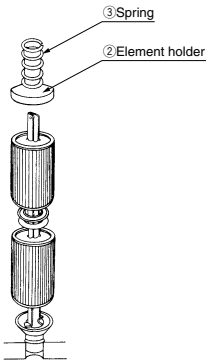


**Element mounting figure**

### Replacement Parts

| No. | Description | Qty. | Applicable model | | | |
|---|---|---|---|---|---|---|
| 1 | **Gasket** | 1 | FGC1□ | FGC2□ | FGC4C | FGC4S |
| | | | FGC-KT007 | FGC-KT008 | FGC-KT003 | FGC-KT004 |
| 2 | **Element holder** | 1 | FGC-OP001 | | | |
| 3 | **Spring** | 1 | | | | |

## Dimensions

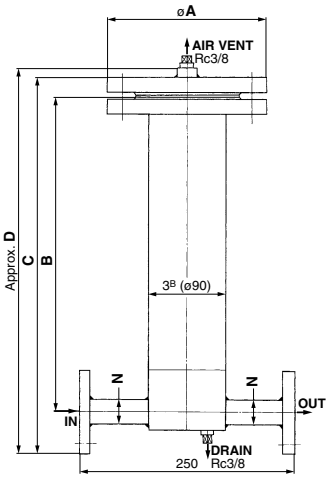


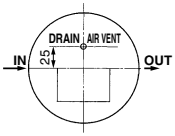


**ORIENTATION**

### Standard Models

(mm)

| Model | Maximum operating pressure | Element length (L) | N (Port size) | øA | B | C | D | IN/OUT Flange standard | Weight (kg) | Internal volume (L) |
|---|---|---|---|---|---|---|---|---|---|---|
| FGC1 | 1 MPa | 250 | 15 (1/2B) | 185 | 380 | 447 | 467 | JIS 10KFF | 15 | 2 |
| | | | 20 (3/4B) | 185 | 380 | 450 | 470 | | 15 | |
| | | | 25 (1B) | 185 | 385 | 467 | 487 | | 15 | |
| | | 500 | 15 (1/2B) | 185 | 645 | 712 | 732 | | 19 | 3 |
| | | | 20 (3/4B) | 185 | 645 | 715 | 735 | | 19 | |
| | | | 25 (1B) | 185 | 650 | 732 | 752 | | 19 | |
| FGC2 | 2 MPa | 250 | 15 (1/2B) | 210 | 380 | 458 | 479 | JPI 300LbSO,RF | 23 | 2 |
| | | | 20 (3/4B) | 210 | 380 | 474 | 490 | | 23 | |
| | | | 25 (1B) | 210 | 385 | 477 | 499 | | 23 | |
| | | 500 | 15 (1/2B) | 210 | 645 | 723 | 744 | | 27 | 3 |
| | | | 20 (3/4B) | 210 | 645 | 734 | 755 | | 27 | |
| | | | 25 (1B) | 210 | 650 | 742 | 764 | | 27 | |
| FGC4 | 4 MPa | 250 | 15 (1/2B) | 210 | 375 | 465 | 488 | JPI 600LbSO,RF | 26 | 2 |
| | | | 20 (3/4B) | 210 | 375 | 476 | 499 | | 26 | |
| | | | 25 (1B) | 210 | 380 | 485 | 507 | | 26 | |
| | | 500 | 15 (1/2B) | 210 | 640 | 730 | 753 | | 30 | 3 |
| | | | 20 (3/4B) | 210 | 640 | 741 | 764 | | 30 | |
| | | | 25 (1B) | 210 | 645 | 750 | 772 | | 30 | |

# Elements
## Sintered Metal/Fiber

Nonstandard elements of the FQ1 series can also be used commonly.
(For details, refer to Nonstandard Elements on page 84. Also, refer to page 3 for selection.)

### Sintered Metal Filter Elements

- **Outstanding mechanical strength, heat resistance and chemical resistance.**
- **Formed by sintering finely powdered metal, so a high filtration accuracy can be obtained.**
- **Even if clogging progresses, the element can be reused by cleaning.**
- **Main applications**
  Ideal as a check filter for keeping fluid clean. All types of gases, fluids, general solvents and high-temperature fluids

- **Caution**
  The bronze element may be discolored by the moisture included in the atmosphere, but this does not affect the characteristics.

### Specifications

| Material | | Bronze | Stainless steel 316 |
|---|---|---|---|
| Operating temperature (C°) Note 2) | | 0 to 150 | 0 to 150 |
| Nominal filtration accuracy (μm) Note 3) | | 1, 2, 5, 10, 20, 40, 70, 100, 120 | |
| Max. differential pressure resistance | | 0.7 MPa | |
| Element replacement differential pressure | | 0.1 MPa | |
| Chemical resistance | Acid | Cannot be used. | Can be used. Note 1) |
| | Alkali | Cannot be used. | Can be used. |
| Element category of How to Order | | B | S |

Note 1) Cannot be used with hydrochloric acid, hydrofluoric acid or phosphoric acid.
Note 2) Varies depending on the seal material used.
Note 3) The name is for distinguishing the raw material, and is different from the actual filtration rating. (Refer to 11. Nominal filtration accuracy on page 118.)

## How to Order Elements

**E B 200 – 005 N**

**Element symbol**

**Element material**

| Symbol | Element material |
|---|---|
| B | Bronze |
| S | Stainless steel 316 |

**Element size**

| Symbol | Element size |
|---|---|
| 100 | ø65 x L250 |
| 200 | ø65 x L500 |
| 300 | ø65 x L750 |
| 400 | ø65 x L1000 |

**Seal material/Operating temperature range**

| Symbol | Seal material | Operating temperature range (°C) |
|---|---|---|
| A Note) | Non-asbestos | 0 to 150 |
| T | Fluororesin | 0 to 120 |
| N | NBR | 0 to 80 |
| V | FKM | 0 to 120 |

Note) Not possible with bronze elements.

**Nominal filtration accuracy (μm)**

| Symbol | Nominal filtration accuracy (μm) |
|---|---|
| 001 | 1 |
| 002 | 2 |
| 005 | 5 |
| 010 | 10 |
| 020 | 20 |
| 040 | 40 |
| 070 | 70 |
| 100 | 100 |
| 120 | 120 |

### Fiber Elements

- **Four types of materials with different characteristics are available so the filters are applicable to any application.**
- **Elements are economical because particle capturing capacity is excellent, and element life is long.**
- **Elements are disposable so maintenance and replacement are easy.**
- **Main applications**

| | |
|---|---|
| Cotton | Cleaning water, General neutral fluids, General solvents, Dry air |
| Polypropylene | Plating fluids, General acids, Alkali fluids, Industrial water, Cooling water |
| Glass fiber | Acid fluids, High-temperature fluids |

### Specifications

| Material | Core material | Operating temperature (°C) | Nominal filtration accuracy (μm) | Differential pressure resistance (Max.) | Element replacement differential pressure |
|---|---|---|---|---|---|
| Cotton | Stainless steel 304 | –20 to 100 | 0.5, 1, 5, 10, 20, 50, 75, 100 | 0.2 MPa | 0.1 MPa |
| Polypropylene | Polypropylene | 0 to 60 | 0.5, 1, 5, 10, 20, 50, 75, 100 | | |
| Glass fiber | Stainless steel 316 | 0 to 400 | 1, 5, 10, 20 | | |

Note) Size for all is ø65 x L250. Different lengths are available as a special order up to 750 mm, only for cotton and polypropylene.

### Elements Part No. List

| Element material | | Cotton | Polypropylene | Glass fiber |
|---|---|---|---|---|
| Core material | | Stainless steel 304 | Polypropylene | Stainless steel 316 |
| Nominal filtration accuracy (μm) | 0.5 | **EH10G** | **EHM10A** | — |
| | 1 | **EH39R10GV** | **EHM39R10AY** | **EHK27R10S** |
| | 5 | **EH23R10GV** | **EHM23R10AY** | **EHK19R10S** |
| | 10 | **EH19R10GV** | **EHM19R10AY** | **EHK15R10S** |
| | 20 | **EH15R10G** | **EHM15R10A** | **EHK10R10S** |
| | 50 | **EH11R10G** | **EHM11R10A** | — |
| | 75 | **EH10R10G** | **EHM10R10A** | — |
| | 100 | **EH8R10G** | **EHM8R10A** | — |
| Element category of How to Order | | H | T | G |

Note) Element seals are not used for fiber elements.

# Standard Elements
## Paper / Micromesh

### Paper Elements

- **Cartridges are pleated for a large filtration area, and elements are economical due to their long service life.**
- **Main applications**
  Ideal for filtration of hydraulic oil, lubricating oil, fuel oil, oils for the liquid gas industry, dry inert gases, and dry air.

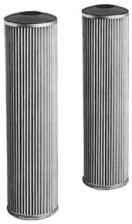

**Specifications**

| | |
|---|---|
| **Material** | Filter paper (Cotton, Phenol resin impregnated paper) |
| **Operating temperature (C°)** | 0 to 80 |
| **Nominal filtration accuracy (μm)** | 5, 10, 20 |
| **Max. differential pressure resistance** | 0.6 MPa |
| **Jointing material** | Epoxy resin |
| **Element replacement differential pressure** | 0.1 MPa |
| **Element category of How to Order** | P |

### How to Order Elements

**EP 200 – 010 N**

**Paper element**

**Element size**

| Symbol | Element size |
|---|---|
| **100** | ø65 x L250 |
| **200** | ø65 x L500 |
| **300** | ø65 x L750 |
| **400** | ø65 x L1000 |

**Nominal filtration accuracy (μm)**

| Symbol | Nominal filtration accuracy (μm) |
|---|---|
| **005** | 5 |
| **010** | 10 |
| **020** | 20 |

**Seal material**

| Symbol | Seal material |
|---|---|
| **N** | NBR |
| **V** | FKM |

### Micromesh Elements

- **Stainless steel metal mesh has high filtration accuracy.**
- **Outstanding heat and chemical resistance. Applicable to a wide range of applications.**
- **Pleated type has 3 times the filtration area of a cylinder.**
- **Filters are economical because they can be cleaned and repeatedly used.**
- **Main applications**
  Please use 40 microns or less as a high-precision filter, and 74 microns or higher as a high-grade strainer. All types of gases and fluids, high-temperature fluids.

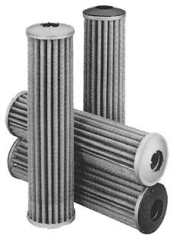

**Specifications**

| Model | | EM100 | EM500 |
|---|---|---|---|
| **Materials** | | Stainless steel 304 | Stainless steel 316 |
| **Jointing material** | | Epoxy resin | — |
| **Operating temperature (C°)** Note 2) | | 0 to 100 | 0 to 150 |
| **Nominal filtration accuracy (μm)** | | 5, 10, 20, 40, 74, 105 | |
| **Max. differential pressure resistance** | | 0.7 MPa | |
| **Element replacement differential pressure** | | 0.1 MPa | |
| **Chemical resistance** | **Acid** | Cannot be used. | Can be used. Note 1) |
| | **Alkali** | Can be used. | Can be used. |
| **Element category of How to Order** | | M | L |

Note 1) Cannot be used with hydrochloric acid, hydrofluoric acid or phosphoric acid.
Note 2) Varies depending on the seal material used.

### How to Order Elements

**EM 500 – 074 A**

**Micromesh element symbol**

**Group symbol**

| Symbol | Group symbol |
|---|---|
| **100** | Stainless steel 304 |
| **500** | Stainless steel 316 |

**Nominal filtration accuracy (μm)**

| Symbol | Nominal filtration accuracy (μm) |
|---|---|
| **005** | 5 |
| **010** | 10 |
| **020** | 20 |
| **040** | 40 |
| **074** | 74 |
| **105** | 105 |

(Size ø65 x L250)

**Seal material/Operating temperaturerange**

| Symbol | Seal material | Operating temperature range (°C) |
|---|---|---|
| **A** Note) | Non-asbestos | 0 to 150 |
| **T** Note) | Fluororesin | 0 to 120 |
| **N** | NBR | 0 to 80 |
| **V** | FKM | 0 to 120 |

Note) Not possible with EM100 (Stainless steel 304)